molex
one company › a world of innovation

This document was generated on 04/12/2010

PLEASE CHECK WWW.MOLEX.COM FOR LATEST PART INFORMATION

Part Number: 0022232121

Status: Active

Description: 2.54mm (.100") Pitch KK® Solid Header, Vertical, with Friction Lock, 12 Circuits, Tin (Sn) Plating

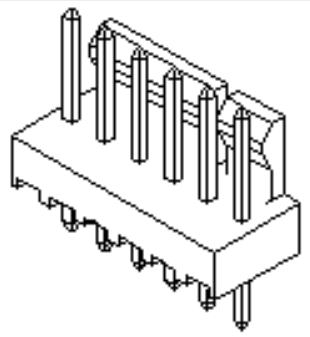

Series image - Reference only

Documents:

3D Model
Drawing (PDF)
Product Specification PS-10-07 (PDF)
RoHS Certificate of Compliance (PDF)

Agency Certification

CSA	LR19980
UL	E29179

General

Product Family	PCB Headers
Series	6373
Application	Wire-to-Board
Product Name	KK®

Physical

Breakaway	No
Circuits (Loaded)	12
Circuits (maximum)	12
Color - Resin	Natural (White)
Durability (mating cycles max)	25
First Mate / Last Break	No
Flammability	94V-0
Glow-Wire Compliant	No
Guide to Mating Part	No
Lock to Mating Part	Yes
Material - Metal	Brass
Material - Plating Mating	Tin
Material - Resin	Nylon
Number of Rows	1
Orientation	Vertical
PC Tail Length (in)	0.140 In
PC Tail Length (mm)	3.56 mm
PCB Locator	No
PCB Retention	None
PCB Thickness Recommended (in)	0.062 In
PCB Thickness Recommended (mm)	1.60 mm
Packaging Type	Bag
Pitch - Mating Interface (in)	0.100 In
Pitch - Mating Interface (mm)	2.54 mm
Polarized to Mating Part	Yes
Polarized to PCB	No
Shrouded	Partial
Stackable	No
Temperature Range - Operating	0°C to +75°C
Termination Interface: Style	Through Hole

Electrical

Current - Maximum per Contact	4A
Voltage - Maximum	250V

Solder Process Data

Duration at Max. Process Temperature (seconds)	5

EU RoHS
ELV and RoHS Compliant
REACH SVHC
Not Reviewed
Halogen-Free Status
Halogen-Free

China RoHS

Need more information on product environmental compliance?

Email productcompliance@molex.com
For a multiple part number RoHS Certificate of Compliance, click here

Please visit the Contact Us section for any non-product compliance questions.

Search Parts in this Series
6373Series

Mates With
2695 , 6471 , 7880 , 4455 , 7720

Lead-free Process Capability	Wave Capable (TH only)
Max. Cycles at Max. Process Temperature	1
Process Temperature max. C	235

Material Info

Old Part Number	A-6373-12A102

Reference - Drawing Numbers

Product Specification	PS-10-07
Sales Drawing	SD-6373-001

This document was generated on 04/12/2010

PLEASE CHECK WWW.MOLEX.COM FOR LATEST PART INFORMATION

CKT	A	B	SLOTS LOCATION
02	5.08 / .200	2.54±0.05 / .100±.002	NONE
03	7.62 / .300	5.08±0.10 / .200±.004	NONE
04	10.16 / .400	7.62±0.13 / .300±.005	NONE
05	12.70 / .500	10.16±0.13 / .400±.005	NONE
06	15.24 / .600	12.70±0.13 / .500±.005	4, 5
07	17.78 / .700	15.24±0.13 / .600±.005	4, 5
08	20.32 / .800	17.78±0.15 / .700±.006	4, 5
09	22.86 / .900	20.32±0.15 / .800±.006	4, 5
10	25.40 / 1.000	22.86±0.15 / .900±.006	4, 5
11	27.94 / 1.100	25.40±0.18 / 1.000±.007	4, 5, 8, 9
12	30.48 / 1.200	27.94±0.18 / 1.100±.007	4, 5, 8, 9
13	33.02 / 1.300	30.48±0.18 / 1.200±.007	4, 5, 8, 9
14	35.56 / 1.400	33.02±0.18 / 1.300±.007	4, 5, 8, 9
15	38.10 / 1.500	35.56±0.20 / 1.400±.008	4, 5, 12, 13
16	40.64 / 1.600	38.10±0.20 / 1.500±.008	4, 5, 12, 13
17	43.18 / 1.700	40.64±0.20 / 1.600±.008	4, 5, 12, 13
18	45.72 / 1.800	43.18±0.20 / 1.700±.008	4, 5, 12, 13
19	48.26 / 1.900	45.72±0.23 / 1.800±.009	4, 5, 16, 17
20	50.80 / 2.000	48.26±0.23 / 1.900±.009	4, 5, 16, 17
21	53.34 / 2.100	50.80±0.23 / 2.000±.009	4, 5, 16, 17
22	55.88 / 2.200	53.34±0.23 / 2.100±.009	4, 5, 16, 17
23	58.42 / 2.300	55.88±0.23 / 2.200±.009	4, 5, 20, 21
24	60.96 / 2.400	58.42±0.25 / 2.300±.010	4, 5, 20, 21
25	63.50 / 2.500	60.96±0.25 / 2.400±.010	4, 5, 20, 21
26	66.04 / 2.600	63.50±0.25 / 2.500±.010	4, 5, 20, 21
27	68.58 / 2.700	66.04±0.25 / 2.600±.010	4, 5, 24, 25
28	71.12 / 2.800	68.58±0.25 / 2.700±.010	4, 5, 24, 25

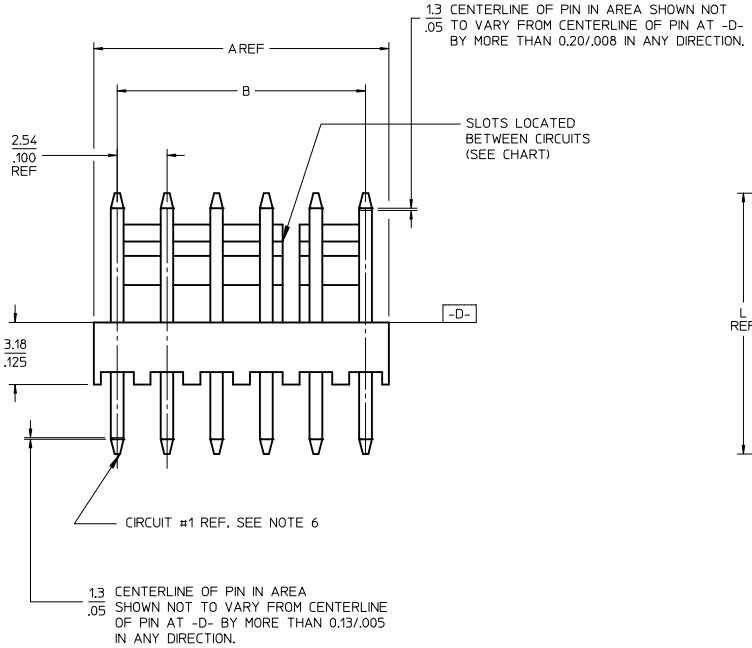

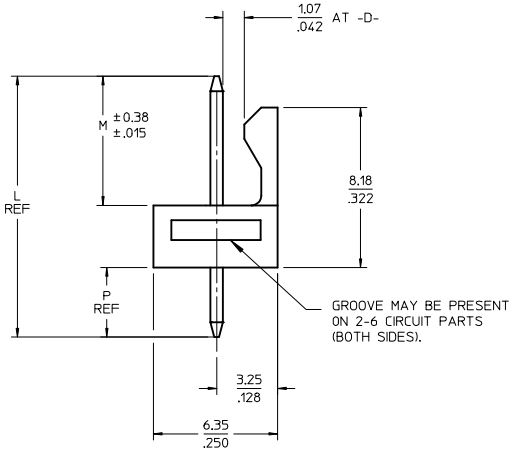

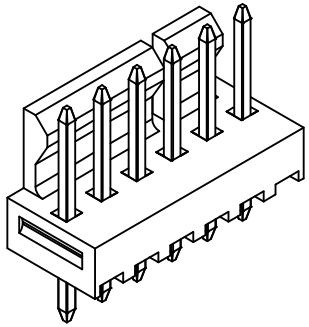

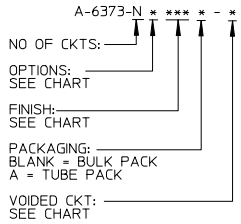

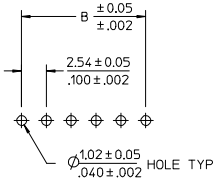

PCB LAYOUT: COMPONENT SIDE
TYPICAL PCB THICKNESS: 1.57/.062

NOTES:
1. MATERIAL: NYLON, UL 94V-0, COLOR - WHITE.
2. FINISH:
   (102) = OVERALL TIN: 0.00508/.000200 MIN OVER 0.00254/.000100 MIN COPPER.
   (122) = OVERALL TIN: 0.00381/.000150 MIN OVER 0.00076/.000030 MIN NICKEL.
   (501) = OVERALL GOLD: 0.00051/.000020 MIN OVER 0.00076/.000030 MIN NICKEL.
   (503) = OVERALL GOLD: 0.00076/.000030 MIN OVER 0.00127/.000050 MIN NICKEL.
   (509) = OVERALL GOLD: 0.00127/.000050 MIN OVER 0.00076/.000030 MIN NICKEL.
   (516) = OVERALL GOLD: 0.00025/.000010 MIN OVER 0.00076/.000030 MIN NICKEL.
3. PRODUCT SPECIFICATION AND PROCESS PARAMETERS: PS-10-07.
4. PACKAGING INFORMATION: SEE LEGEND.
5. PARTS ARE STACKABLE END TO END ON 2.54/.100 CENTERS.
6. CIRCUIT ONE DESIGNATION IS USED TO DEFINE VOID LOCATION. CIRCUIT ONE MAY OR MAY NOT LINE UP WITH CIRCUIT ONE ON THE MATING HOUSING.
7. PIN PUSHOUT FORCE: 2 LBS MIN.
8. FOR PIN DIMENSIONS, SEE APPLICABLE DRAWING.
9. THIS PART CONFORMS TO CLASS B REQUIREMENTS OF COSMETIC SPECIFICATION PS-45499-002.

SHT	REV	DESCRIPTION
2-*	BA9	ADD GROOVE
1	BC	EC NO: UCP2009-0785
		DRWN:MKIPPER 2008/12/29
		CHKD:SSOUSEK 2009/01/30
		APPR:FSMITH 2009/01/30
	BC	

QUALITY SYMBOLS: ▼=0 ▽C=0

GENERAL TOLERANCES (UNLESS SPECIFIED)

	mm	INCH
4 PLACES	± ---	± ---
3 PLACES	± ---	± .010
2 PLACES	± 0.25	± .015
1 PLACE	± 0.38	± ---
ANGULAR ±1/2°		

DRAFT WHERE APPLICABLE MUST REMAIN WITHIN DIMENSIONS

DIMENSION STYLE: MM/IN
SCALE: 4:1
DESIGN UNITS: INCH
THIRD ANGLE PROJECTION

DRAWN BY	SAMIEC	DATE 2004/03/31
CHECKED BY	SAMIEC	DATE 2004/03/31
APPROVED BY	MARGULIS	DATE 2004/03/31
MATERIAL NO.	SEE CHART	

TITLE: KK 100 HEADER ASSEMBLY FRICTION LOCK SOLID BODY

molex MOLEX INCORPORATED

DOCUMENT NO. SD-6373-001

SHEET NO. 1 OF *

SIZE B

THIS DRAWING CONTAINS INFORMATION THAT IS PROPRIETARY TO MOLEX INCORPORATED AND SHOULD NOT BE USED WITHOUT WRITTEN PERMISSION

GROUP:	A-6373-NA102-*
PIN NUMBER:	2766-1(102)
PIN LENGTH: L	.560 / (14.22)
MATING: M	.295 / (7.49)
PC TAIL: P	.140 / (3.56)
PACKAGING:	PK-6373-001 BULK

CKT	MATERIAL NUMBER	ENG NUMBER	CKT	MATERIAL NUMBER	ENG NUMBER	VOID CKT	CKT	MATERIAL NUMBER	ENG NUMBER	VOID CKT	CKT	MATERIAL NUMBER	ENG NUMBER	VOID CKT
2	22-23-2021	A-6373-02A102	9	22-04-5094	A-6373-09A102-4	4	11	22-04-5117	A-6373-11A102-7	7	07	22-04-5076	A-6373-07A102-2	2
3	22-23-2031	A-6373-03A102	9	22-04-5096	A-6373-09A102-6	6	06	22-04-5063	A-6373-06A102-3	3	07	22-04-5077	A-6373-07A102-6	6
4	22-23-2041	A-6373-04A102	11	22-04-5114	A-6373-11A102-4	4	10	22-04-5101	A-6373-10A102-1	1	06	22-04-5069	A-6373-06A102-54	4, 5
5	22-23-2051	A-6373-05A102	11	22-04-5118	A-6373-11A102-8	8	10	22-04-5102	A-6373-10A102-2	2	25	22-04-5252	A-6373-25A102-2	2
6	22-23-2061	A-6373-06A102	08	22-04-5083	A-6373-08A102-3	3	10	22-04-5103	A-6373-10A102-3	3	08	22-04-5086	A-6373-08A102-6	6
7	22-23-2071	A-6373-07A102	08	22-04-5082	A-6373-08A102-2	2	15	22-04-5154	A-6373-15A102-14	14	08	22-04-5087	A-6373-08A102-52	2,3,5,6,7
8	22-23-2081	A-6373-08A102	10	22-04-5106	A-6373-10A102-6	6	05	22-04-5052	A-6373-05A102-2	2	10	22-04-5105	A-6373-10A102-5	5
9	22-23-2091	A-6373-09A102	04	22-04-5043	A-6373-04A102-3	3	08	22-04-5084	A-6373-08A102-4	4	05	22-04-5057	A-6373-05A102-52	2, 4
10	22-23-2101	A-6373-10A102	08	22-04-5081	A-6373-08A102-51	2,4,6	06	22-04-5064	A-6373-06A102-4	4	19	22-04-5198	A-6373-19A102-8	8
11	22-23-2111	A-6373-11A102	09	22-04-5093	A-6373-09A102-3	3	03	22-04-5031	A-6373-03A102-1	1	11	22-04-5119	A-6373-11A102-51	2,4,6,8,10
12	22-23-2121	A-6373-12A102	08	22-04-5085	A-6373-08A102-5	5	05	22-04-5053	A-6373-05A102-3	3	12	22-04-5129	A-6373-12A102-11	11
13	22-23-2131	A-6373-13A102	06	22-04-5065	A-6373-06A102-5	5	11	22-04-5116	A-6373-11A102-6	6	08	22-04-5088	A-6373-08A102-53	4, 6
14	22-23-2141	A-6373-14A102	07	22-04-5072	A-6373-07A102-52	2,4,6	07	22-04-5074	A-6373-07A102-4	4	04	22-04-5044	A-6373-04A102-4	4
15	22-23-2151	A-6373-15A102	06	22-04-5062	A-6373-06A102-2	2	10	22-04-5079	A-6373-10A102-52	2,3,5,6,8,9	27	22-04-5277	A-6373-27A102-51	3,7,9,11,14, 16, 21, 23
16	22-23-2161	A-6373-16A102	07	22-04-5071	A-6373-07A102-51	2,3,5,6	04	22-04-5049	A-6373-04A102-51	2,3				
17	22-23-2171	A-6373-17A102	10	22-04-5100	A-6373-10A102-10	10	04	22-04-5048	A-6373-04A102-52	2,4	11	22-04-5115	A-6373-11A102-52	5, 6
18	22-23-2181	A-6373-18A102	10	22-04-5109	A-6373-10A102-9	9	04	22-04-5041	A-6373-04A102-1	1	24	22-23-3245	A-6373-24A102-23	23
19	22-23-2191	A-6373-19A102	10	22-04-5108	A-6373-10A102-8	8	03	22-04-5032	A-6373-03A102-2	2	11	22-23-3115	A-6373-11A102-10	10
20	22-23-2201	A-6373-20A102	05	22-04-5054	A-6373-05A102-4	4	13	22-04-5139	A-6373-13A102-9	9	15	22-23-3155	A-6373-15A102-15	15
21	22-23-2211	A-6373-21A102	03	22-04-5033	A-6373-03A102-3	3	12	22-04-5126	A-6373-12A102-6	6	08	22-04-5089	A-6373-08A102-54	2, 5
22	22-23-2221	A-6373-22A102	07	22-04-5075	A-6373-07A102-5	5	13	22-04-5131	A-6373-13A102-51	2,3,5,6,8, 9,11,12	06	22-23-2069	A-6373-06A102-55	2,3,4,5
23	22-23-2231	A-6373-23A102	07	22-04-5073	A-6373-07A102-3	3	06	22-04-5066	A-6373-06A102-52	3,5	07	22-23-2079	A-6373-07A102-53	2,3,4,5,6
24	22-23-2241	A-6373-24A102	14	22-04-5149	A-6373-14A102-9	9	05	22-04-5056	A-6373-05A102-51	1,3,5	13	22-23-1137	A-6373-13A102-53	3,6,10,12
25	22-23-2251	A-6373-25A102	15	22-04-5152	A-6373-15A102-2	2	06	22-04-5067	A-6373-06A102-53	1, 5	10	22-23-1107	A-6373-10A102-53	4,7
26	22-23-2261	A-6373-26A102	11	50-29-1594	A-6373-11A102-53	2,3,4,5,7, 8,9,10	06	22-04-5068	A-6373-06A102-6	6	18	22-23-1187	A-6373-18A102-5	5
27	22-23-2271	A-6373-27A102					02	22-04-5021	A-6373-02A102-1	1	18	22-23-1188	A-6373-18A102-7	7
28	22-23-2281	A-6373-28A102	13	22-04-5132	A-6373-13A102-52	8, 9	04	22-04-5042	A-6373-04A102-2	2	12	50-29-0096	A-6373-12A102-8	8

REV:	ECR/ECN INFORMATION:	TITLE:	SHEET No.
BA9	EC No.: **UCP2007-1744** DATE: **1/24/2007**	**KK 100 HEADER ASSEMBLY FRICTION LOCK SOLID BODY**	**- 2 -**

DOCUMENT NUMBER:	CREATED / REVISED BY:	CHECKED BY:	APPROVED BY:
SD - 6373 - 001	**ADERR**	**LSCHMIDT**	**FSMITH**

GROUP:	A-6373-NC102-*
PIN NUMBER:	2766-43(102)
PIN LENGTH: L	.530 / (13.46)
MATING: M	.260 / (6.60)
PC TAIL: P	.145 / (3.68)
PACKAGING:	PK-6373-001 BULK

CKTS	MATERIAL NUMBER	ENG NUMBER	CKTS	MATERIAL NUMBER	ENG NUMBER	VOID CKT
2	22-23-2023	A-6373-02C102				
3	22-23-2033	A-6373-03C102				
4	22-23-2043	A-6373-04C102				
5	22-23-2053	A-6373-05C102				
6	22-23-2063	A-6373-06C102				
7	22-23-2073	A-6373-07C102				
8	22-23-2083	A-6373-08C102				
9	22-23-2093	A-6373-09C102				
10	22-23-2103	A-6373-10C102				
11	22-23-2113	A-6373-11C102				
12	22-23-2123	A-6373-12C102				
13	22-23-2133	A-6373-13C102				
14	22-23-2143	A-6373-14C102				
15	22-23-2153	A-6373-15C102				
16	22-23-2163	A-6373-16C102				
17	22-23-2173	A-6373-17C102				
18	22-23-2183	A-6373-18C102				
19	22-23-2193	A-6373-19C102				
20	22-23-2203	A-6373-20C102				
21	22-23-2213	A-6373-21C102				
22	22-23-2223	A-6373-22C102				
23	22-23-2233	A-6373-23C102				
24	22-23-2243	A-6373-24C102				
25	22-23-2253	A-6373-25C102				
26	22-23-2263	A-6373-26C102				
27	22-23-2273	A-6373-27C102				
28	22-23-2283	A-6373-28C102				

GROUP:	A-6373-NV503-*
PIN NUMBER:	2766-43(503)
PIN LENGTH: L	.530 / (13.46)
MATING: M	.295 / (7.49)
PC TAIL: P	.110 / (2.79)
PACKAGING:	PK-6373-001

CKTS	MATERIAL NUMBER	ENG NUMBER	CKTS	MATERIAL NUMBER	ENG NUMBER	VOID CKT
2	22-15-3029	A-6373-02V503				
3	22-15-3039	A-6373-03V503				
4	22-15-3049	A-6373-04V503				
5	22-15-3059	A-6373-05V503				
6	22-15-3069	A-6373-06V503				
7	22-15-3079	A-6373-07V503				
8	22-15-3089	A-6373-08V503				
9	22-15-3099	A-6373-09V503				
10	22-15-3109	A-6373-10V503				
11	22-15-3119	A-6373-11V503				
12	22-15-3129	A-6373-12V503				
13	22-15-3139	A-6373-13V503				
14	22-15-3149	A-6373-14V503				
15	22-15-3159	A-6373-15V503				
16	22-15-3169	A-6373-16V503				
17	22-15-3179	A-6373-17V503				
18	22-15-3189	A-6373-18V503				
19	22-15-3199	A-6373-19V503				
20	22-15-3209	A-6373-20V503				
21	22-15-3219	A-6373-21V503				
22	22-15-3229	A-6373-22V503				
23	22-15-3239	A-6373-23V503				
24	22-15-3249	A-6373-24V503				
25	22-15-3259	A-6373-25V503				
26	22-15-3269	A-6373-26V503				
27	22-15-3279	A-6373-27V503				
28	22-15-3289	A-6373-28V503				

REV:	ECR/ECN INFORMATION:	TITLE:	SHEET No.
BA9	EC No.: **UCP2007-1744** DATE: **1/24/2007**	**KK 100 HEADER ASSEMBLY FRICTION LOCK SOLID BODY**	**- 3 -**

DOCUMENT NUMBER:	CREATED / REVISED BY:	CHECKED BY:	APPROVED BY:
SD - 6373 - 001	**ADERR**	**LSCHMIDT**	**FSMITH**

GROUP:	A-6373-NE102-*
PIN NUMBER:	2766-13(102)
PIN LENGTH: L	.750 / (19.05)
MATING: M	.260 / (6.60)
PC TAIL: P	.365 / (9.27)
PACKAGING:	PK-6373-001

CKTS	MATERIAL NUMBER	ENG NUMBER	CKTS	MATERIAL NUMBER	ENG NUMBER	VOID CKT
2	22-23-2025	A-6373-02E102				
3		A-6373-03E102				
4		A-6373-04E102				
5	22-23-2055	A-6373-05E102				
6	22-23-2065	A-6373-06E102				
7		A-6373-07E102				
8		A-6373-08E102				
9		A-6373-09E102				
10	22-23-2105	A-6373-10E102				
11		A-6373-11E102				
12		A-6373-12E102				
13		A-6373-13E102				
14		A-6373-14E102				
15	22-23-2155	A-6373-15E102				
16		A-6373-16E102				
17		A-6373-17E102				
18		A-6373-18E102				
19		A-6373-19E102				
20		A-6373-20E102				
21		A-6373-21E102				
22		A-6373-22E102				
23		A-6373-23E102				
24		A-6373-24E102				
25		A-6373-25E102				
26		A-6373-26E102				
27		A-6373-27E102				
28		A-6373-28E102				

GROUP:	A-6373-NY516-*
PIN NUMBER:	2766-28(516)
PIN LENGTH: L	.625 / (15.88)
MATING: M	.313 / (7.95)
PC TAIL: P	.187 / (4.75)
PACKAGING:	PK-6373-001 BULK

CKTS	MATERIAL NUMBER	ENG NUMBER	CKTS	MATERIAL NUMBER	ENG NUMBER	VOID CKT
2	22-11-2026	A-6373-02Y516				
3	22-11-2036	A-6373-03Y516				
4	22-11-2046	A-6373-04Y516				
5	22-11-2056	A-6373-05Y516				
6	22-11-2066	A-6373-06Y516				
7	22-11-2076	A-6373-07Y516				
8	22-11-2086	A-6373-08Y516				
9	22-11-2096	A-6373-09Y516				
10	22-11-2106	A-6373-10Y516				
11	22-11-2116	A-6373-11Y516				
12	22-11-2126	A-6373-12Y516				
13	22-11-2136	A-6373-13Y516				
14	22-11-2146	A-6373-14Y516				
15	22-11-2156	A-6373-15Y516				
16	22-11-2166	A-6373-16Y516				
17	22-11-2176	A-6373-17Y516				
18	22-11-2186	A-6373-18Y516				
19	22-11-2196	A-6373-19Y516				
20	22-11-2206	A-6373-20Y516				
21	22-11-2216	A-6373-21Y516				
22	22-11-2226	A-6373-22Y516				
23	22-11-2236	A-6373-23Y516				
24	22-11-2246	A-6373-24Y516				
25	22-11-2256	A-6373-25Y516				
26	22-11-2266	A-6373-26Y516				
27	22-11-2276	A-6373-27Y516				
28	22-11-2286	A-6373-28Y516				

REV:	ECR/ECN INFORMATION:	TITLE:	SHEET No.
BA9	EC No.: **UCP2007-1744** DATE: **1/24/2007**	**KK 100 HEADER ASSEMBLY FRICTION LOCK SOLID BODY**	**- 4 -**

DOCUMENT NUMBER:	CREATED / REVISED BY:	CHECKED BY:	APPROVED BY:
SD - 6373 - 001	**ADERR**	**LSCHMIDT**	**FSMITH**

GROUP:	A-6373-NA501-*
PIN NUMBER:	2766-1(501)
PIN LENGTH: L	.560 / (14.22)
MATING: M	.295 / (7.49)
PC TAIL: P	.140 / (3.56)
PACKAGING:	PK-6373-001 BULK

CKTS	MATERIAL NUMBER	ENG NUMBER	CKTS	MATERIAL NUMBER	ENG NUMBER	VOID CKT
2	22-11-2022	A-6373-02A501	04	22-04-6044	A-6373-04A501-2	2
3	22-11-2032	A-6373-03A501	04	22-11-2043	A-6373-04A501-3	3
4	22-11-2042	A-6373-04A501	03	22-11-2037	A-6373-03A501-2	2
5	22-11-2052	A-6373-05A501	24	22-11-2247	A-6373-24A501-5	5
6	22-11-2062	A-6373-06A501	24	22-11-2248	A-6373-24A501-17	17
7	22-11-2072	A-6373-07A501	08	22-11-2087	A-6373-08A501-5	5
8	22-11-2082	A-6373-08A501	06	22-04-6064	A-6373-06A501-5	5
9	22-11-2092	A-6373-09A501	06	22-04-6065	A-6373-06A501-4	4
10	22-11-2102	A-6373-10A501	07	22-04-6074	A-6373-07A501-1	1
11	22-11-2112	A-6373-11A501	12	22-04-6124	A-6373-12A501-11	11
12	22-11-2122	A-6373-12A501	20	22-04-6204	A-6373-20A501-19	19
13	22-11-2132	A-6373-13A501	10	22-04-6104	A-6373-10A501-2	2
14	22-11-2142	A-6373-14A501	08	22-04-6084	A-6373-08A501-6	6
15	22-11-2152	A-6373-15A501	09	22-04-6094	A-6373-09A501-4	4
16	22-11-2162	A-6373-16A501	24	22-04-6244	A-6373-24A501-23	23
17	22-11-2172	A-6373-17A501	05	22-04-6054	A-6373-05A501-4	4
18	22-11-2182	A-6373-18A501				
19	22-11-2192	A-6373-19A501				
20	22-11-2202	A-6373-20A501				
21	22-11-2212	A-6373-21A501				
22	22-11-2222	A-6373-22A501				
23	22-11-2232	A-6373-23A501				
24	22-11-2242	A-6373-24A501				
25	22-11-2252	A-6373-25A501				
26	22-11-2262	A-6373-26A501				
27	22-11-2272	A-6373-27A501				
28	22-11-2282	A-6373-28A501				

GROUP:	A-6373-NA102-* (continued)
PIN NUMBER:	2766-1(102)
PIN LENGTH: L	.560 / (14.22)
MATING: M	.295 / (7.49)
PC TAIL: P	.140 / (3.56)
PACKAGING:	PK-6373-001 BULK

CKTS	MATERIAL NUMBER	ENG NUMBER	CKTS	MATERIAL NUMBER	ENG NUMBER	VOID CKT
2			13	50-29-1611	A-6373-13A102-54	2,3,4,6,7 8,10,11,12
3			16	22-23-1189	A-6373-16A102-2	2
4			10	22-04-5107	A-6373-10A102-7	7
5			16	22-23-2165	A-6373-16A102-15	15
6			10	22-04-5110	A-6373-10A102-4	4
7			09	50-29-1766	A-6373-09A102-8	8
8			09	50-29-1769	A-6373-09A102-2	2
9						
10						
11						
12						
13						
14						
15						
16						
17						
18						
19						
20						
21						
22						
23						
24						
25						
26						
27						
28						

REV:	ECR/ECN INFORMATION:	TITLE:	SHEET No.
BA9	EC No.: **UCP2007-1744** DATE: **1/24/2007**	**KK 100 HEADER ASSEMBLY FRICTION LOCK SOLID BODY**	**- 5 -**

DOCUMENT NUMBER:	CREATED / REVISED BY:	CHECKED BY:	APPROVED BY:
SD - 6373 - 001	**ADERR**	**LSCHMIDT**	**FSMITH**

GROUP:	A-6373-NAB102-*
PIN NUMBER:	2766-54(102)
PIN LENGTH: L	.703 / (17.86)
MATING: M	.289 / (7.34)
PC TAIL: P	.289 / (7.34)
PACKAGING:	PK-6373-001 BULK

CKTS	MATERIAL NUMBER	ENG NUMBER	CKTS	MATERIAL NUMBER	ENG NUMBER	VOID CKT
2		A-6373-02AB102				
3	50-29-0052	A-6373-03AB102				
4	50-29-0053	A-6373-04AB102				
5		A-6373-05AB102				
6		A-6373-06AB102				
7		A-6373-07AB102				
8	50-29-0057	A-6373-08AB102				
9		A-6373-09AB102				
10	50-29-0058	A-6373-10AB102				
11		A-6373-11AB102				
12		A-6373-12AB102				
13		A-6373-13AB102				
14		A-6373-14AB102				
15		A-6373-15AB102				
16		A-6373-16AB102				
17		A-6373-17AB102				
18		A-6373-18AB102				
19		A-6373-19AB102				
20		A-6373-20AB102				
21		A-6373-21AB102				
22		A-6373-22AB102				
23		A-6373-23AB102				
24		A-6373-24AB102				
25		A-6373-25AB102				
26		A-6373-26AB102				
27		A-6373-27AB102				
28		A-6373-28AB102				

GROUP:	A-6373-NA509-*
PIN NUMBER:	2766-1(509)
PIN LENGTH: L	.560 / 14.22)
MATING: M	.295 / (7.49)
PC TAIL: P	.140 / (3.56)
PACKAGING:	PK-6373-001 BULK

CKTS	MATERIAL NUMBER	ENG NUMBER	CKTS	MATERIAL NUMBER	ENG NUMBER	VOID CKT
2	22-04-5022	A-6373-02A509				
3		A-6373-03A509				
4		A-6373-04A509				
5		A-6373-05A509				
6		A-6373-06A509				
7		A-6373-07A509				
8		A-6373-08A509				
9		A-6373-09A509				
10		A-6373-10A509				
11		A-6373-11A509				
12		A-6373-12A509				
13		A-6373-13A509				
14		A-6373-14A509				
15		A-6373-15A509				
16		A-6373-16A509				
17		A-6373-17A509				
18		A-6373-18A509				
19		A-6373-19A509				
20		A-6373-20A509				
21		A-6373-21A509				
22		A-6373-22A509				
23		A-6373-23A509				
24		A-6373-24A509				
25		A-6373-25A509				
26		A-6373-26A509				
27		A-6373-27A509				
28		A-6373-28A509				

REV:	ECR/ECN INFORMATION:	TITLE:	SHEET No.
BA9	EC No.: **UCP2007-1744** DATE: **1/24/2007**	**KK 100 HEADER ASSEMBLY FRICTION LOCK SOLID BODY**	**- 6 -**

DOCUMENT NUMBER:	CREATED / REVISED BY:	CHECKED BY:	APPROVED BY:
SD - 6373 - 001	**ADERR**	**LSCHMIDT**	**FSMITH**

GROUP:	A-6373-NAH501-*
PIN NUMBER:	2766-1(501)
PIN LENGTH: L	.560 / (14.22)
MATING: M	.260 / (6.60)
PC TAIL: P	.175 / (4.45)
PACKAGING:	PK-6373-001 BULK

CKTS	MATERIAL NUMBER	ENG NUMBER	CKTS	MATERIAL NUMBER	ENG NUMBER	VOID CKT
2	22-23-6024	A-6373-02AH501				
3	22-23-6034	A-6373-03AH501				
4	22-23-6044	A-6373-04AH501				
5	22-23-6054	A-6373-05AH501				
6	22-23-6064	A-6373-06AH501				
7	22-23-6074	A-6373-07AH501				
8	22-23-6084	A-6373-08AH501				
9	22-23-6094	A-6373-09AH501				
10	22-23-6104	A-6373-10AH501				
11	22-23-6114	A-6373-11AH501				
12	22-23-6124	A-6373-12AH501				
13	22-23-6134	A-6373-13AH501				
14	22-23-6144	A-6373-14AH501				
15	22-23-6154	A-6373-15AH501				
16	22-23-6164	A-6373-16AH501				
17	22-23-6174	A-6373-17AH501				
18	22-23-6184	A-6373-18AH501				
19	22-23-6194	A-6373-19AH501				
20	22-23-6204	A-6373-20AH501				
21	22-23-6214	A-6373-21AH501				
22	22-23-6224	A-6373-22AH501				
23	22-23-6234	A-6373-23AH501				
24	22-23-6244	A-6373-24AH501				
25	22-23-6254	A-6373-25AH501				
26	22-23-6264	A-6373-26AH501				
27	22-23-6274	A-6373-27AH501				
28	22-23-6284	A-6373-28AH501				

GROUP:	A-6373-NA503-*
PIN NUMBER:	2766-1(503)
PIN LENGTH: L	.560 / 14.22)
MATING: M	.295 / (7.49)
PC TAIL: P	.140 / (3.56
PACKAGING:	PK-6373-001 BULK

CKTS	MATERIAL NUMBER	ENG NUMBER	CKTS	MATERIAL NUMBER	ENG NUMBER	VOID CKT
2	22-11-2028	A-6373-02A503	09	22-11-2095	A-6373-09A503-3	3
3	22-11-2038	A-6373-03A503	09	22-11-2097	A-6373-09A503-5	5
4	22-11-2048	A-6373-04A503	05	22-11-2055	A-6373-05A503-3	3
5	22-11-2058	A-6373-05A503	11	22-11-2117	A-6373-11A503-5	5
6	22-11-2068	A-6373-06A503				
7	22-11-2078	A-6373-07A503				
8	22-11-2088	A-6373-08A503				
9	22-11-2098	A-6373-09A503				
10	22-11-2108	A-6373-10A503				
11	22-11-2118	A-6373-11A503				
12	22-11-2128	A-6373-12A503				
13	22-11-2138	A-6373-13A503				
14	22-11-2148	A-6373-14A503				
15		A-6373-15A503				
16		A-6373-16A503				
17	22-11-2178	A-6373-17A503				
18		A-6373-18A503				
19		A-6373-19A503				
20		A-6373-20A503				
21		A-6373-21A503				
22	22-11-2228	A-6373-22A503				
23		A-6373-23A503				
24		A-6373-24A503				
25		A-6373-25A503				
26		A-6373-26A503				
27		A-6373-27A503				
28		A-6373-28A503				

REV:	ECR/ECN INFORMATION:	TITLE:	SHEET No.
BA9	EC No.: **UCP2007-1744** DATE: **1/24/2007**	**KK 100 HEADER ASSEMBLY FRICTION LOCK SOLID BODY**	**- 7 -**

DOCUMENT NUMBER:	CREATED / REVISED BY:	CHECKED BY:	APPROVED BY:
SD - 6373 - 001	**ADERR**	**LSCHMIDT**	**FSMITH**

GROUP:	A-6373-NAD102-*
PIN NUMBER:	4166-1(102)
PIN LENGTH: L	.560 / (14.22)
MATING: M	.295 / (7.49)
PC TAIL: P	.140 / (3.56)
PACKAGING:	PK-6373-001 BULK

CKTS	MATERIAL NUMBER	ENG NUMBER	CKTS	MATERIAL NUMBER	ENG NUMBER	VOID CKT
2	22-23-2028	A-6373-02AD102				
3	22-23-2038	A-6373-03AD102				
4	22-23-2048	A-6373-04AD102				
5	22-23-2058	A-6373-05AD102				
6	22-23-2068	A-6373-06AD102				
7	22-23-2078	A-6373-07AD102				
8	22-23-2088	A-6373-08AD102				
9	22-23-2098	A-6373-09AD102				
10	22-23-2108	A-6373-10AD102				
11	22-23-2118	A-6373-11AD102				
12	22-23-2128	A-6373-12AD102				
13	22-23-2138	A-6373-13AD102				
14	22-23-2148	A-6373-14AD102				
15	22-23-2158	A-6373-15AD102				
16	22-23-2168	A-6373-16AD102				
17	22-23-2178	A-6373-17AD102				
18	22-23-2188	A-6373-18AD102				
19	22-23-2198	A-6373-19AD102				
20	22-23-2208	A-6373-20AD102				
21	22-23-2218	A-6373-21AD102				
22	22-23-2228	A-6373-22AD102				
23	22-23-2238	A-6373-23AD102				
24	22-23-2248	A-6373-24AD102				
25	22-23-2258	A-6373-25AD102				
26	22-23-2268	A-6373-26AD102				
27	22-23-2278	A-6373-27AD102				
28	22-23-2288	A-6373-28AD102				

GROUP:	
PIN NUMBER:	
PIN LENGTH: L	
MATING: M	
PC TAIL: P	
PACKAGING:	

CKTS	MATERIAL NUMBER	ENG NUMBER	CKTS	MATERIAL NUMBER	ENG NUMBER	VOID CKT
2						
3						
4						
5						
6						
7						
8						
9						
10						
11						
12						
13						
14						
15						
16						
17						
18						
19						
20						
21						
22						
23						
24						
25						
26						
27						
28						

REV:	ECR/ECN INFORMATION:	TITLE:	SHEET No.
BA9	EC No.: **UCP2007-1744** DATE: **1/24/2007**	**KK 100 HEADER ASSEMBLY FRICTION LOCK SOLID BODY**	**- 8 -**

DOCUMENT NUMBER:	CREATED / REVISED BY:	CHECKED BY:	APPROVED BY:
SD - 6373 - 001	**ADERR**	**LSCHMIDT**	**FSMITH**

GROUP:	A-6373-NA122-*
PIN NUMBER:	2766-1(122)
PIN LENGTH L	.560 / (14.22)
MATING: M	.295 / (7.49)
PC TAIL: P	.140 / (3.56)
PACKAGING:	PK-6373-001 BULK

CKTS	MATERIAL NUMBER	ENG NUMBER	CKTS	MATERIAL NUMBER	ENG NUMBER	VOID CKT
2	22-23-2027	A-6373-02A122	5	22-04-6053	A-6373-05A122-3	3
3	22-23-2037	A-6373-03A122				
4	22-23-2047	A-6373-04A122				
5	22-23-2057	A-6373-05A122				
6	22-23-2067	A-6373-06A122				
7	22-23-2077	A-6373-07A122				
8	22-23-2087	A-6373-08A122				
9	22-23-2097	A-6373-09A122				
10	22-23-2107	A-6373-10A122				
11	22-23-2117	A-6373-11A122				
12	22-23-2127	A-6373-12A122				
13	22-23-2137	A-6373-13A122				
14	22-23-2147	A-6373-14A122				
15	22-23-2157	A-6373-15A122				
16	22-23-2167	A-6373-16A122				
17	22-23-2177	A-6373-17A122				
18	22-23-2187	A-6373-18A122				
19	22-23-2197	A-6373-19A122				
20	22-23-2207	A-6373-20A122				
21	22-23-2217	A-6373-21A122				
22	22-23-2227	A-6373-22A122				
23	22-23-2237	A-6373-23A122				
24	22-23-2247	A-6373-24A122				
25	22-23-2257	A-6373-25A122				
26	22-23-2267	A-6373-26A122				
27	22-23-2777	A-6373-27A122				
28	22-23-2287	A-6373-28A122				

GROUP:	A-6373-NA102A-*
PIN NUMBER:	2766-1(102)
PIN LENGTH: L	.560 / (14.22)
MATING: M	.295 / (7.49)
PC TAIL: P	.140 / (3.56)
PACKAGING:	PK-44743-001 BULK

CKTS	MATERIAL NUMBER	ENG NUMBER	CKTS	MATERIAL NUMBER	ENG NUMBER	VOID CKT
2	22-23-6021	A-6373-02A102A	10	22-23-6106	A-6373-10A102A-2	2
3	22-23-6031	A-6373-03A102A				
4	22-23-6041	A-6373-04A102A				
5	22-23-6051	A-6373-05A102A				
6	22-23-6061	A-6373-06A102A				
7	22-23-6071	A-6373-07A102A				
8	22-23-6081	A-6373-08A102A				
9	22-23-6091	A-6373-09A102A				
10	22-23-6101	A-6373-10A102A				
11	22-23-6111	A-6373-11A102A				
12	22-23-6121	A-6373-12A102A				
13	22-23-6131	A-6373-13A102A				
14	22-23-6141	A-6373-14A102A				
15	22-23-6151	A-6373-15A102A				
16	22-23-6161	A-6373-16A102A				
17	22-23-6171	A-6373-17A102A				
18	22-23-6181	A-6373-18A102A				
19	22-23-6191	A-6373-19A102A				
20	22-23-6201	A-6373-20A102A				
21	22-23-6211	A-6373-21A102A				
22	22-23-6221	A-6373-22A102A				
23	22-23-6231	A-6373-23A102A				
24	22-23-6241	A-6373-24A102A				
25	22-23-6251	A-6373-25A102A				
26	22-23-6261	A-6373-26A102A				
27	22-23-6271	A-6373-27A102A				
28	22-23-6281	A-6373-28A102A				

REV:	ECR/ECN INFORMATION:	TITLE:	SHEET No.
BA9	EC No.: **UCP2007-1744** DATE: **1/24/2007**	**KK 100 HEADER ASSEMBLY FRICTION LOCK SOLID BODY**	**- 9 -**

DOCUMENT NUMBER:	CREATED / REVISED BY:	CHECKED BY:	APPROVED BY:
SD - 6373 - 001	**ADERR**	**LSCHMIDT**	**FSMITH**

GROUP:	A-6373-NAF102-*
PIN NUMBER:	2766-39(102)
PIN LENGTH: L	.500 / (12.70)
MATING : M	.260 / (6.60)
PC TAIL: P	.115 / (2.92)
PACKAGING:	PK-6373-001

CKTS	MATERIAL NUMBER	ENG NUMBER	CKTS	MATERIAL NUMBER	ENG NUMBER	VOID CKT
2	22-23-2020	A-6373-02AF102				
3	22-23-2030	A-6373-03AF102				
4	22-23-2040	A-6373-04AF102				
5	22-23-2050	A-6373-05AF102				
6	22-23-2060	A-6373-06AF102				
7	22-23-2070	A-6373-07AF102				
8	22-23-2080	A-6373-08AF102				
9	22-23-2090	A-6373-09AF102				
10	22-23-2100	A-6373-10AF102				
11	22-23-2110	A-6373-11AF102				
12	22-23-2120	A-6373-12AF102				
13	22-23-2130	A-6373-13AF102				
14	22-23-2140	A-6373-14AF102				
15	22-23-2150	A-6373-15AF102				
16	22-23-2160	A-6373-16AF102				
17	22-23-2170	A-6373-17AF102				
18	22-23-2180	A-6373-18AF102				
19	22-23-2190	A-6373-19AF102				
20	22-23-2200	A-6373-20AF102				
21	22-23-2210	A-6373-21AF102				
22	22-23-2220	A-6373-22AF102				
23	22-23-2230	A-6373-23AF102				
24	22-23-2240	A-6373-24AF102				
25	22-23-2250	A-6373-25AF102				
26	22-23-2260	A-6373-26AF102				
27	22-23-2270	A-6373-27AF102				
28	22-23-2280	A-6373-28AF102				

GROUP:	A-6373-NAG102-*
PIN NUMBER:	2766-39(102)
PIN LENGTH: L	.500 / (12.70)
MATING: M	.301 / (7.65)
PC TAIL: P	.074 / (1.88)
PACKAGING:	PK-6373-001

CKTS	MATERIAL NUMBER	ENG NUMBER	CKTS	MATERIAL NUMBER	ENG NUMBER	VOID CKT
2	22-23-2022	A-6373-02AG102				
3	22-23-2032	A-6373-03AG102				
4	22-23-2042	A-6373-04AG102				
5	22-23-2052	A-6373-05AG102				
6	22-23-2062	A-6373-06AG102				
7	22-23-2072	A-6373-07AG102				
8	22-23-2082	A-6373-08AG102				
9	22-23-2092	A-6373-09AG102				
10	22-23-2102	A-6373-10AG102				
11	22-23-2112	A-6373-11AG102				
12	22-23-2122	A-6373-12AG102				
13	22-23-2132	A-6373-13AG102				
14	22-23-2142	A-6373-14AG102				
15	22-23-2152	A-6373-15AG102				
16	22-23-2162	A-6373-16AG102				
17	22-23-2172	A-6373-17AG102				
18	22-23-2182	A-6373-18AG102				
19	22-23-2192	A-6373-19AG102				
20	22-23-2202	A-6373-20AG102				
21	22-23-2212	A-6373-21AG102				
22	22-23-2222	A-6373-22AG102				
23	22-23-2232	A-6373-23AG102				
24	22-23-2242	A-6373-24AG102				
25	22-23-2252	A-6373-25AG102				
26	22-23-2262	A-6373-26AG102				
27	22-23-2272	A-6373-27AG102				
28	22-23-2282	A-6373-28AG102				

REV:	ECR/ECN INFORMATION:	TITLE:	SHEET No.
BA9	EC No.: **UCP2007-1744** DATE: **1/24/2007**	**KK 100 HEADER ASSEMBLY FRICTION LOCK SOLID BODY**	**- 10 -**

DOCUMENT NUMBER:	CREATED / REVISED BY:	CHECKED BY:	APPROVED BY:
SD - 6373 - 001	**ADERR**	**LSCHMIDT**	**FSMITH**

GROUP:	A-6373-NAH102-*
PIN NUMBER:	2766-1(102)
PIN LENGTH: L	.560 / (14.22)
MATING: M	.260 / (6.60)
PC TAIL: P	.175 / (4.45)
PACKAGING:	PK-6373-001

CKTS	MATERIAL NUMBER	ENG NUMBER	CKTS	MATERIAL NUMBER	ENG NUMBER	VOID CKT
2	22-23-3020	A-6373-02AH102				
3	22-23-3030	A-6373-03AH102				
4	22-23-3040	A-6373-04AH102				
5	22-23-3050	A-6373-05AH102				
6	22-23-3060	A-6373-06AH102				
7	22-23-3070	A-6373-07AH102				
8	22-23-3080	A-6373-08AH102				
9	22-23-3090	A-6373-09AH102				
10	22-23-3100	A-6373-10AH102				
11	22-23-3110	A-6373-11AH102				
12	22-23-3120	A-6373-12AH102				
13	22-23-3130	A-6373-13AH102				
14	22-23-3140	A-6373-14AH102				
15	22-23-3150	A-6373-15AH102				
16	22-23-3160	A-6373-16AH102				
17	22-23-3170	A-6373-17AH102				
18	22-23-3180	A-6373-18AH102				
19	22-23-3190	A-6373-19AH102				
20	22-23-3200	A-6373-20AH102				
21	22-23-3210	A-6373-21AH102				
22	22-23-3220	A-6373-22AH102				
23	22-23-3230	A-6373-23AH102				
24	22-23-3240	A-6373-24AH102				
25	22-23-3250	A-6373-25AH102				
26	22-23-3260	A-6373-26AH102				
27	22-23-3270	A-6373-27AH102				
28	22-23-3280	A-6373-28AH102				

GROUP:	A-6373-NAJ122-*
PIN NUMBER:	2766-52(122)
PIN LENGTH: L	.575 / (14.61)
MATING: M	.295 / (7.49)
PC TAIL: P	.155 / (3.94)
PACKAGING:	PK-6373-001

CKTS	MATERIAL NUMBER	ENG NUMBER	CKTS	MATERIAL NUMBER	ENG NUMBER	VOID CKT
2	22-23-3023	A-6373-02AJ122	05	22-04-6052	A-6373-05AJ122-1	1
3	22-23-3033	A-6373-03AJ122	06	22-04-6062	A-6373-06AJ122-2	2
4	22-23-3043	A-6373-04AJ122				
5	22-23-3053	A-6373-05AJ122				
6	22-23-3063	A-6373-06AJ122				
7		A-6373-07AJ122				
8	22-23-3083	A-6373-08AJ122				
9	22-23-3093	A-6373-09AJ122				
10	22-23-3103	A-6373-10AJ122				
11		A-6373-11AJ122				
12		A-6373-12AJ122				
13		A-6373-13AJ122				
14		A-6373-14AJ122				
15	22-23-3153	A-6373-15AJ122				
16	22-23-3163	A-6373-16AJ122				
17		A-6373-17AJ122				
18		A-6373-18AJ122				
19		A-6373-19AJ122				
20	22-23-3203	A-6373-20AJ122				
21		A-6373-21AJ122				
22		A-6373-22AJ122				
23		A-6373-23AJ122				
24		A-6373-24AJ122				
25		A-6373-25AJ122				
26		A-6373-26AJ122				
27		A-6373-27AJ122				
28		A-6373-28AJ122				

REV:	ECR/ECN INFORMATION:	TITLE:	SHEET No.
BA9	EC No.: **UCP2007-1744** DATE: **1/24/2007**	**KK 100 HEADER ASSEMBLY FRICTION LOCK SOLID BODY**	**- 11 -**

DOCUMENT NUMBER:	CREATED / REVISED BY:	CHECKED BY:	APPROVED BY:
SD - 6373 - 001	**ADERR**	**LSCHMIDT**	**FSMITH**

GROUP:	A-6373-NA501A-*
PIN NUMBER:	2766-1(501)
PIN LENGTH: L	.560 / (14.22)
MATING: M	.295 / (7.49)
PC TAIL: P	.140 / (3.56)
PACKAGING:	PK-44743-001

CKTS	MATERIAL NUMBER	ENG NUMBER	CKTS	MATERIAL NUMBER	ENG NUMBER	VOID CKT
2						
3	22-23-1035	A-6373-03A501A				
4	22-23-1045	A-6373-04A501A				
5	22-23-1055	A-6373-05A501A				
6	22-23-1065	A-6373-06A501A				
7	22-23-1075	A-6373-07A501A				
8	22-23-1085	A-6373-08A501A				
9	22-23-1095	A-6373-09A501A				
10	22-23-1105	A-6373-10A501A				
11	22-23-1115	A-6373-11A501A				
12	22-23-1125	A-6373-12A501A				
13	22-23-1135	A-6373-13A501A				
14	22-23-1145	A-6373-14A501A				
15	22-23-1155	A-6373-15A501A				
16	22-23-1165	A-6373-16A501A				
17	22-23-1175	A-6373-17A501A				
18	22-23-1185	A-6373-18A501A				
19	22-23-1195	A-6373-19A501A				
20	22-23-1205	A-6373-20A501A				
21	22-23-1211	A-6373-21A501A				
22	22-23-1222	A-6373-22A501A				
23	22-23-1233	A-6373-23A501A				
24	22-23-1244	A-6373-24A501A				
25	22-23-1255	A-6373-25A501A				
26	22-23-1266	A-6373-26A501A				
27	22-23-1277	A-6373-27A501A				
28	22-23-1288	A-6373-28A501A				

GROUP:	A-6373-NAL102-*
PIN NUMBER:	4166-8(102)
PIN LENGTH: L	1.000 / (25.40)
MATING: M	.295 / (7.49)
PC TAIL: P	.580 / (14.73)
PACKAGING:	PK-6373-001

CKTS	MATERIAL NUMBER	ENG NUMBER	CKTS	MATERIAL NUMBER	ENG NUMBER	VOID CKT
2			06	22-04-6066	A-6373-06AL102-2	2
3	22-23-6032	A-6373-03AL102	06	22-04-6067	A-6373-06AL102-3	3
4	22-23-6042	A-6373-04AL102				
5	22-23-6052	A-6373-05AL102				
6	22-23-6062	A-6373-06AL102				
7	22-23-6072	A-6373-07AL102				
8	22-23-6082	A-6373-08AL102				
9	22-23-6092	A-6373-09AL102				
10	22-23-6102	A-6373-10AL102				
11	22-23-6112	A-6373-11AL102				
12	22-23-6122	A-6373-12AL102				
13	22-23-6132	A-6373-13AL102				
14	22-23-6142	A-6373-14AL102				
15	22-23-6152	A-6373-15AL102				
16	22-23-6162	A-6373-16AL102				
17	22-23-6172	A-6373-17AL102				
18	22-23-6182	A-6373-18AL102				
19	22-23-6192	A-6373-19AL102				
20	22-23-6202	A-6373-20AL102				
21	22-23-6212	A-6373-21AL102				
22	22-23-6222	A-6373-22AL102				
23	22-23-6232	A-6373-23AL102				
24	22-23-6242	A-6373-24AL102				
25	22-23-6252	A-6373-25AL102				
26	22-23-6262	A-6373-26AL102				
27	22-23-6272	A-6373-27AL102				
28	22-23-6282	A-6373-28AL102				

REV:	ECR/ECN INFORMATION:	TITLE:	SHEET No.
BA9	EC No.: **UCP2007-1744** DATE: **1/24/2007**	**KK 100 HEADER ASSEMBLY FRICTION LOCK SOLID BODY**	**- 12 -**

DOCUMENT NUMBER:	CREATED / REVISED BY:	CHECKED BY:	APPROVED BY:
SD - 6373 - 001	**ADERR**	**LSCHMIDT**	**FSMITH**

GROUP:	A-6373-NAM102-*
PIN NUMBER:	2766-69(102)
PIN LENGTH: L	.515 / (13.08)
MATING: M	.300 / (7.62)
PC TAIL: P	.090 / (2.29)
PACKAGING:	PK-6373-001

CKTS	MATERIAL NUMBER	ENG NUMBER	CKTS	MATERIAL NUMBER	ENG NUMBER	VOID CKT
2	22-23-6023	A-6373-02AM102				
3	22-23-6033	A-6373-03AM102				
4	22-23-6043	A-6373-04AM102				
5	22-23-6053	A-6373-05AM102				
6	22-23-6063	A-6373-06AM102				
7	22-23-6073	A-6373-07AM102				
8	22-23-6083	A-6373-08AM102				
9	22-23-6093	A-6373-09AM102				
10	22-23-6103	A-6373-10AM102				
11	22-23-6113	A-6373-11AM102				
12	22-23-6123	A-6373-12AM102				
13	22-23-6133	A-6373-13AM102				
14	22-23-6143	A-6373-14AM102				
15	22-23-6153	A-6373-15AM102				
16	22-23-6163	A-6373-16AM102				
17	22-23-6173	A-6373-17AM102				
18	22-23-6183	A-6373-18AM102				
19	22-23-6193	A-6373-19AM102				
20	22-23-6203	A-6373-20AM102				
21	22-23-6213	A-6373-21AM102				
22	22-23-6223	A-6373-22AM102				
23	22-23-6233	A-6373-23AM102				
24	22-23-6243	A-6373-24AM102				
25	22-23-6253	A-6373-25AM102				
26	22-23-6263	A-6373-26AM102				
27	22-23-6273	A-6373-27AM102				
28	22-23-6283	A-6373-28AM102				

GROUP:	A-6373-NAM501-*
PIN NUMBER:	2766-69(501)
PIN LENGTH: L	.515 / (13.08)
MATING: M	.300 / (7.62)
PC TAIL: P	.090 / (2.29)
PACKAGING:	PK-6373-001

CKTS	MATERIAL NUMBER	ENG NUMBER	CKTS	MATERIAL NUMBER	ENG NUMBER	VOID CKT
2	22-23-6025	A-6373-02AM501				
3	22-23-6035	A-6373-03AM501				
4	22-23-6045	A-6373-04AM501				
5	22-23-6055	A-6373-05AM501				
6	22-23-6065	A-6373-06AM501				
7	22-23-6075	A-6373-07AM501				
8	22-23-6085	A-6373-08AM501				
9	22-23-6095	A-6373-09AM501				
10	22-23-6105	A-6373-10AM501				
11	22-23-6115	A-6373-11AM501				
12	22-23-6125	A-6373-12AM501				
13	22-23-6135	A-6373-13AM501				
14	22-23-6145	A-6373-14AM501				
15	22-23-6155	A-6373-15AM501				
16	22-23-6165	A-6373-16AM501				
17	22-23-6175	A-6373-17AM501				
18	22-23-6185	A-6373-18AM501				
19	22-23-6195	A-6373-19AM501				
20	22-23-6205	A-6373-20AM501				
21	22-23-6215	A-6373-21AM501				
22	22-23-6225	A-6373-22AM501				
23	22-23-6235	A-6373-23AM501				
24	22-23-6245	A-6373-24AM501				
25	22-23-6255	A-6373-25AM501				
26	22-23-6265	A-6373-26AM501				
27	22-23-6275	A-6373-27AM501				
28	22-23-6285	A-6373-28AM501				

REV:	ECR/ECN INFORMATION:	TITLE:	SHEET No.
BA9	EC No.: **UCP2007-1744** DATE: **1/24/2007**	**KK 100 HEADER ASSEMBLY FRICTION LOCK SOLID BODY**	**- 13 -**

DOCUMENT NUMBER:	CREATED / REVISED BY:	CHECKED BY:	APPROVED BY:
SD - 6373 - 001	**ADERR**	**LSCHMIDT**	**FSMITH**

GROUP:	A-6373-NAN501-*
PIN NUMBER:	2766-28(501)
PIN LENGTH: L	.625 / (15.88)
MATING: M	.295 / (7.49)
PC TAIL: P	.205 / (5.21)
PACKAGING:	PK-6373-001

CKTS	MATERIAL NUMBER	ENG NUMBER	CKTS	MATERIAL NUMBER	ENG NUMBER	VOID CKT
2		A-6373-02AN501				
3		A-6373-03AN501				
4	22-23-6047	A-6373-04AN501				
5		A-6373-05AN501				
6		A-6373-06AN501				
7		A-6373-07AN501				
8		A-6373-08AN501				
9		A-6373-09AN501				
10		A-6373-10AN501				
11		A-6373-11AN501				
12		A-6373-12AN501				
13		A-6373-13AN501				
14		A-6373-14AN501				
15		A-6373-15AN501				
16		A-6373-16AN501				
17		A-6373-17AN501				
18		A-6373-18AN501				
19		A-6373-19AN501				
20		A-6373-20AN501				
21		A-6373-21AN501				
22		A-6373-22AN501				
23		A-6373-23AN501				
24		A-6373-24AN501				
25		A-6373-25AN501				
26		A-6373-26AN501				
27		A-6373-27AN501				
28		A-6373-28AN501				

GROUP:	A-6373-NAB501-*
PIN NUMBER:	2766-54(501)
PIN LENGTH: L	.703 / (17.86)
MATING: M	.289 / (7.34)
PC TAIL: P	.289 / (7.34)
PACKAGING:	PK-6373-001

CKTS	MATERIAL NUMBER	ENG NUMBER	CKTS	MATERIAL NUMBER	ENG NUMBER	VOID CKT
2	50-29-1746	A-6373-02AB501				
3		A-6373-03AB501				
4		A-6373-04AB501				
5		A-6373-05AB501				
6		A-6373-06AB501				
7		A-6373-07AB501				
8	50-29-1741	A-6373-08AB501				
9		A-6373-09AB501				
10	50-29-1742	A-6373-10AB501				
11		A-6373-11AB501				
12		A-6373-12AB501				
13		A-6373-13AB501				
14		A-6373-14AB501				
15		A-6373-15AB501				
16		A-6373-16AB501				
17		A-6373-17AB501				
18		A-6373-18AB501				
19		A-6373-19AB501				
20		A-6373-20AB501				
21		A-6373-21AB501				
22		A-6373-22AB501				
23		A-6373-23AB501				
24		A-6373-24AB501				
25		A-6373-25AB501				
26		A-6373-26AB501				
27		A-6373-27AB501				
28		A-6373-28AB501				

REV:	ECR/ECN INFORMATION:	TITLE:	SHEET No.
BA9	EC No.: **UCP2007-1744** DATE: **1/24/2007**	**KK 100 HEADER ASSEMBLY FRICTION LOCK SOLID BODY**	**- 14 -**

DOCUMENT NUMBER:	CREATED / REVISED BY:	CHECKED BY:	APPROVED BY:
SD - 6373 - 001	**ADERR**	**LSCHMIDT**	**FSMITH**

GROUP:	A-6373-NAN102-*
PIN NUMBER:	2766-28(102)
PIN LENGTH: L	.625 / (15.88)
MATING: M	.295 / (7.49)
PC TAIL: P	.205 / (5.21)
PACKAGING:	PK-6373-001

CKTS	MATERIAL NUMBER	ENG NUMBER	CKTS	MATERIAL NUMBER	ENG NUMBER	VOID CKT
2			9	50-34-8527	A-6373-09AN102-7	7
3						
4	50-36-1696	A-6373-04AN102				
5						
6						
7						
8						
9						
10						
11						
12						
13						
14						
15						
16						
17						
18						
19						
20						
21						
22						
23						
24						
25						
26						
27						
28						

REV:	ECR/ECN INFORMATION:	TITLE:	SHEET No.
BA9	EC No.: **UCP2007-1744** DATE: **1/24/2007**	**KK 100 HEADER ASSEMBLY FRICTION LOCK SOLID BODY**	**- 15 -**

DOCUMENT NUMBER:	CREATED / REVISED BY:	CHECKED BY:	APPROVED BY:
SD - 6373 - 001	**ADERR**	**LSCHMIDT**	**FSMITH**