Intel® Desktop Board D945GNT

Technical Product Specification

May 2005

Order Number: D14069-001US

The Intel® Desktop Board D945GNT may contain design defects or errors known as errata that may cause the product to deviate from published specifications. Current characterized errata are documented in the Intel Desktop Board D945GNT Specification Update.

Revision History

Revision	Revision History	Date
-001	First release of the Intel® Desktop Board D945GNT Technical Product Specification.	May 2005

This product specification applies to only the standard Intel Desktop Board D945GNT with BIOS identifier NT94510J.86A.

Changes to this specification will be published in the Intel Desktop Board D945GNT Specification Update before being incorporated into a revision of this document.

INFORMATION IN THIS DOCUMENT IS PROVIDED IN CONNECTION WITH INTEL® PRODUCTS. NO LICENSE, EXPRESS OR IMPLIED, BY ESTOPPEL OR OTHERWISE, TO ANY INTELLECTUAL PROPERTY RIGHTS IS GRANTED BY THIS DOCUMENT. EXCEPT AS PROVIDED IN INTEL'S TERMS AND CONDITIONS OF SALE FOR SUCH PRODUCTS, INTEL ASSUMES NO LIABILITY WHATSOEVER, AND INTEL DISCLAIMS ANY EXPRESS OR IMPLIED WARRANTY, RELATING TO SALE AND/OR USE OF INTEL PRODUCTS INCLUDING LIABILITY OR WARRANTIES RELATING TO FITNESS FOR A PARTICULAR PURPOSE, MERCHANTABILITY, OR INFRINGEMENT OF ANY PATENT, COPYRIGHT OR OTHER INTELLECTUAL PROPERTY RIGHT. INTEL PRODUCTS ARE NOT INTENDED FOR USE IN MEDICAL, LIFE SAVING, OR LIFE SUSTAINING APPLICATIONS.

All Intel desktop boards are evaluated as Information Technology Equipment (I.T.E.) for use in personal computers (PC) for installation in homes, offices, schools, computer rooms, and similar locations. The suitability of this product for other PC or embedded non-PC applications or other environments, such as medical, industrial, alarm systems, test equipment, etc. may not be supported without further evaluation by Intel.

Intel Corporation may have patents or pending patent applications, trademarks, copyrights, or other intellectual property rights that relate to the presented subject matter. The furnishing of documents and other materials and information does not provide any license, express or implied, by estoppel or otherwise, to any such patents, trademarks, copyrights, or other intellectual property rights.

Intel may make changes to specifications and product descriptions at any time, without notice.

Designers must not rely on the absence or characteristics of any features or instructions marked "reserved" or "undefined." Intel reserves these for future definition and shall have no responsibility whatsoever for conflicts or incompatibilities arising from future changes to them.

Intel® desktop boards may contain design defects or errors known as errata, which may cause the product to deviate from published specifications. Current characterized errata are available on request.

Contact your local Intel sales office or your distributor to obtain the latest specifications before placing your product order.

Copies of documents which have an ordering number and are referenced in this document, or other Intel literature, may be obtained from:

Intel Corporation
P.O. Box 5937
Denver, CO 80217-9808

or call in North America 1-800-548-4725, Europe 44-0-1793-431-155, France 44-0-1793-421-777, Germany 44-0-1793-421-333, other Countries 708-296-9333.

Intel, Pentium, and Celeron are registered trademarks of Intel Corporation or its subsidiaries in the United States and other countries.

* Other names and brands may be claimed as the property of others.

Copyright © 2005, Intel Corporation. All rights reserved.

Preface

This Technical Product Specification (TPS) specifies the board layout, components, connectors, power and environmental requirements, and the BIOS for the Intel® Desktop Board D945GNT. It describes the standard product and available manufacturing options.

Intended Audience

The TPS is intended to provide detailed, technical information about the Desktop Board D945GNT and its components to the vendors, system integrators, and other engineers and technicians who need this level of information. It is specifically *not* intended for general audiences.

What This Document Contains

Chapter	Description
1	A description of the hardware used on the Desktop Board D945GNT
2	A map of the resources of the Desktop Board
3	The features supported by the BIOS Setup program
4	A description of the BIOS error messages, beep codes, and POST codes

Typographical Conventions

This section contains information about the conventions used in this specification. Not all of these symbols and abbreviations appear in all specifications of this type.

Notes, Cautions, and Warnings

NOTE

Notes call attention to important information.

INTEGRATOR'S NOTES

Integrator's notes are used to call attention to information that may be useful to system integrators.

CAUTION

Cautions are included to help you avoid damaging hardware or losing data.

WARNING

Warnings indicate conditions, which if not observed, can cause personal injury.

Other Common Notation

#	Used after a signal name to identify an active-low signal (such as USBP0#)
(NxnX)	When used in the description of a component, N indicates component type, xn are the relative coordinates of its location on the Desktop Board D945GNT, and X is the instance of the particular part at that general location. For example, J5J1 is a connector, located at 5J. It is the first connector in the 5J area.
GB	Gigabyte (1,073,741,824 bytes)
GB/sec	Gigabytes per second
Gbits/sec	Gigabits per second
KB	Kilobyte (1024 bytes)
Kbit	Kilobit (1024 bits)
kbits/sec	1000 bits per second
MB	Megabyte (1,048,576 bytes)
MB/sec	Megabytes per second
Mbit	Megabit (1,048,576 bits)
Mbit/sec	Megabits per second
xxh	An address or data value ending with a lowercase h indicates a hexadecimal value.
x.x V	Volts. Voltages are DC unless otherwise specified.
*	This symbol is used to indicate third-party brands and names that are the property of their respective owners.

Contents

1 Product Description

1.1 Overview 10
1.1.1 Feature Summary 10
1.1.2 Manufacturing Options 11
1.1.3 Board Layout 12
1.1.4 Block Diagram 14
1.2 Online Support 15
1.3 Processor 15
1.4 System Memory 16
1.4.1 Memory Configurations 17
1.5 Intel® 945G Chipset 21
1.5.1 Intel 945G Graphics Subsystem 21
1.5.2 USB 23
1.5.3 IDE Support 24
1.5.4 Real-Time Clock, CMOS SRAM, and Battery 26
1.6 PCI Express Connectors 26
1.7 IEEE-1394a Connectors (Optional) 26
1.8 Legacy I/O Controller 27
1.8.1 Serial Port 27
1.8.2 Parallel Port 27
1.8.3 Diskette Drive Controller 27
1.8.4 Keyboard and Mouse Interface 27
1.9 Audio Subsystem 28
1.9.1 Audio Subsystem Software 28
1.9.2 Audio Connectors 28
1.9.3 8-Channel (7.1) Audio Subsystem 29
1.9.4 6-Channel (5.1) Audio Subsystem 31
1.10 LAN Subsystem 32
1.10.1 LAN Subsystem Software 32
1.10.2 10/100 Mbits/sec LAN Subsystem 32
1.10.3 Gigabit LAN Subsystem 33
1.10.4 Intel® Active Management Technology (Optional) 34
1.10.5 Alert Standard Format (ASF) Support (Optional) 36
1.11 Hardware Management Subsystem 36
1.11.1 Hardware Monitoring and Fan Control ASIC 37
1.11.2 Chassis Intrusion and Detection 37
1.11.3 Fan Monitoring 37
1.11.4 Thermal Monitoring 38
1.12 Power Management 39
1.12.1 ACPI 39
1.12.2 Hardware Support 41
1.13 Trusted Platform Module (Optional) 45

2 Technical Reference

2.1 Introduction 47
2.2 Memory Resources 47
2.2.1 Addressable Memory 47
2.2.2 Memory Map 49
2.3 DMA Channels 49
2.4 Fixed I/O Map 50
2.5 PCI Configuration Space Map 51
2.6 Interrupts 52
2.7 PCI Conventional Interrupt Routing Map 53
2.8 Connectors 55
2.8.1 Back Panel Connectors 55
2.8.2 Component-side Connectors 58
2.9 Jumper Block 67
2.10 Mechanical Considerations 68
2.10.1 Form Factor 68
2.10.2 I/O Shield 69
2.11 Electrical Considerations 71
2.11.1 DC Loading 71
2.11.2 Add-in Board Considerations 71
2.11.3 Fan Connector Current Capability 72
2.11.4 Power Supply Considerations 72
2.12 Thermal Considerations 73
2.13 Reliability 75
2.14 Environmental 76
2.15 Regulatory Compliance 77
2.15.1 Safety Regulations 77
2.15.2 EMC Regulations 77
2.15.3 European Union Declaration of Conformity Statement 78
2.15.4 Recycling Considerations 79
2.15.5 Product Certification Markings (Board Level) 80

3 Overview of BIOS Features

3.1 Introduction 81
3.2 BIOS Flash Memory Organization 82
3.3 Resource Configuration 82
3.3.1 PCI Autoconfiguration 82
3.3.2 PCI IDE Support 82
3.4 System Management BIOS (SMBIOS) 83
3.5 Legacy USB Support 83
3.6 BIOS Updates 84
3.6.1 Language Support 84
3.6.2 Custom Splash Screen 84
3.7 Boot Options 85
3.7.1 CD-ROM Boot 85
3.7.2 Network Boot 85
3.7.3 Booting Without Attached Devices 85
3.7.4 Changing the Default Boot Device During POST 85

3.8 Adjusting Boot Speed 86
3.8.1 Peripheral Selection and Configuration 86
3.8.2 BIOS Boot Optimizations 86
3.9 BIOS Security Features 87

4 Error Messages and Beep Codes

4.1 Speaker 89
4.2 BIOS Beep Codes 89
4.3 BIOS Error Messages 89
4.4 Port 80h POST Codes 90

Figures

1. Board Components 12
2. Block Diagram 14
3. Memory Channel and DIMM Configuration 17
4. Dual Channel (Interleaved) Mode Configuration with Two DIMMs 18
5. Dual Channel (Interleaved) Mode Configuration with Three DIMMs 18
6. Dual Channel (Interleaved) Mode Configuration with Four DIMMs 19
7. Single Channel (Asymmetric) Mode Configuration with One DIMM 20
8. Single Channel (Asymmetric) Mode Configuration with Three DIMMs 20
9. Front/Back Panel Audio Connector Options for 8-Channel (7.1) Audio Subsystem 29
10. 8-channel (7.1) Audio Subsystem Block Diagram 30
11. Front/Back Panel Audio Connector Options for 6-Channel (5.1) Audio Subsystem 31
12. 6-Channel (5.1) Audio Subsystem Block Diagram 31
13. LAN Connector LED Locations 33
14. LAN Connector LED Locations 34
15. Thermal Sensors and Fan Connectors 38
16. Location of the Standby Power Indicator LED 44
17. Detailed System Memory Address Map 48
18. Back Panel Connectors for 8-Channel (7.1) Audio Subsystem 56
19. Back Panel Connectors for 6-Channel (5.1) Audio Subsystem 57
20. Component-side Connectors 58
21. Connection Diagram for Front Panel Connector 64
22. Connection Diagram for Front Panel USB Connectors 66
23. Connection Diagram for IEEE 1394a Connectors 66
24. Location of the Jumper Block 67
25. Board Dimensions 68
26. I/O Shield Dimensions for Boards with the 8-Channel (7.1) Audio Subsystem 69
27. I/O Shield Dimensions for Boards with the 6-Channel (5.1) Audio Subsystem 70
28. Processor Heatsink for Omni-directional Airflow 73
29. Localized High Temperature Zones 74

Tables

1. Feature Summary 10
2. Manufacturing Options 11
3. Board Components Shown in Figure 1 13
4. Supported Memory Configurations 16
5. LAN Connector LED States 33

6. LAN Connector LED States 34
7. Effects of Pressing the Power Switch 39
8. Power States and Targeted System Power 40
9. Wake-up Devices and Events 41
10. System Memory Map 49
11. DMA Channels 49
12. I/O Map 50
13. PCI Configuration Space Map 51
14. Interrupts 52
15. PCI Interrupt Routing Map 54
16. Back Panel Connectors Shown in Figure 18 56
17. Back Panel Connectors Shown in Figure 19 57
18. Component-side Connectors Shown in Figure 20 59
19. Front Panel Audio Connector 60
20. Chassis Intrusion Connector 60
21. SCSI Hard Drive Activity LED Connector (Optional) 60
22. Serial ATA Connectors 60
23. Processor Fan Connector 61
24. Front and Rear Chassis Fan Connectors 61
25. Auxiliary Fan Connector (optional) 61
26. Main Power Connector 62
27. ATX12V Power Connector 62
28. Auxiliary Front Panel Power/Sleep LED Connector 63
29. Front Panel Connector 64
30. States for a One-Color Power LED 65
31. States for a Two-Color Power LED 65
32. BIOS Setup Configuration Jumper Settings 67
33. DC Loading Characteristics 71
34. Fan Connector Current Capability 72
35. Thermal Considerations for Components 75
36. Environmental Specifications 76
37. Safety Regulations 77
38. EMC Regulations 77
39. Product Certification Markings 80
40. BIOS Setup Program Menu Bar 82
41. BIOS Setup Program Function Keys 82
42. Boot Device Menu Options 85
43. Supervisor and User Password Functions 87
44. Beep Codes 89
45. BIOS Error Messages 89
46. Port 80h POST Code Ranges 90
47. Port 80h POST Codes 91
48. Typical Port 80h POST Sequence 94

1 Product Description

What This Chapter Contains

1.1 Overview 10
1.2 Online Support 15
1.3 Processor 15
1.4 System Memory 16
1.5 Intel® 945G Chipset 21
1.6 PCI Express Connectors 26
1.7 IEEE-1394a Connectors (Optional) 26
1.8 Legacy I/O Controller 27
1.9 Audio Subsystem 28
1.10 LAN Subsystem 32
1.11 Hardware Management Subsystem 36
1.12 Power Management 39
1.13 Trusted Platform Module (Optional) 45

1.1 Overview

1.1.1 Feature Summary

Table 1 summarizes the major features of the board.

Table 1. Feature Summary

Form Factor	ATX (12.00 inches by 9.60 inches [304.80 millimeters by 243.84 millimeters])
Processor	Support for an Intel® Pentium® 4 processor in an LGA775 socket with a 1066, 800, or 533 MHz system bus
Memory	• Four 240-pin DDR2 SDRAM Dual Inline Memory Module (DIMM) sockets • Support for DDR2 667, DDR2 533, or DDR2 400 MHz DIMMs • Support for up to 4 GB of system memory
Chipset	Intel® 945G Chipset, consisting of: • Intel® 82945G Graphics Memory Controller Hub (GMCH) • Intel® 82801G I/O Controller Hub (ICH7)
Video	Intel® GMA950 onboard graphics subsystem
Audio	Refer to Table 2 on page 11 for a description of audio subsystem options
Legacy I/O Control	Legacy I/O controller for diskette drive, serial, parallel, and PS/2* ports
USB	Support for USB 2.0 devices
Peripheral Interfaces	• Eight USB ports • One serial port • One parallel port • Four Serial ATA interfaces • One Parallel ATA IDE interface with UDMA 33, ATA-66/100 support • One diskette drive interface • PS/2 keyboard and mouse ports
LAN Support	Refer to Table 2 on page 11 for a description of LAN subsystem options.
BIOS	• Intel® BIOS (resident in the SPI Flash device) • Support for Advanced Configuration and Power Interface (ACPI), Plug and Play, and SMBIOS
Expansion Capabilities	• Four PCI Conventional* bus connectors • Two PCI Express* x1 bus add-in card connectors • One PCI Express x16 bus add-in card connector
Instantly Available PC Technology	• Support for PCI Local Bus Specification Revision 2.3 • Support for PCI Express Revision 1.0a • Suspend to RAM support • Wake on PCI, RS-232, front panel, PS/2 devices, and USB ports
Hardware Monitor Subsystem	• Hardware monitoring and fan control ASIC • Voltage sense to detect out of range power supply voltages • Thermal sense to detect out of range thermal values • Three fan connectors • Three fan sense inputs used to monitor fan activity • Fan speed control

1.1.2 Manufacturing Options

Table 2 describes the manufacturing options. Not every manufacturing option is available in all marketing channels. Please contact your Intel representative to determine which manufacturing options are available to you.

Table 2. Manufacturing Options

Audio Subsystem	Intel® High Definition Audio subsystem in one of the following configurations: • 8-channel (7.1) audio subsystem with five analog audio outputs and two S/PDIF digital audio outputs (coaxial and optical) using the Sigmatel* 9223 audio codec • 6-channel (5.1) audio subsystem with three analog audio outputs using the Sigmatel 9220 audio codec
Auxiliary fan connector	Additional fan connector for use in larger chassis
IEEE-1394a Interface	IEEE-1394a controller and three IEEE-1394a connectors (one back panel connector, two front-panel connectors)
LAN subsystem	The board provides one of the following: • Gigabit (10/100/1000 Mbits/sec) LAN subsystem using the Intel® 82573E/82573V/82574V Gigabit Ethernet Controller • 10/100 Mbits/sec LAN subsystem using the Intel® 82562GX/82562GZ Platform LAN Connect (PLC) device
SATA RAID	Intel® 82801GR I/O Controller Hub (ICH7-R) for RAID support (levels 0,1, 0+1, and 5) on the SATA interface
SCSI Hard Drive Activity LED Connector	Allows add-in hard drive controllers (SCSI or other) to use the same LED as the onboard IDE controller
Trusted Platform Module (TPM), revision 1.2	A component that enhances platform security

For information about	Refer to
Available configurations for the board	Section 1.2, page 15

1.1.3 Board Layout

Figure 1 shows the location of the major components.

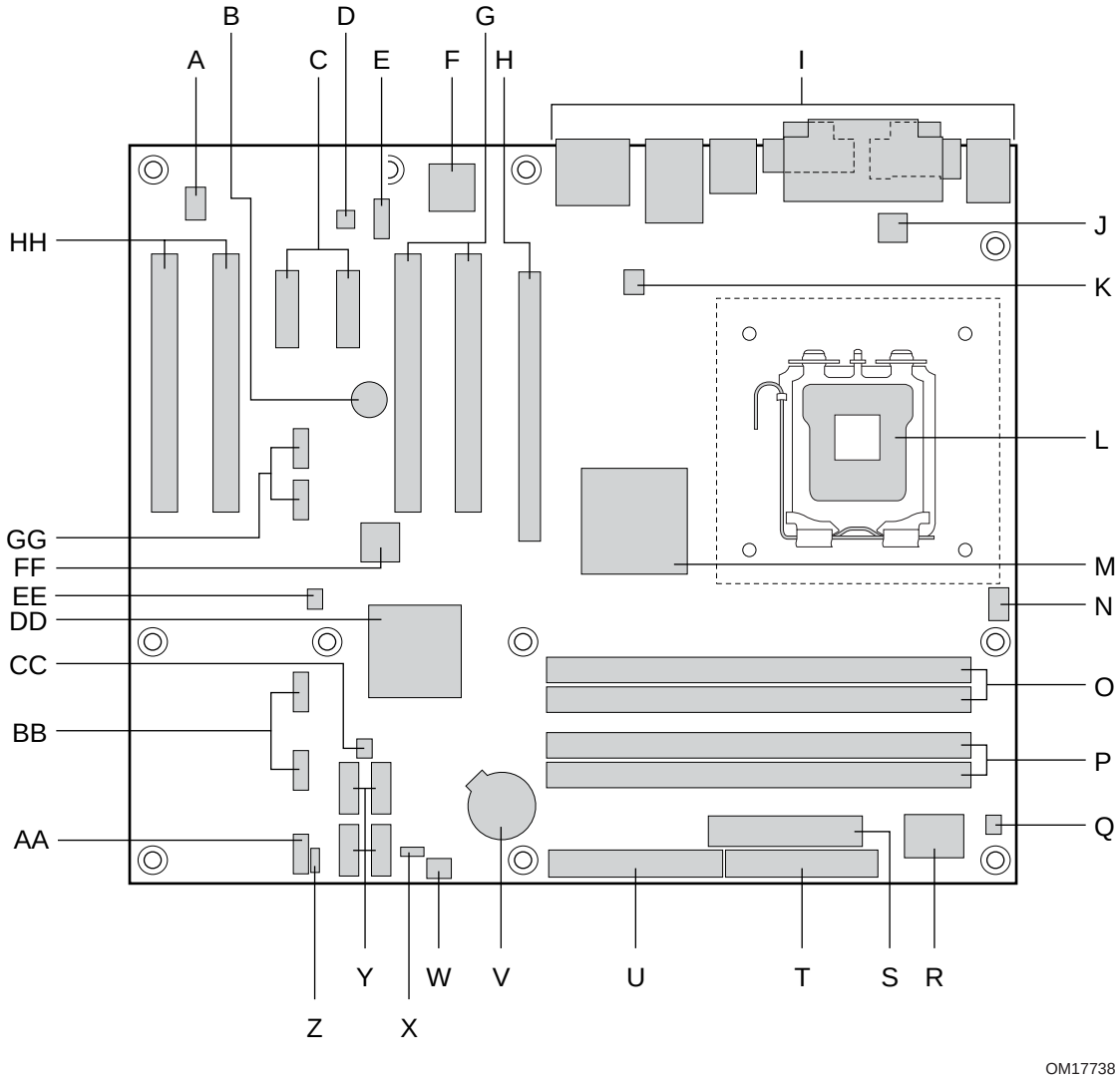

Figure 1. Board Components

Table 3 lists the components identified in Figure 1.

Table 3. Board Components Shown in Figure 1

Item/callout from Figure 1	Description
A	Auxiliary fan connector (optional)
B	Speaker
C	PCI Express x1 bus add-in card connectors [2]
D	Audio codec
E	Front panel audio connector
F	Ethernet device
G	PCI Conventional bus add-in card connectors [2]
H	PCI Express x16 bus add-in card connector
I	Back panel connectors
J	+12V power connector (ATX12V)
K	Rear chassis fan connector
L	LGA775 processor socket
M	Intel 82945G GMCH
N	Processor fan connector
O	DIMM Channel A sockets [2]
P	DIMM Channel B sockets [2]
Q	SCSI LED connector (optional)
R	Legacy I/O controller
S	Power connector
T	Diskette drive connector
U	Parallel ATE IDE connector
V	Battery
W	Front chassis fan connector
X	BIOS Setup configuration jumper block
Y	Serial ATA connectors [4]
Z	Auxiliary front panel power LED connector
AA	Front panel connector
BB	Front panel USB connectors [2]
CC	Chassis intrusion connector
DD	Intel 82801G I/O Controller Hub (ICH7)
EE	SPI flash device
FF	IEEE-1394a controller (optional)
GG	Front panel IEEE-1394a connectors (optional) [2]
HH	PCI Conventional bus add-in card connectors [2]

1.1.4 Block Diagram

Figure 2 is a block diagram of the major functional areas.

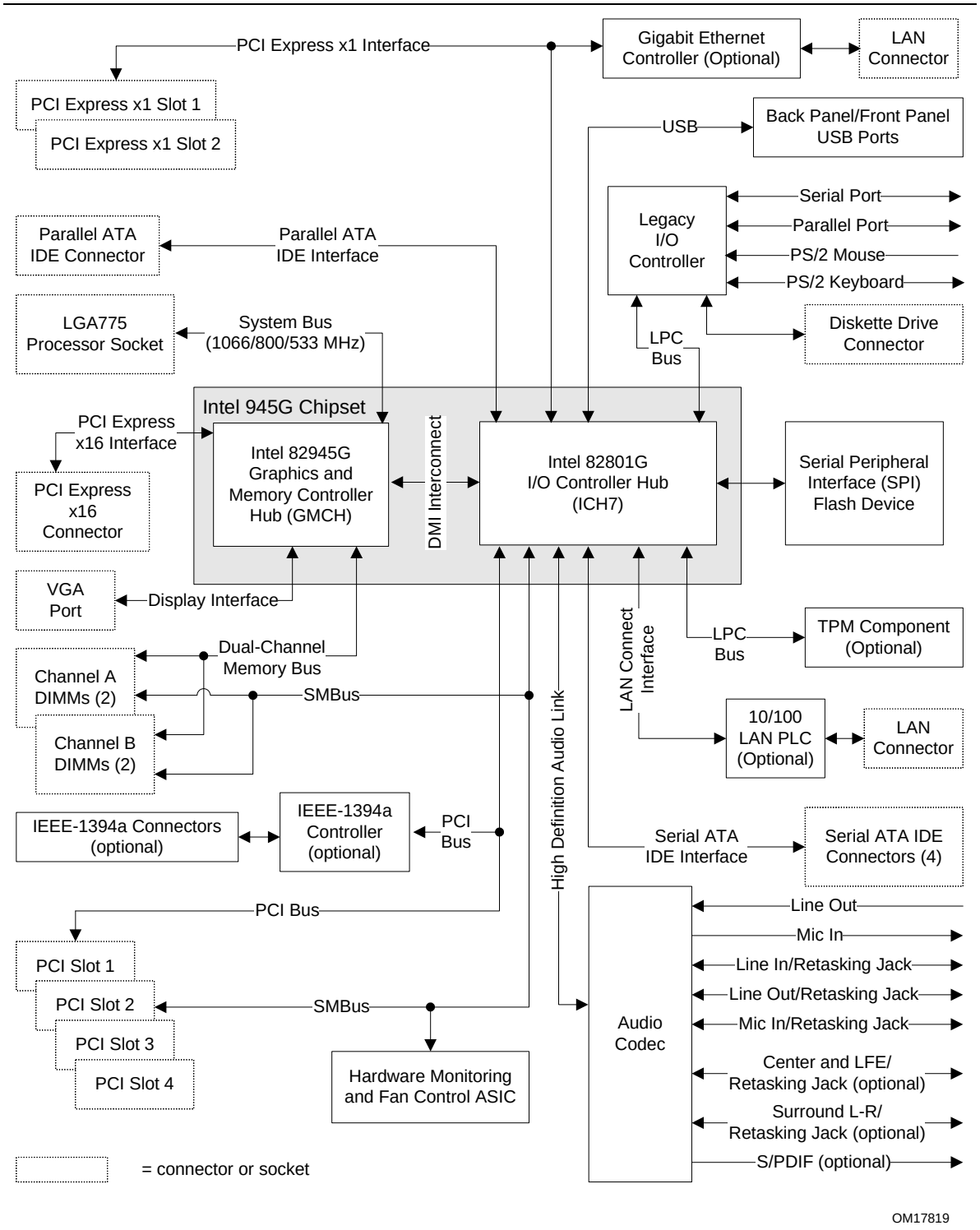

Figure 2. Block Diagram

1.2 Online Support

To find information about…	Visit this World Wide Web site:
Intel Desktop Board D945GNT under "Desktop Board Products" or "Desktop Board Support"	http://www.intel.com/design/motherbd http://support.intel.com/support/motherboards/desktop
Available configurations for the Desktop Board D945GNT	http://developer.intel.com/design/motherbd/nt/nt_available.htm
Processor data sheets	http://www.intel.com/design/litcentr
ICH7 addressing	http://developer.intel.com/products/chipsets
Custom splash screens	http://intel.com/design/motherbd/gen_indx.htm
Audio software and utilities	http://www.intel.com/design/motherbd
LAN software and drivers	http://www.intel.com/design/motherbd
Supported video modes	http://www.intel.com/design/motherbd/nt/nt_documentation.htm
Intel® Active Management Technology	http://www.intel.com/technology/manage/iamt/index.htm

1.3 Processor

The board is designed to support Intel Pentium 4 processors in an LGA775 processor socket with a 1066, 800, or 533 MHz system bus. See the Intel web site listed below for the most up-to-date list of supported processors.

For information about…	Refer to:
Supported processors	http://www.intel.com/design/motherbd/nt/nt_proc.htm

CAUTION

Use only the processors listed on web site above. Use of unsupported processors can damage the board, the processor, and the power supply.

INTEGRATOR'S NOTE

Use only ATX12V-compliant power supplies.

For information about	Refer to
Power supply connectors	Section 2.8.2.2, page 62

1.4 System Memory

The board has four DIMM sockets and support the following memory features:

- 1.8 V (only) DDR2 SDRAM DIMMs with gold-plated contacts
- Unbuffered, single-sided or double-sided DIMMs with the following restriction:

  Double-sided DIMMS with x16 organization are not supported.
- 4 GB maximum total system memory. Refer to Section 2.2.1 on page 47 for information on the total amount of addressable memory.
- Minimum total system memory: 128 MB
- Non-ECC DIMMs
- Serial Presence Detect
- DDR2 667, DDR2 533, or DDR2 400 MHz SDRAM DIMMs

NOTES

- *Remove the PCI Express x16 video card before installing or upgrading memory to avoid interference with the memory retention mechanism.*
- *To be fully compliant with all applicable DDR SDRAM memory specifications, the board should be populated with DIMMs that support the Serial Presence Detect (SPD) data structure. This allows the BIOS to read the SPD data and program the chipset to accurately configure memory settings for optimum performance. If non-SPD memory is installed, the BIOS will attempt to correctly configure the memory settings, but performance and reliability may be impacted or the DIMMs may not function under the determined frequency.*

Table 4 lists the supported DIMM configurations.

Table 4. Supported Memory Configurations

DIMM Capacity	Configuration	SDRAM Density	SDRAM Organization Front-side/Back-side	Number of SDRAM Devices
128 MB	SS	256 Mbit	16 M x 16/empty	4
256 MB	SS	256 Mbit	32 M x 8/empty	8
256 MB	SS	512 Mbit	32 M x 16/empty	4
512 MB	DS	256 Mbit	32 M x 8/32 M x 8	16
512 MB	SS	512 Mbit	64 M x 8/empty	8
512 MB	SS	1 Gbit	64 M x 16/empty	4
1024 MB	DS	512 Mbit	64 M x 8/64 M x 8	16
1024 MB	SS	1 Gbit	128 M x 8/empty	8
2048 MB	DS	1 Gbit	128 M x 8/128 M x 8	16

Note: In the second column, “DS” refers to double-sided memory modules (containing two rows of SDRAM) and “SS” refers to single-sided memory modules (containing one row of SDRAM).

INTEGRATOR’S NOTE

It is possible to install four 2048 MB (2 GB) modules for a total of 8 GB of system memory, however, only 4 GB of address space is available. Refer to Section 2.2.1, on page 47 for additional information on available memory.

1.4.1 Memory Configurations

The Intel 82945G GMCH supports two types of memory organization:

- **Dual channel (Interleaved) mode**. This mode offers the highest throughput for real world applications. Dual channel mode is enabled when the installed memory capacities of both DIMM channels are equal. Technology and device width can vary from one channel to the other but the installed memory capacity for each channel must be equal. If different speed DIMMs are used between channels, the slowest memory timing will be used.
- **Single channel (Asymmetric) mode**. This mode is equivalent to single channel bandwidth operation for real world applications. This mode is used when only a single DIMM is installed or the memory capacities are unequal. Technology and device width can vary from one channel to the other. If different speed DIMMs are used between channels, the slowest memory timing will be used.

Figure 3 illustrates the memory channel and DIMM configuration.

NOTE

The DIMM0 sockets of both channels are blue. The DIMM1 sockets of both channels are black.

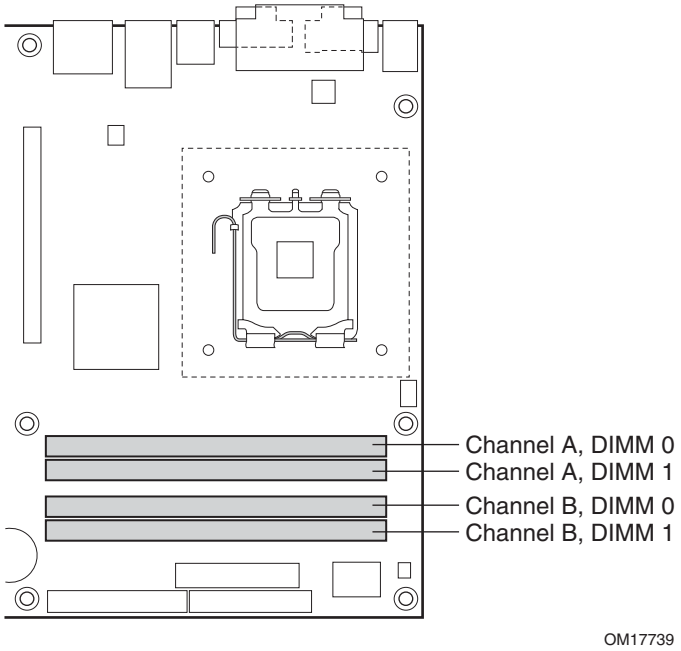

Figure 3. Memory Channel and DIMM Configuration

1.4.1.1 Dual Channel (Interleaved) Mode Configurations

Figure 4 shows a dual channel configuration using two DIMMs. In this example, the DIMM0 (blue) sockets of both channels are populated with identical DIMMs.

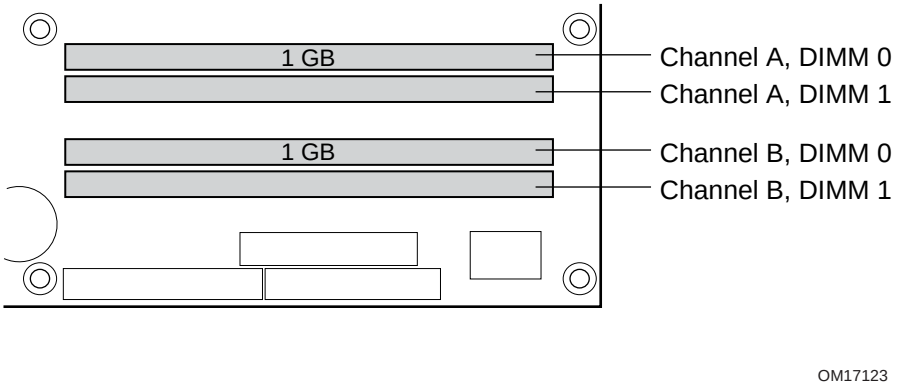

Figure 4. Dual Channel (Interleaved) Mode Configuration with Two DIMMs

Figure 5 shows a dual channel configuration using three DIMMs. In this example, the combined capacity of the two DIMMs in Channel A equal the capacity of the single DIMM in the DIMM0 (blue) socket of Channel B.

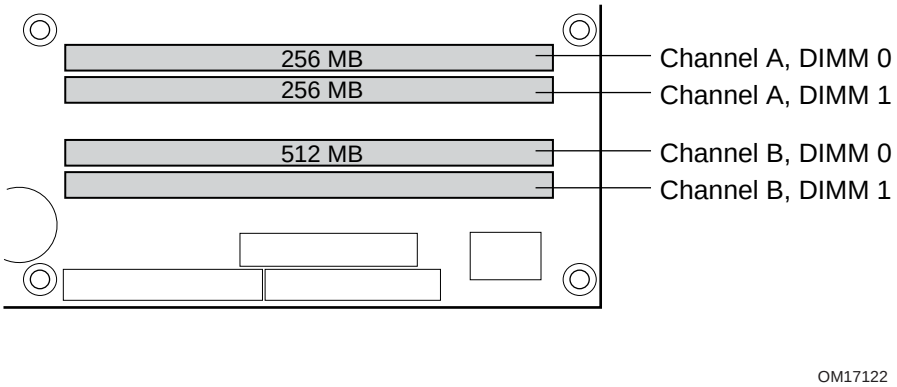

Figure 5. Dual Channel (Interleaved) Mode Configuration with Three DIMMs

Figure 6 shows a dual channel configuration using four DIMMs. In this example, the combined capacity of the two DIMMs in Channel A equal the combined capacity of the two DIMMs in Channel B. Also, the DIMMs are matched between DIMM0 and DIMM1 of both channels.

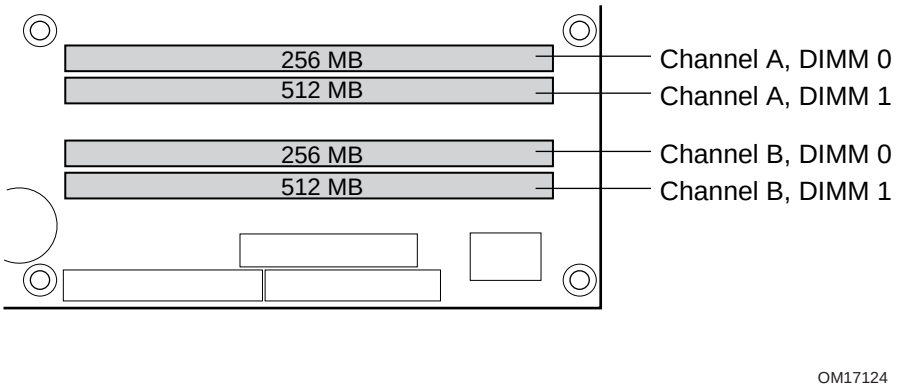

Figure 6. Dual Channel (Interleaved) Mode Configuration with Four DIMMs

1.4.1.2 Single Channel (Asymmetric) Mode Configurations

NOTE

Dual channel (Interleaved) mode configurations provide the highest memory throughput.

Figure 7 shows a single channel configuration using one DIMM. In this example, only the DIMM0 (blue) socket of Channel A is populated. Channel B is not populated.

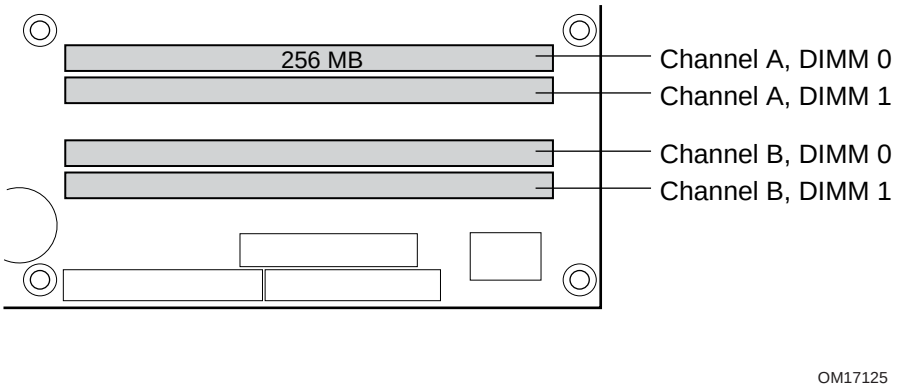

Figure 7. Single Channel (Asymmetric) Mode Configuration with One DIMM

Figure 8 shows a single channel configuration using three DIMMs. In this example, the combined capacity of the two DIMMs in Channel A does not equal the capacity of the single DIMM in the DIMM0 (blue) socket of Channel B.

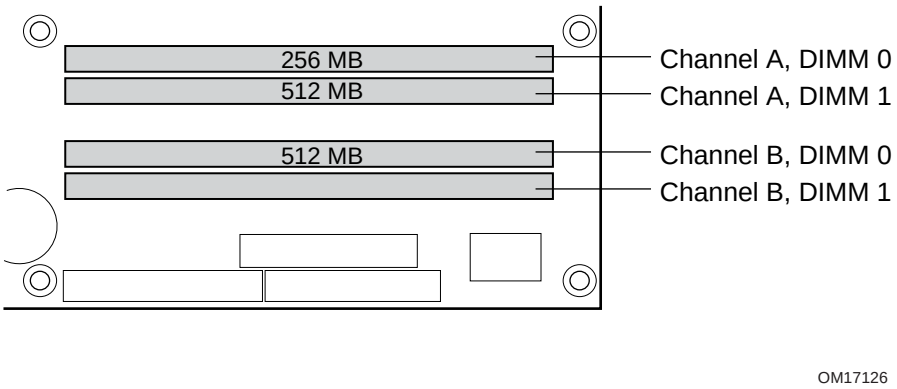

Figure 8. Single Channel (Asymmetric) Mode Configuration with Three DIMMs

1.5 Intel® 945G Chipset

The Intel 945G chipset consists of the following devices:

- Intel 82945G Graphics Memory Controller Hub (GMCH) with Direct Media Interface (DMI) interconnect
- Intel 82801G I/O Controller Hub (ICH7) with DMI interconnect

The GMCH component provides interfaces to the CPU, memory, PCI Express, and the DMI interconnect. The component also provides integrated graphics capabilities supporting 3D, 2D and display capabilities. The ICH7 is a centralized controller for the board's I/O paths.

For information about	Refer to
The Intel 945G chipset	http://developer.intel.com/
Resources used by the chipset	Chapter 2

1.5.1 Intel 945G Graphics Subsystem

The Intel 945G chipset contains two separate, mutually exclusive graphics options. Either the GMA950 graphics controller (contained within the 82945G GMCH) is used, or a PCI Express x16 add-in card can be used. When a PCI Express x16 add-in card is installed, the GMA950 graphics controller is disabled.

1.5.1.1 Intel® GMA950 Graphics Controller

The Intel GMA950 graphics controller features the following:

- 400 MHz core frequency
- High performance 3-D setup and render engine
- High quality texture engine
  - DX9* Compliant Hardware Pixel Shader 2.0
  - Alpha and luminance maps
  - Texture color-keying/chroma-keying
  - Cubic environment reflection mapping
  - Enhanced texture blending functions
- 3D Graphics Rendering enhancements
  - 1.3 Dual Texture GigaPixel/Sec Fill Rate
  - 16 and 32 bit color
  - Maximum 3D supported resolution of 1600 x 1200 x 32 at 85 Hz
  - Vertex cache
  - Anti-aliased lines
  - OpenGL* version 1.4 support with vertex buffer and EXT_Shadow extensions
- 2D Graphics enhancements
  - 8, 16,and 32 bit color
  - Optimized 256-bit BLT engine
  - Color space conversion
  - Anti-aliased lines

- Video
  - Hardware motion compensation for MPEG2
  - Software DVD at 30 fps full screen
- Display
  - Integrated 24-bit 400 MHz RAMDAC
  - Up to 2048 x 1536 at 75 Hz refresh (QXGA)
  - DDC2B compliant interface
  - With Advanced Digital Display (ADD2/ADD2+) cards, support for TV-out / TV-in and DVI digital display connections
  - Supports flat panels up to 2048 x 1536 at 60Hz or digital CRT/HDTV at 1920 x 1080 at 85 Hz (with ADD2/ADD2+)
  - Two multiplexed DVO port interfaces with 200 MHz pixel clocks using an ADD2/ADD2+ card
- Dynamic Video Memory Technology (DVMT) support up to 224 MB
- Intel® Zoom Utility

For information about	Refer to
DVMT	Section 1.5.1.2, page 22
Obtaining graphics software and utilities	Section 1.2, page 15

1.5.1.2 Dynamic Video Memory Technology (DVMT)

DVMT enables enhanced graphics and memory performance through Direct AGP, and highly efficient memory utilization. DVMT ensures the most efficient use of available system memory for maximum 2-D/3-D graphics performance. Up to 224 MB of system memory can be allocated to DVMT on systems that have 512 MB or more of total system memory installed. Up to 128 MB can be allocated to DVMT on systems that have 256 MB but less than 512 MB of total installed system memory. Up to 64 MB can be allocated to DVMT when less than 256 MB of system memory is installed. DVMT returns system memory back to the operating system when the additional system memory is no longer required by the graphics subsystem.

DVMT will always use a minimal fixed portion of system physical memory (as set in the BIOS Setup program) for compatibility with legacy applications. An example of this would be when using VGA graphics under DOS. Once loaded, the operating system and graphics drivers allocate additional system memory to the graphics buffer as needed for performing graphics functions.

NOTE

The use of DVMT requires operating system driver support.

1.5.1.3 Advanced Digital Display (ADD2/ADD2+) Card Support

The GMCH routes two multiplexed DVO ports that are each capable of driving up to a 200 MHz pixel clock to the PCI Express x16 connector. The DVO ports can be paired for a dual channel configuration to support up to a 400 MHz pixel clock. When an ADD2/ADD2+ card is detected, the Intel GMA950 graphics controller is enabled and the PCI Express x16 connector is configured for DVO mode. DVO mode enables the DVO ports to be accessed by the ADD2/ADD2+ card. An ADD2/ADD2+ card can either be configured to support simultaneous display with the primary VGA display or can be configured to support dual independent display as an extended desktop configuration with different color depths and resolutions. ADD2/ADD2+ cards can be designed to support the following configurations:

- TV-Out (composite video)
- Transition Minimized Differential Signaling (TMDS) for DVI 1.0
- Low Voltage Differential Signaling (LVDS)
- Single device operating in dual channel mode
- VGA output
- HDTV output

1.5.1.4 Configuration Modes

A list of supported modes for the Intel GMA950 graphics controller is available as a downloadable document.

For information about	Refer to
Supported video modes for the board	Section 1.2, page 15

1.5.2 USB

The board supports up to eight USB 2.0 ports, supports UHCI and EHCI, and uses UHCI- and EHCI-compatible drivers.

The ICH7 provides the USB controller for all ports. The port arrangement is as follows:

- Four ports are implemented with dual stacked back panel connectors adjacent to the audio connectors
- Four ports are routed to two separate front panel USB connectors

NOTE

Computer systems that have an unshielded cable attached to a USB port may not meet FCC Class B requirements, even if no device is attached to the cable. Use shielded cable that meets the requirements for full-speed devices.

For information about	Refer to
The location of the USB connectors on the back panel	Figure 19, page 57
The location of the front panel USB connectors	Figure 20, page 58

1.5.3 IDE Support

The board provides five IDE interface connectors:

- One parallel ATA IDE connector that supports two devices
- Four serial ATA IDE connectors that support one device per connector

1.5.3.1 Parallel ATE IDE Interface

The ICH7's Parallel ATA IDE controller has one bus-mastering Parallel ATA IDE interface. The Parallel ATA IDE interface supports the following modes:

- Programmed I/O (PIO): processor controls data transfer.
- 8237-style DMA: DMA offloads the processor, supporting transfer rates of up to 16 MB/sec.
- Ultra DMA: DMA protocol on IDE bus supporting host and target throttling and transfer rates of up to 33 MB/sec.
- ATA-66: DMA protocol on IDE bus supporting host and target throttling and transfer rates of up to 66 MB/sec. ATA-66 protocol is similar to Ultra DMA and is device driver compatible.
- ATA-100: DMA protocol on IDE bus allows host and target throttling. The ICH7's ATA-100 logic can achieve read transfer rates up to 100 MB/sec and write transfer rates up to 88 MB/sec.

NOTE

ATA-66 and ATA-100 are faster timings and require a specialized cable to reduce reflections, noise, and inductive coupling.

The Parallel ATA IDE interface also supports ATAPI devices (such as CD-ROM drives) and ATA devices using the transfer modes.

The BIOS supports Logical Block Addressing (LBA) and Extended Cylinder Head Sector (ECHS) translation modes. The drive reports the transfer rate and translation mode to the BIOS.

For information about	Refer to
The location of the Parallel ATA IDE connector	Figure 20, page 58

1.5.3.2 Serial ATA Interfaces

The ICH7's Serial ATA controller offers four independent Serial ATA ports with a theoretical maximum transfer rate of 3 Gbits/sec per port. One device can be installed on each port for a maximum of four Serial ATA devices. A point-to-point interface is used for host to device connections, unlike Parallel ATA IDE which supports a master/slave configuration and two devices per channel.

For compatibility, the underlying Serial ATA functionality is transparent to the operating system. The Serial ATA controller can operate in both legacy and native modes. In legacy mode, standard IDE I/O and IRQ resources are assigned (IRQ 14 and 15). In Native mode, standard PCI Conventional bus resource steering is used. Native mode is the preferred mode for configurations using the Windows* XP and Windows 2000 operating systems.

NOTE

Many Serial ATA drives use new low-voltage power connectors and require adaptors or power supplies equipped with low-voltage power connectors.

For more information, see: http://www.serialata.org/

For information about	Refer to
The location of the Serial ATA IDE connectors	Figure 20, page 58

1.5.3.3 Serial ATA RAID (Optional)

The optional ICH7-R supports the following RAID (Redundant Array of Independent Drives) levels:

- **RAID 0** - data striping. Multiple physical drives can be teamed together to create one logical drive. As data is written or retrieved from the logical drive, both drives operate in parallel, thus increasing the throughput. The ICH7-R allows for more than two drives to be used in a RAID 0 configuration.
- **RAID 1** - data mirroring. Multiple physical drives maintain duplicate sets of all data on separate disk drives. Level 1 provides the highest data reliability because two complete copies of all information are maintained. The ICH7-R allows for two or four drives to be used in a RAID 1 configuration.
- **RAID 0+1 (or RAID 10)** - data striping and mirroring. RAID 0+1 combines multiple mirrored drives (RAID 1) with data striping (RAID 0) into a single array. This provides the highest performance with data protection. Data is striped across all mirrored sets. RAID 0+1 utilizes several drives to stripe data (increased performance) and then makes a copy of the striped drives to provide redundancy. The mirrored disks eliminate the overhead and delay of parity.
- **RAID 5** - distributed parity. RAID Level 5 stripes data at a block level across several drives and distributes parity among the drives; no single disk is devoted to parity. Because parity data is distributed on each drive, read performance tends to be lower than other RAID types. RAID 5 requires the use of three or four drives.

1.5.3.4 SCSI Hard Drive Activity LED Connector (Optional)

The SCSI hard drive activity LED connector is a 1 x 2-pin connector that allows an add-in hard drive controller to use the same LED as the onboard IDE controller. For proper operation, this connector should be wired to the LED output of the add-in hard drive controller. The LED indicates when data is being read from, or written to, either the add-in hard drive controller or the onboard IDE controller (Parallel ATA or Serial ATA).

For information about	Refer to
The location of the SCSI hard drive activity LED connector	Figure 20, page 58
The signal names of the SCSI hard drive activity LED connector	Table 21, page 60

1.5.4 Real-Time Clock, CMOS SRAM, and Battery

A coin-cell battery (CR2032) powers the real-time clock and CMOS memory. When the computer is not plugged into a wall socket, the battery has an estimated life of three years. When the computer is plugged in, the standby current from the power supply extends the life of the battery. The clock is accurate to ± 13 minutes/year at 25 ºC with 3.3 VSB applied.

NOTE

If the battery and AC power fail, custom defaults, if previously saved, will be loaded into CMOS RAM at power-on.

1.6 PCI Express Connectors

The board provides the following PCI Express connectors:

- One PCI Express x16 connector supporting simultaneous transfer speeds up to 8 GBytes/sec
- Two PCI Express x1 connectors. The x1 interfaces support simultaneous transfer speeds up to 500 MBytes/sec

The PCI Express interface supports the PCI Conventional bus configuration mechanism so that the underlying PCI Express architecture is compatible with PCI Conventional compliant operating systems. Additional features of the PCI Express interface include the following:

- Support for the PCI Express enhanced configuration mechanism
- Automatic discovery, link training, and initialization
- Support for Active State Power Management (ASPM)
- SMBus 2.0 support
- Wake# signal supporting wake events from ACPI S1, S3, S4, or S5
- Software compatible with the PCI Power Management Event (PME) mechanism defined in the PCI Power Management Specification Rev. 1.1

1.7 IEEE-1394a Connectors (Optional)

The optional IEEE-1394a interface addresses interconnection of both computer peripherals and consumer electronics. The IEEE-1394a interface provides a throughput ranging from 100 Mbits/sec to 400 Mbits/sec. As a manufacturing option, the board includes three IEEE-1394a connectors as follows:

- One IEEE-1394a connector located on the back panel.
- Two IEEE-1394a front-panel connectors located on the component side.

For information about	Refer to
The location of the back panel IEEE-1394a connector	Figure 18, page 56
The location of the front panel IEEE-1394a connectors	Figure 20, page 58
The signal names of the front panel IEEE-1394a connectors	Section 2.8.2.7, page 66

1.8 Legacy I/O Controller

The legacy I/O controller provides the following features:

- One serial port
- One parallel port with Extended Capabilities Port (ECP) and Enhanced Parallel Port (EPP) support
- Serial IRQ interface compatible with serialized IRQ support for PCI Conventional bus systems
- PS/2-style mouse and keyboard interfaces
- Interface for one 1.44 MB or 2.88 MB diskette drive
- Intelligent power management, including a programmable wake-up event interface
- PCI Conventional bus power management support

The BIOS Setup program provides configuration options for the legacy I/O controller.

1.8.1 Serial Port

The Serial port A connector is located on the back panel. The serial port supports data transfers at speeds up to 115.2 kbits/sec with BIOS support.

For information about	Refer to
The location of the serial port A connector	Figure 19, page 57

1.8.2 Parallel Port

The 25-pin D-Sub parallel port connector is located on the back panel. Use the BIOS Setup program to set the parallel port mode.

For information about	Refer to
The location of the parallel port connector	Figure 19, page 57

1.8.3 Diskette Drive Controller

The legacy I/O controller supports one diskette drive. Use the BIOS Setup program to configure the diskette drive interface.

For information about	Refer to
The location of the diskette drive connector	Figure 20, page 58

1.8.4 Keyboard and Mouse Interface

PS/2 keyboard and mouse connectors are located on the back panel.

NOTE

The keyboard is supported in the bottom PS/2 connector and the mouse is supported in the top PS/2 connector. Power to the computer should be turned off before a keyboard or mouse is connected or disconnected.

For information about	Refer to
The location of the keyboard and mouse connectors	Figure 19, page 57

1.9 Audio Subsystem

The board supports the Intel High Definition audio subsystem based on the Sigmatel 9223 or the Sigmatel 9220 audio codec. The audio subsystem supports the following features:

- Advanced jack sense for the back panel audio jacks that enables the audio codec to recognize the device that is connected to an audio port. The back panel audio jacks are capable of retasking according to user's definition, or can be automatically switched depending on the recognized device type.
- Stereo input and output for all back panel jacks
- Line out and Mic in functions for front panel audio jacks
- A signal-to-noise (S/N) ratio of 95 dB

1.9.1 Audio Subsystem Software

Audio software and drivers are available from Intel's World Wide Web site.

For information about	Refer to
Obtaining audio software and drivers	Section 1.2, page 15

1.9.2 Audio Connectors

The board contains audio connectors on both the back panel and the component side of the board. The front panel audio connector provides mic in and line out signals for the front panel. The functions of the back panel audio connectors are dependent on which subsystem is present. The 8-channel (7.1) audio subsystem is described in Section 1.9.3; the 6-channel (5.1) audio subsystem is described in Section 1.9.4.

For information about	Refer to
The location of the front panel audio connector	Figure 20, page 58
The signal names of the front panel audio connector	Table 19, page 60
The back panel audio connectors	Section 2.8.1, page 55

1.9.3 8-Channel (7.1) Audio Subsystem

The 8-channel (7.1) audio subsystem includes the following:

- Intel 82801G I/O Controller Hub (ICH7)
- Sigmatel 9223 audio codec
- Microphone input that supports a single dynamic, condenser, or electret microphone

The back panel audio connectors are configurable through the audio device drivers. The available configurable audio ports are shown in Figure 9.

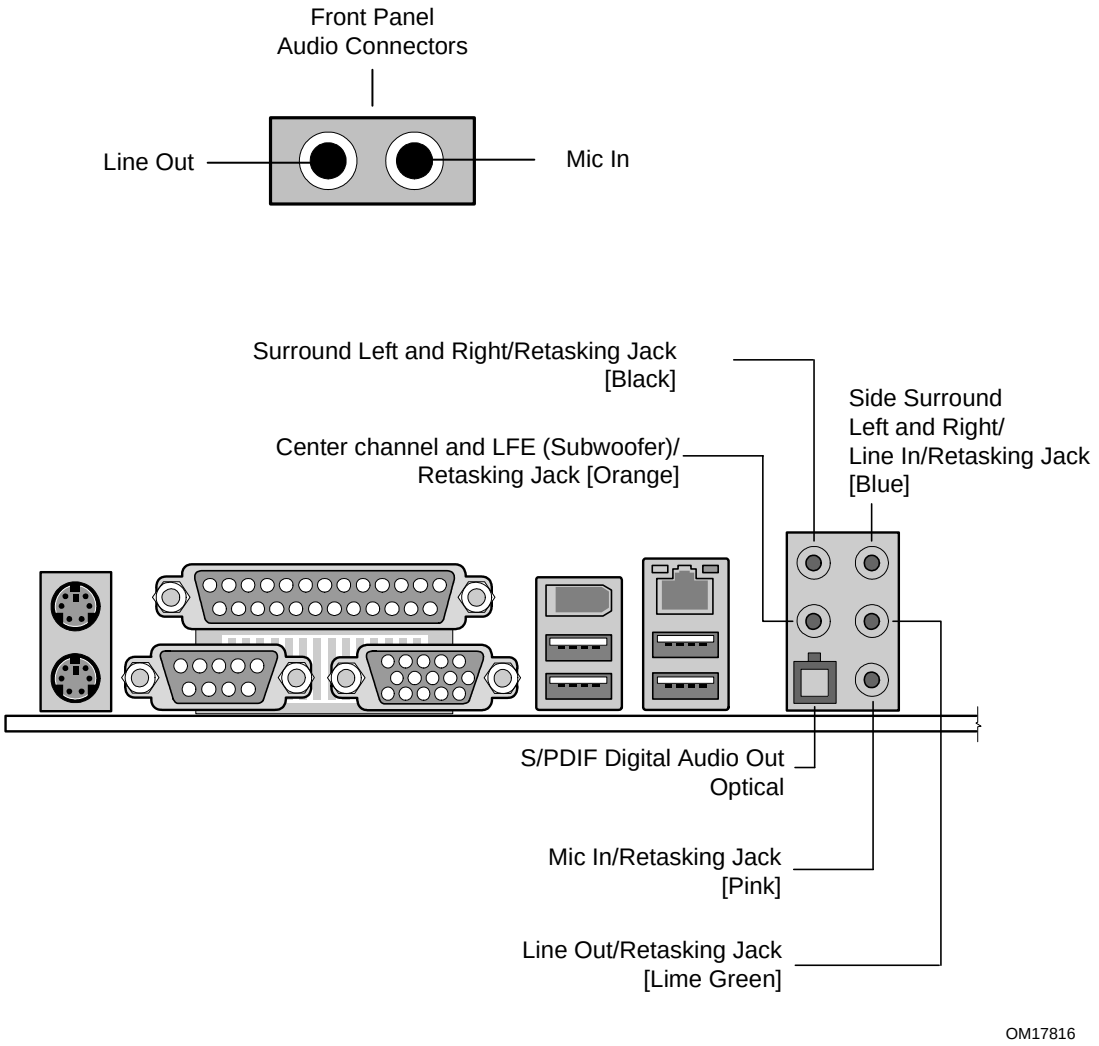

Figure 9. Front/Back Panel Audio Connector Options for 8-Channel (7.1) Audio Subsystem

Figure 10 is a block diagram of the 8-channel (7.1) audio subsystem.

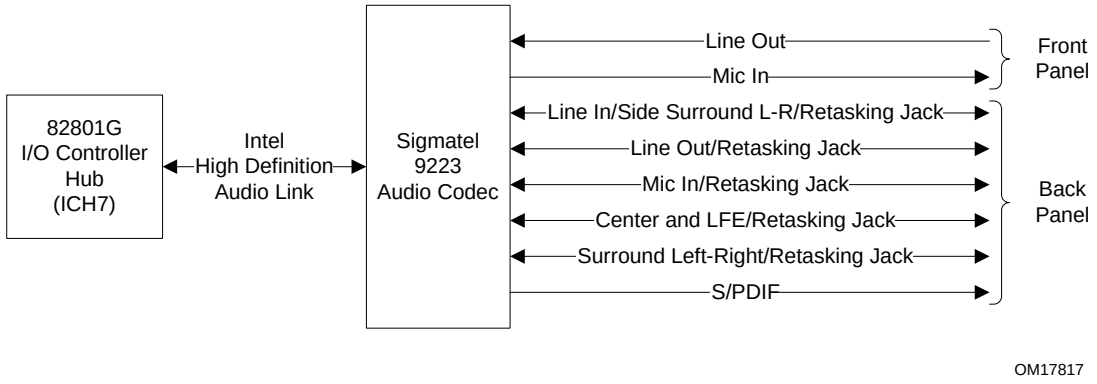

Figure 10. 8-channel (7.1) Audio Subsystem Block Diagram

For information about	Refer to
The back panel audio connectors	Section 2.8.1, page 55

1.9.4 6-Channel (5.1) Audio Subsystem

The 6-channel (5.1) audio subsystem includes the following:

- Intel 82801G I/O Controller Hub (ICH7)
- Sigmatel 9220 audio codec
- Microphone input that supports a single dynamic, condenser, or electret microphone

The back panel audio connectors are configurable through the audio device drivers. The available configurable audio ports are shown in Figure 11.

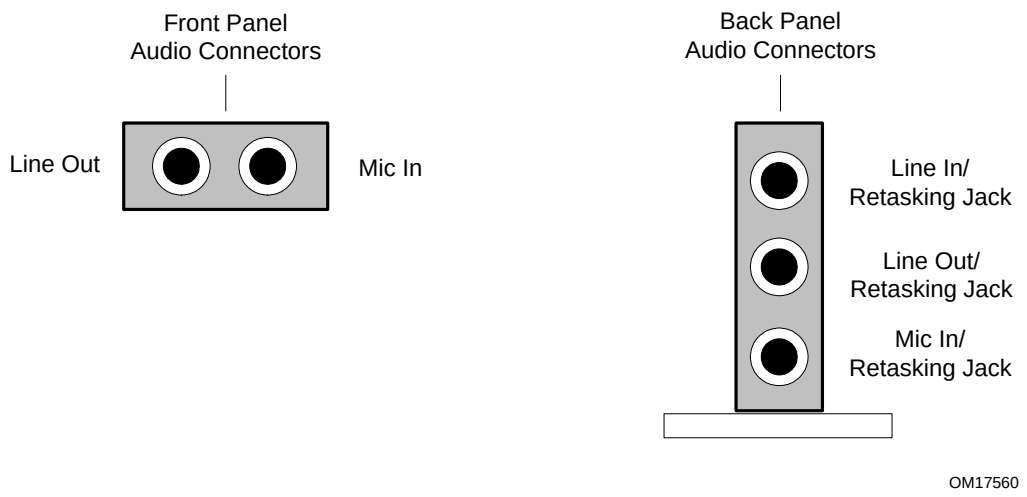

Figure 11. Front/Back Panel Audio Connector Options for 6-Channel (5.1) Audio Subsystem

Figure 12 is a block diagram of the 6-channel (5.1) audio subsystem.

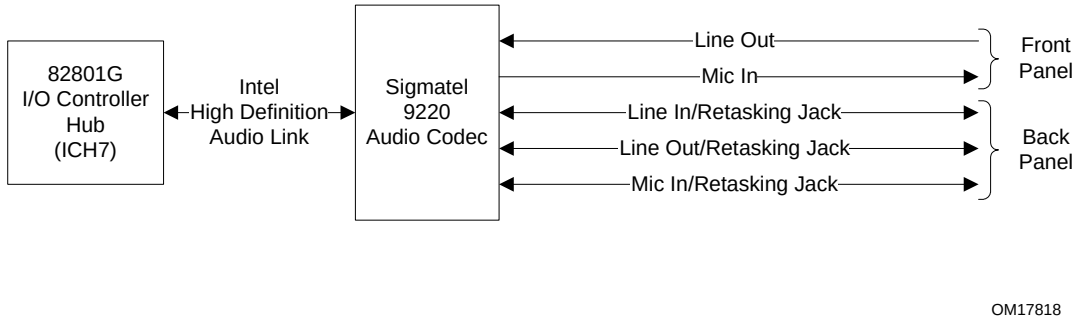

Figure 12. 6-Channel (5.1) Audio Subsystem Block Diagram

For information about	Refer to
The back panel audio connectors	Section 2.8.1, page 55

1.10 LAN Subsystem

The LAN subsystem consists of the following:

- Physical layer interface device. As a manufacturing option, the board includes one of the following LAN devices:
  - Intel® 82562GX/82562GZ PLC for 10/100 Mbits/sec Ethernet LAN connectivity
  - Intel® 82573E/82573V/82574V for Gigabit (10/100/1000 Mbits/sec) Ethernet LAN connectivity
- RJ-45 LAN connector with integrated status LEDs

Additional features of the LAN subsystem include:

- CSMA/CD protocol engine
- LAN connect interface that supports the 82562GX and 82562GZ
- PCI Conventional bus power management
  - Supports ACPI technology
  - Supports LAN wake capabilities

1.10.1 LAN Subsystem Software

LAN software and drivers are available from Intel's World Wide Web site.

For information about	Refer to
Obtaining LAN software and drivers	Section 1.2, page 15

1.10.2 10/100 Mbits/sec LAN Subsystem

The 10/100 Mbits/sec LAN subsystem consists of the following:

- Intel 82801G ICH7
- Intel 82562GX/82562GZ PLC
- RJ-45 LAN connector with integrated status LEDs.

1.10.2.1 Intel® 82562GX/82562GZ Physical Layer Interface Device

The Intel 82562GX provides the following functions:

- 10/100 Ethernet LAN connectivity
- Full device driver compatibility
- Programmable transit threshold
- Configuration EEPROM that contains the MAC address

The Intel® 82562GZ additionally provides Alert Standard Format (ASF) 1.03 support.

1.10.2.2 RJ-45 LAN Connector with Integrated LEDs

Two LEDs are built into the RJ-45 LAN connector (shown in Figure 13).

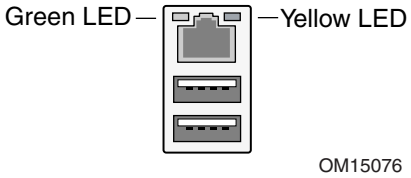

Figure 13. LAN Connector LED Locations

Table 5 describes the LED states when the board is powered up and the 10/100 Mbits/sec LAN subsystem is operating.

Table 5. LAN Connector LED States

LED Color	LED State	Condition
Green	Off	LAN link is not established.
	On	LAN link is established.
	Blinking	LAN activity is occurring.
Yellow	Off	10 Mbits/sec data rate is selected.
	On	100 Mbits/sec data rate is selected.

1.10.3 Gigabit LAN Subsystem

The Gigabit (10/100/1000 Mbits/sec) LAN subsystem includes the Intel 82573/82574 controller and an RJ-45 LAN connector with integrated status LEDs.

1.10.3.1 Intel® 82573E/82573V/82574V Gigabit Ethernet Controller

The Intel 82573E/82573V/82574V Gigabit Ethernet Controller supports the following features:

- PCI Express link
- 10/100/1000 IEEE 802.3 compliant
- Compliant to IEEE 802.3x flow control support
- Jumbo frame support
- TCP, IP, UDP checksum offload
- Transmit TCP segmentation
- Advanced packet filtering
- Full device driver compatibility
- PCI Express Power Management Support

The 82573E Gigabit Ethernet Controller also supports the following:

- Intel® Active Management Technology
- Alert Standard Format (ASF) 2.0.

1.10.3.2 RJ-45 LAN Connector with Integrated LEDs

Two LEDs are built into the RJ-45 LAN connector (as shown in Figure 14). Table 6 describes the LED states when the board is powered up and the Gigabit LAN subsystem is operating.

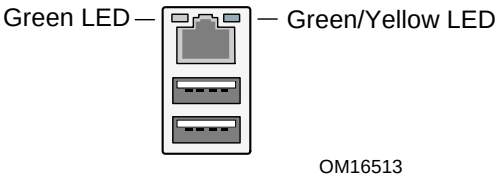

Figure 14. LAN Connector LED Locations

Table 6. LAN Connector LED States

LED	Color	LED State	Condition
Left	Green	Off	LAN link is not established.
		On	LAN link is established.
		Blinking	LAN activity is occurring.
Right	N/A	Off	10 Mbits/sec data rate is selected.
	Green	On	100 Mbits/sec data rate is selected.
	Yellow	On	1000 Mbits/sec data rate is selected.

1.10.4 Intel® Active Management Technology (Optional)

NOTE

Intel Active Management Technology (AMT) is available only on boards that use the Intel® 82573E Ethernet Controller.

Intel Active Management Technology (AMT) offers IT organizations tamper-resistant and persistent management capabilities. Specifically, Intel® AMT is a hardware-based solution that offers encrypted and persistent asset management and remote diagnostics and/or recovery capabilities for networked platforms. With Intel AMT, IT organizations can easily get accurate platform information, and can perform remote updating, diagnostics, debugging, and repair of a system, regardless of the state of the operating system and the power state of the system. Intel AMT enables IT organizations to discover, heal, and protect all of their computing assets, regardless of system state in the manner described below.

- Discovering hardware and software computing assets:
  - Intel AMT stores hardware and software asset information in non-volatile memory and allows IT to read the asset information anytime, even if the PC is off
  - Users cannot remove or prevent IT organization access to the information because it does not rely on software agents
- Healing systems remotely, regardless of the operating system or system state:
  - Intel AMT provides out-of-band diagnostics and recovery capabilities for IT organizations to remotely diagnose and repair PCs after software, operating system, or hardware failures

  - Alerting and event logging help IT organizations detect and diagnose problems quickly to reduce end-user downtime
- Protecting the enterprise against malicious software attacks:
  - Intel AMT helps IT organizations keep software versions and virus protection consistent and up-to-date across the enterprise
  - Version information is stored in non-volatile memory for access anytime by third party software to check and, if necessary, wake a system to perform off-hours updates

The key features of Intel AMT include:

- Secure Out of Band (OOB) system management that allows remote management of PCs regardless of system power or operating system state
  - SSL3.1/TLS encryption
  - HTTP authentication
  - TCP/IP
  - HTTP web GUI
  - XML/SOAP API
- Remote troubleshooting and recovery that can significantly reduce desk-side visits and potentially increasing efficiency of IT technical staff
  - System event log
  - IDE-Redirection or PXE boot; Network drive or remote CD boot
  - Serial over LAN
  - OOB diagnostics
  - Remote control
  - Remote BIOS update
- Proactive alerting that decreases downtime and minimizes time to repair
  - Programmable policies
  - Operating system lock-up alert
  - Boot failure alert
  - Hardware failure alerts
- Third party non-volatile storage that prevents users from removing critical inventory, remote control, or virus protection agents
  - Nonvolatile storage for agents
  - Tamper-resistant
- Remote hardware and software asset tracking that eliminates time-consuming manual inventory tracking, which also reduces asset accounting costs
  - E-Asset Tag
  - HW/SW inventory

For information about	Refer to
Intel Active Management Technology	Section 1.2, page 15

1.10.5 Alert Standard Format (ASF) Support (Optional)

NOTE

Alter Standard Format (ASF) support is available only on boards that use the Intel 82573E Ethernet Controller or the Intel 82562GZ PLC device.

The board provides the following ASF support for PCI Express x1 bus add-in LAN cards and PCI Conventional bus add-in LAN cards installed in PCI Conventional bus slot 2:

- Monitoring of system firmware progress events, including:
  - BIOS present
  - Primary processor initialization
  - Memory initialization
  - Video initialization
  - PCI resource configuration
  - Hard-disk initialization
  - User authentication
  - Starting operating system boot process
- Monitoring of system firmware error events, including:
  - Memory missing
  - Memory failure
  - No video device
  - Keyboard failure
  - Hard-disk failure
  - No boot media
- Boot options to boot from different types of boot devices
- Reset, shutdown, power cycle, and power up options
- LAN Subsystem Software

1.11 Hardware Management Subsystem

The hardware management features enable the board to be compatible with the Wired for Management (WfM) specification. The board has several hardware management features, including the following:

- Chassis intrusion detection
- Fan monitoring and control (through the hardware monitoring and fan control ASIC)
- Thermal and voltage monitoring

1.11.1 Hardware Monitoring and Fan Control ASIC

The features of the hardware monitoring and fan control ASIC include:

- Internal ambient temperature sensor
- Two remote thermal diode sensors for direct monitoring of processor temperature and ambient temperature sensing
- Power supply monitoring of five voltages (+5 V, +12 V, +3.3 VSB, +1.5 V, and +VCCP) to detect levels above or below acceptable values
- Thermally monitored closed-loop fan control, for all three fans, that can adjust the fan speed or switch the fans on or off as needed
- SMBus interface

For information about	Refer to
The location of the fan connectors and sensors for thermal monitoring	Figure 15, page 38

1.11.2 Chassis Intrusion and Detection

The board supports a chassis security feature that detects if the chassis cover is removed. The security feature uses a mechanical switch on the chassis that attaches to the chassis intrusion connector. When the chassis cover is removed, the mechanical switch is in the closed position.

1.11.3 Fan Monitoring

Fan monitoring can be implemented using Intel® Desktop Utilities or third-party software. The level of monitoring and control is dependent on the hardware monitoring ASIC used with the board.

For information about	Refer to
The functions of the fan connectors	Section 1.12.2.2, page 42

1.11.4 Thermal Monitoring

Figure 15 shows the location of the sensors and fan connectors.

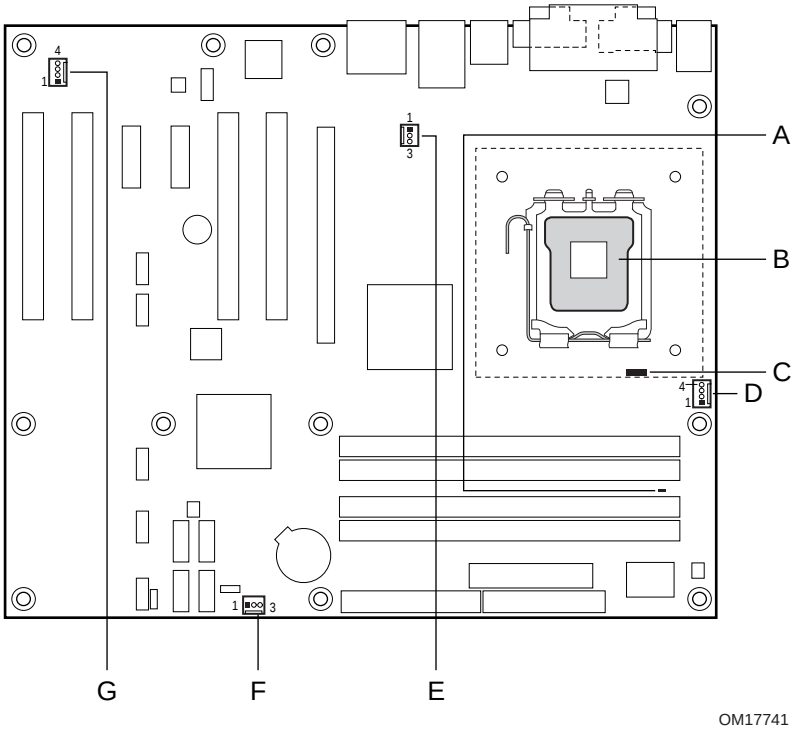

Item	Description
A	Remote ambient temperature sensor
B	Thermal diode, located on processor die
C	Ambient temperature sensor, internal to hardware monitoring and fan control ASIC
D	Processor fan
E	Rear chassis fan
F	Front chassis fan
G	Auxiliary fan (optional)

Figure 15. Thermal Sensors and Fan Connectors

1.12 Power Management

Power management is implemented at several levels, including:

- Software support through Advanced Configuration and Power Interface (ACPI)
- Hardware support:
  - Power connector
  - Fan connectors
  - LAN wake capabilities
  - Instantly Available PC technology
  - Resume on Ring
  - Wake from USB
  - Wake from PS/2 devices
  - Power Management Event signal (PME#) wake-up support

1.12.1 ACPI

ACPI gives the operating system direct control over the power management and Plug and Play functions of a computer. The use of ACPI with this board requires an operating system that provides full ACPI support. ACPI features include:

- Plug and Play (including bus and device enumeration)
- Power management control of individual devices, add-in boards (some add-in boards may require an ACPI-aware driver), video displays, and hard disk drives
- Methods for achieving less than 15-watt system operation in the power-on/standby sleeping state
- A Soft-off feature that enables the operating system to power-off the computer
- Support for multiple wake-up events (see Table 9 on page 41)
- Support for a front panel power and sleep mode switch

Table 7 lists the system states based on how long the power switch is pressed, depending on how ACPI is configured with an ACPI-aware operating system.

Table 7. Effects of Pressing the Power Switch

If the system is in this state…	…and the power switch is pressed for	…the system enters this state
Off (ACPI G2/G5 – Soft off)	Less than four seconds	Power-on (ACPI G0 – working state)
On (ACPI G0 – working state)	Less than four seconds	Soft-off/Standby (ACPI G1 – sleeping state)
On (ACPI G0 – working state)	More than four seconds	Fail safe power-off (ACPI G2/G5 – Soft off)
Sleep (ACPI G1 – sleeping state)	Less than four seconds	Wake-up (ACPI G0 – working state)
Sleep (ACPI G1 – sleeping state)	More than four seconds	Power-off (ACPI G2/G5 – Soft off)

1.12.1.1 System States and Power States

Under ACPI, the operating system directs all system and device power state transitions. The operating system puts devices in and out of low-power states based on user preferences and knowledge of how devices are being used by applications. Devices that are not being used can be turned off. The operating system uses information from applications and user settings to put the system as a whole into a low-power state.

Table 8 lists the power states supported by the board along with the associated system power targets. See the ACPI specification for a complete description of the various system and power states.

Table 8. Power States and Targeted System Power

Global States	Sleeping States	Processor States	Device States	Targeted System Power (Note 1)
G0 – working state	S0 – working	C0 – working	D0 – working state.	Full power > 30 W
G1 – sleeping state	S1 – Processor stopped	C1 – stop grant	D1, D2, D3 – device specification specific.	5 W < power < 52.5 W
G1 – sleeping state	S3 – Suspend to RAM. Context saved to RAM.	No power	D3 – no power except for wake-up logic.	Power < 5 W (Note 2)
G1 – sleeping state	S4 – Suspend to disk. Context saved to disk.	No power	D3 – no power except for wake-up logic.	Power < 5 W (Note 2)
G2/S5	S5 – Soft off. Context not saved. Cold boot is required.	No power	D3 – no power except for wake-up logic.	Power < 5 W (Note 2)
G3 – mechanical off AC power is disconnected from the computer.	No power to the system.	No power	D3 – no power for wake-up logic, except when provided by battery or external source.	No power to the system. Service can be performed safely.

Notes:

1. Total system power is dependent on the system configuration, including add-in boards and peripherals powered by the system chassis' power supply.
2. Dependent on the standby power consumption of wake-up devices used in the system.

1.12.1.2 One-Watt Standby

In 2001, the U.S. government issued an executive order requiring a reduction in power for appliances and personal computers. This board meets that requirement by operating at 1 W (or less) in S5 (Standby) mode. One-Watt operation applies only to the S5 state when the computer is turned off, but still connected to AC power. One-Watt operation does not apply to the S3 (Suspend to RAM) or S4 (Suspend to disk) states.

Newer energy-efficient power supplies using less than 0.5 W (in Standby mode) may also be needed to achieve this goal.

1.12.1.3 Wake-up Devices and Events

Table 9 lists the devices or specific events that can wake the computer from specific states.

Table 9. Wake-up Devices and Events

These devices/events can wake up the computer…	…from this state
LAN	S1, S3, S4, S5 (Note)
Modem (back panel Serial Port A)	S1, S3
PME# signal	S1, S3, S4, S5 (Note)
Power switch	S1, S3, S4, S5
PS/2 devices	S1, S3
RTC alarm	S1, S3, S4, S5
USB	S1, S3
WAKE# signal	S1, S3, S4, S5

Note: For LAN and PME# signal, S5 is disabled by default in the BIOS Setup program. Setting this option to Power On will enable a wake-up event from LAN in the S5 state.

NOTE

The use of these wake-up events from an ACPI state requires an operating system that provides full ACPI support. In addition, software, drivers, and peripherals must fully support ACPI wake events.

1.12.2 Hardware Support

CAUTION

Ensure that the power supply provides adequate +5 V standby current if LAN wake capabilities and Instantly Available PC technology features are used. Failure to do so can damage the power supply. The total amount of standby current required depends on the wake devices supported and manufacturing options.

The board provides several power management hardware features, including:

- Power connector
- Fan connectors
- LAN wake capabilities
- Instantly Available PC technology
- Resume on Ring
- Wake from USB
- Wake from PS/2 keyboard
- PME# signal wake-up support
- WAKE# signal wake-up support

LAN wake capabilities and Instantly Available PC technology require power from the +5 V standby line.

Resume on Ring enables telephony devices to access the computer when it is in a power-managed state. The method used depends on the type of telephony device (external or internal).

NOTE

The use of Resume on Ring and Wake from USB technologies from an ACPI state requires an operating system that provides full ACPI support.

1.12.2.1 Power Connector

ATX12V-compliant power supplies can turn off the system power through system control. When an ACPI-enabled system receives the correct command, the power supply removes all non-standby voltages.

When resuming from an AC power failure, the computer returns to the power state it was in before power was interrupted (on or off). The computer's response can be set using the Last Power State feature in the BIOS Setup program's Boot menu.

For information about	Refer to
The location of the main power connector	Figure 20, page 58
The signal names of the main power connector	Table 26, page 62

1.12.2.2 Fan Connectors

The function/operation of the fan connectors is as follows:

- The fans are on when the board is in the S0 or S1 state.
- The fans are off when the board is off or in the S3, S4, or S5 state.
- Each fan connector is wired to a fan tachometer input of the hardware monitoring and fan control ASIC.
- All fan connectors support closed-loop fan control that can adjust the fan speed or switch the fan on or off as needed.
- All fan connectors have a +12 V DC connection.

For information about	Refer to
The location of the fan connectors	Figure 20, page 58
The location of the fan connectors and sensors for thermal monitoring	Figure 15, page 38
The signal names of the processor fan connector	Table 23, page 61
The signal names of the chassis fan connectors	Table 24, page 61

1.12.2.3 LAN Wake Capabilities

CAUTION

For LAN wake capabilities, the +5 V standby line for the power supply must be capable of providing adequate +5 V standby current. Failure to provide adequate standby current when implementing LAN wake capabilities can damage the power supply.

LAN wake capabilities enable remote wake-up of the computer through a network. The LAN network adapter monitors network traffic at the Media Independent Interface. Upon detecting a Magic Packet* frame, the LAN subsystem asserts a wake-up signal that powers up the computer. Depending on the LAN implementation, the board supports LAN wake capabilities with ACPI in the following ways:

- The PCI Express WAKE# signal
- The PCI Conventional bus PME# signal for PCI 2.3 compliant LAN designs
- The onboard LAN subsystem

1.12.2.4 Instantly Available PC Technology

CAUTION

For Instantly Available PC technology, the +5 V standby line for the power supply must be capable of providing adequate +5 V standby current. Failure to provide adequate standby current when implementing Instantly Available PC technology can damage the power supply.

Instantly Available PC technology enables the board to enter the ACPI S3 (Suspend-to-RAM) sleep-state. While in the S3 sleep-state, the computer will appear to be off (the power supply is off, and the front panel LED is amber if dual colored, or off if single colored.) When signaled by a wake-up device or event, the system quickly returns to its last known wake state. Table 9 on page 41 lists the devices and events that can wake the computer from the S3 state.

The board supports the *PCI Bus Power Management Interface Specification*. Add-in boards that also support this specification can participate in power management and can be used to wake the computer.

The use of Instantly Available PC technology requires operating system support and PCI 2.3 compliant add-in cards, PCI Express add-in cards, and drivers.

1.12.2.5 Resume on Ring

The operation of Resume on Ring can be summarized as follows:

- Resumes operation from ACPI S1 or S3 states
- Detects incoming call similarly for external and internal modems
- Requires modem interrupt be unmasked for correct operation

1.12.2.6 Wake from USB

USB bus activity wakes the computer from ACPI S1 or S3 states.

NOTE

Wake from USB requires the use of a USB peripheral that supports Wake from USB.

1.12.2.7 Wake from PS/2 Devices

PS/2 device activity wakes the computer from an ACPI S1 or S3 state.

1.12.2.8 PME# Signal Wake-up Support

When the PME# signal on the PCI Conventional bus is asserted, the computer wakes from an ACPI S1, S3, S4, or S5 state (with Wake on PME enabled in BIOS).

1.12.2.9 WAKE# Signal Wake-up Support

When the WAKE# signal on the PCI Express bus is asserted, the computer wakes from an ACPI S1, S3, S4, or S5 state.

1.12.2.10 +5 V Standby Power Indicator LED

The +5 V standby power indicator LED shows that power is still present even when the computer appears to be off. Figure 16 shows the location of the standby power indicator LED.

CAUTION

If AC power has been switched off and the standby power indicator is still lit, disconnect the power cord before installing or removing any devices connected to the board. Failure to do so could damage the board and any attached devices.

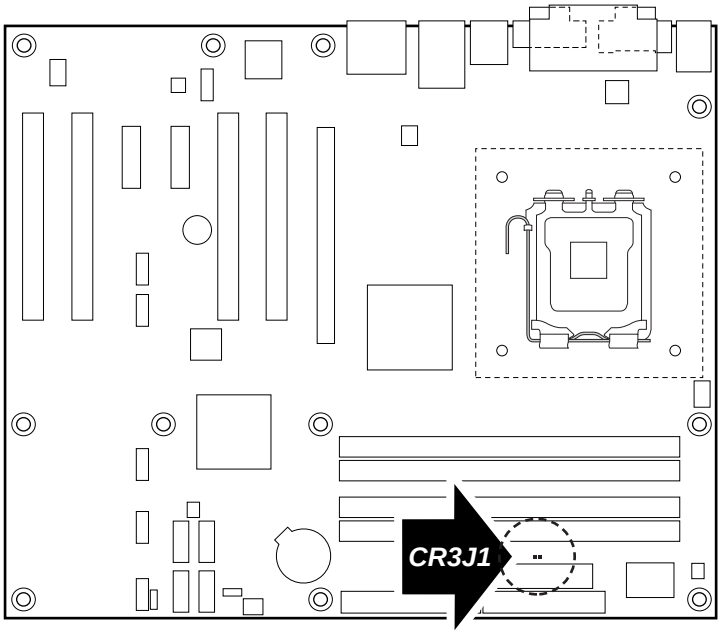

Figure 16. Location of the Standby Power Indicator LED

1.13 Trusted Platform Module (Optional)

The optional Trusted Platform Module (TPM) is a component on the desktop board that is specifically designed to enhance platform security above-and-beyond the capabilities of today's software by providing a protected space for key operations and other security critical tasks. Using both hardware and software, the TPM protects encryption and signature keys at their most vulnerable stages—operations when the keys are being used unencrypted in plain-text form. The TPM is specifically designed to shield unencrypted keys and platform authentication information from software-based attacks.

For information about	Refer to
TPM	http://www.intel.com/design/motherbd/nt/

2 Technical Reference

What This Chapter Contains

2.1 Introduction 47
2.2 Memory Resources 47
2.3 DMA Channels 49
2.4 Fixed I/O Map 50
2.5 PCI Configuration Space Map 51
2.6 Interrupts 52
2.7 PCI Conventional Interrupt Routing Map 53
2.8 Connectors 55
2.9 Jumper Block 67
2.10 Mechanical Considerations 68
2.11 Electrical Considerations 71
2.12 Thermal Considerations 73
2.13 Reliability 75
2.14 Environmental 76
2.15 Regulatory Compliance 77

2.1 Introduction

Sections 2.2 - 2.6 contain several standalone tables. Table 10 describes the system memory map, Table 11 lists the DMA channels, Table 12 shows the I/O map, Table 13 defines the PCI Conventional bus configuration space map, and Table 14 describes the interrupts. The remaining sections in this chapter are introduced by text found with their respective section headings.

2.2 Memory Resources

2.2.1 Addressable Memory

The board utilizes 4 GB of addressable system memory. Typically the address space that is allocated for PCI Conventional bus add-in cards, PCI Express configuration space, BIOS (SPI Flash), and chipset overhead resides above the top of DRAM (total system memory). On a system that has 4 GB of system memory installed, it is not possible to use all of the installed memory due to system address space being allocated for other system critical functions. These functions include the following:

- BIOS/ SPI Flash (2 MB)
- Local APIC (19 MB)
- Digital Media Interface (40 MB)
- Front side bus interrupts (17 MB)
- PCI Express configuration space (256 MB)

- MCH base address registers, internal graphics ranges, PCI Express ports (up to 512 MB)
- Memory-mapped I/O that is dynamically allocated for PCI Conventional and PCI Express add-in cards

The amount of installed memory that can be used will vary based on add-in cards and BIOS settings. Figure 17 shows a schematic of the system memory map. All installed system memory can be used when there is no overlap of system addresses.

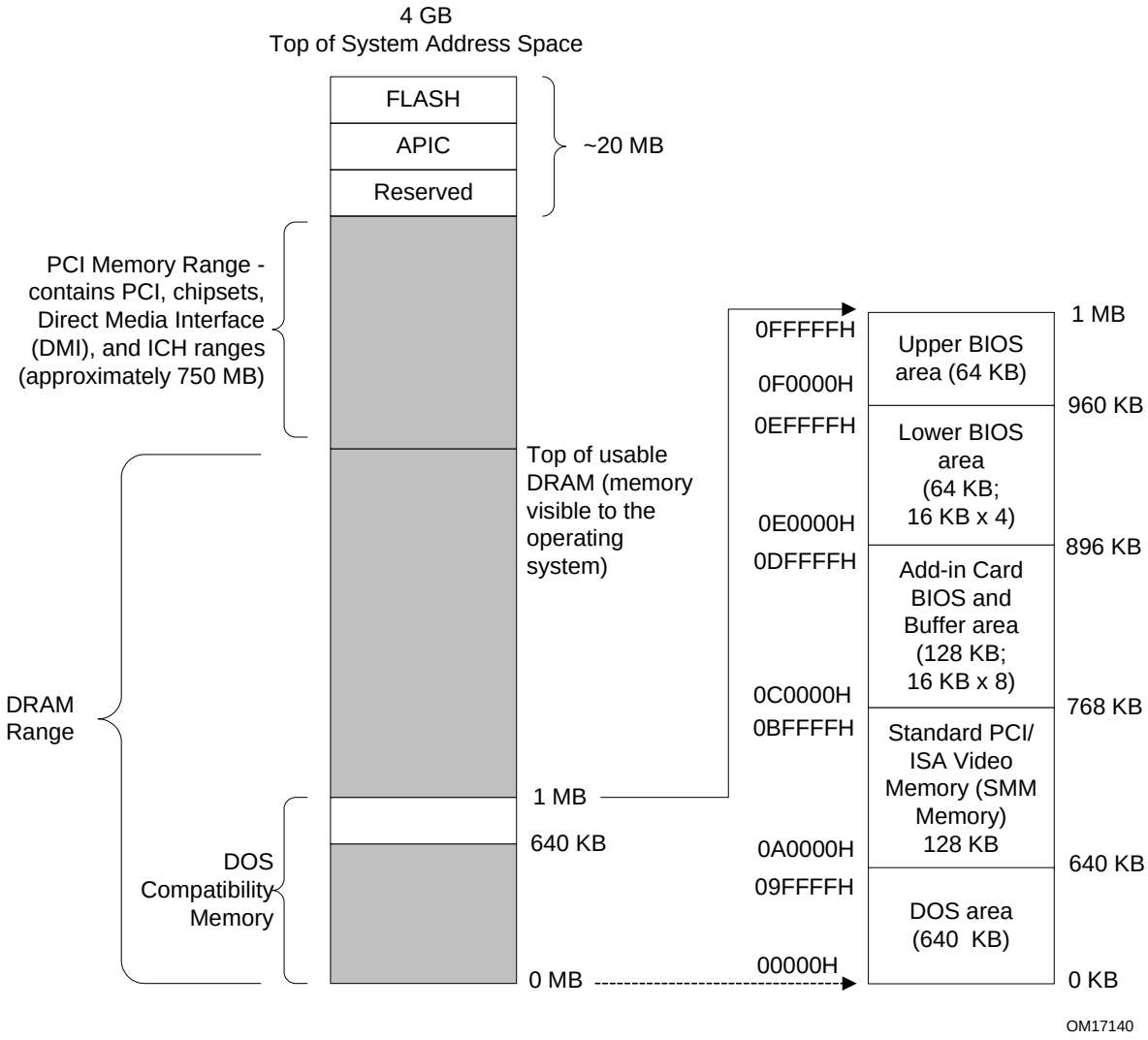

Figure 17. Detailed System Memory Address Map

2.2.2 Memory Map

Table 10 lists the system memory map.

Table 10. System Memory Map

Address Range (decimal)	Address Range (hex)	Size	Description
1024 K - 4194304 K	100000 - FFFFFFFF	4095 MB	Extended memory
960 K - 1024 K	F0000 - FFFFF	64 KB	Runtime BIOS
896 K - 960 K	E0000 - EFFFF	64 KB	Reserved
800 K - 896 K	C8000 - DFFFF	96 KB	Potential available high DOS memory (open to the PCI Conventional bus). Dependent on video adapter used.
640 K - 800 K	A0000 - C7FFF	160 KB	Video memory and BIOS
639 K - 640 K	9FC00 - 9FFFF	1 KB	Extended BIOS data (movable by memory manager software)
512 K - 639 K	80000 - 9FBFF	127 KB	Extended conventional memory
0 K - 512 K	00000 - 7FFFF	512 KB	Conventional memory

2.3 DMA Channels

Table 11. DMA Channels

DMA Channel Number	Data Width	System Resource
0	8 or 16 bits	Open
1	8 or 16 bits	Parallel port
2	8 or 16 bits	Diskette drive
3	8 or 16 bits	Parallel port (for ECP or EPP)
4	8 or 16 bits	DMA controller
5	16 bits	Open
6	16 bits	Open
7	16 bits	Open

2.4 Fixed I/O Map

Table 12. I/O Map

Address (hex)	Size	Description
0000 - 00FF	256 bytes	Used by the Desktop Board D945GNT. Refer to the ICH7 data sheet for dynamic addressing information.
0170 - 0177	8 bytes	Secondary Parallel ATA IDE channel command block
01F0 - 01F7	8 bytes	Primary Parallel ATA IDE channel command block
0228 - 022F (Note 1)	8 bytes	LPT3
0278 - 027F (Note 1)	8 bytes	LPT2
02E8 - 02EF (Note 1)	8 bytes	COM4
02F8 - 02FF (Note 1)	8 bytes	COM2
0374 - 0377	4 bytes	Secondary Parallel ATA IDE channel control block
0377, bits 6:0	7 bits	Secondary IDE channel status port
0378 - 037F	8 bytes	LPT1
03E8 - 03EF	8 bytes	COM3
03F0 - 03F5	6 bytes	Diskette channel
03F4 – 03F7	1 byte	Primary Parallel ATA IDE channel control block
03F8 - 03FF	8 bytes	COM1
04D0 - 04D1	2 bytes	Edge/level triggered PIC
LPTn + 400	8 bytes	ECP port, LPTn base address + 400h
0CF8 - 0CFB (Note 2)	4 bytes	PCI Conventional bus configuration address register
0CF9 (Note 3)	1 byte	Reset control register
0CFC - 0CFF	4 bytes	PCI Conventional bus configuration data register
FFA0 - FFA7	8 bytes	Primary Parallel ATA IDE bus master registers
FFA8 - FFAF	8 bytes	Secondary Parallel ATA IDE bus master registers

Notes:

1. Default, but can be changed to another address range
2. Dword access only
3. Byte access only

NOTE

Some additional I/O addresses are not available due to ICH7 address aliasing. The ICH7 data sheet provides more information on address aliasing.

For information about	Refer to
Obtaining the ICH7 data sheet	Section 1.2, page 15

2.5 PCI Configuration Space Map

Table 13. PCI Configuration Space Map

Bus Number (hex)	Device Number (hex)	Function Number (hex)	Description
00	00	00	Memory controller of Intel 82945G component
00	01	00	PCI Express x16 graphics port (Note 1)
00	02	00	Integrated graphics controller
00	1B	00	Intel High Definition Audio Controller
00	1C	00	PCI Express port 1
00	1C	01	PCI Express port 2
00	1C	02	PCI Express port 3
00	1C	03	PCI Express port 4
00	1D	00	USB UHCI controller 1
00	1D	01	USB UHCI controller 2
00	1D	02	USB UHCI controller 3
00	1D	03	USB UHCI controller 4
00	1D	07	EHCI controller
00	1E	00	PCI bridge
00	1F	00	PCI controller
00	1F	01	Parallel ATA IDE controller
00	1F	02	Serial ATA controller
00	1F	03	SMBus controller
(Note 2)	00	00	Gigabit LAN controller (if present)
(Note 2)	00	00	PCI Conventional bus connector 1
(Note 2)	01	00	PCI Conventional bus connector 2
(Note 2)	02	00	PCI Conventional bus connector 3
(Note 2)	03	00	PCI Conventional bus connector 4
(Note 2)	05	00	IEEE-1394a controller (if present)
(Note 2)	08	00	Intel 82562 10/100 Mbits/sec LAN PLC (if present)

Notes:

1. Present only when a PCI Express x16 graphics card is installed.
2. Bus number is dynamic and can change based on add-in cards used.

2.6 Interrupts

The interrupts can be routed through either the Programmable Interrupt Controller (PIC) or the Advanced Programmable Interrupt Controller (APIC) portion of the ICH7 component. The PIC is supported in Windows 98 SE and Windows ME and uses the first 16 interrupts. The APIC is supported in Windows 2000 and Windows XP and supports a total of 24 interrupts.

Table 14. Interrupts

IRQ	System Resource
NMI	I/O channel check
0	Reserved, interval timer
1	Reserved, keyboard buffer full
2	Reserved, cascade interrupt from slave PIC
3	User available
4	COM1 (Note 1)
5	User available
6	Diskette drive
7	LPT1 (Note 1)
8	Real-time clock
9	User available
10	User available
11	User available
12	Onboard mouse port (if present, else user available)
13	Reserved, math coprocessor
14	Primary Parallel ATA/Serial ATA – Legacy Mode (if present, else user available)
15	Secondary Parallel ATA/Serial ATA – Legacy Mode (if present, else user available)
16 (Note 2)	User available (through PIRQA)
17 (Note 2)	User available (through PIRQB)
18 (Note 2)	User available (through PIRQC)
19 (Note 2)	User available (through PIRQD)
20 (Note 2)	User available (through PIRQE)
21 (Note 2)	User available (through PIRQF)
22 (Note 2)	User available (through PIRQG)
23 (Note 2)	User available (through PIRQH)

Notes:

1. Default, but can be changed to another IRQ.
2. Available in APIC mode only.

2.7 PCI Conventional Interrupt Routing Map

This section describes interrupt sharing and how the interrupt signals are connected between the PCI Conventional bus connectors and onboard PCI Conventional devices. The PCI Conventional specification describes how interrupts can be shared between devices attached to the PCI Conventional bus. In most cases, the small amount of latency added by interrupt sharing does not affect the operation or throughput of the devices. In some special cases where maximum performance is needed from a device, a PCI Conventional device should not share an interrupt with other PCI Conventional devices. Use the following information to avoid sharing an interrupt with a PCI Conventional add-in card.

PCI Conventional devices are categorized as follows to specify their interrupt grouping:

- INTA: By default, all add-in cards that require only one interrupt are in this category. For almost all cards that require more than one interrupt, the first interrupt on the card is also classified as INTA.
- INTB: Generally, the second interrupt on add-in cards that require two or more interrupts is classified as INTB. (This is not an absolute requirement.)
- INTC and INTD: Generally, a third interrupt on add-in cards is classified as INTC and a fourth interrupt is classified as INTD.

The ICH7 has eight Programmable Interrupt Request (PIRQ) input signals. All PCI Conventional interrupt sources either onboard or from a PCI Conventional add-in card connect to one of these PIRQ signals. Some PCI Conventional interrupt sources are electrically tied together on the board and therefore share the same interrupt. Table 15 shows an example of how the PIRQ signals are routed.

For example, using Table 15 as a reference, assume an add-in card using INTA is plugged into PCI Conventional bus connector 3. In PCI bus connector 3, INTA is connected to PIRQB, which is already connected to the ICH7 audio controller. The add-in card in PCI Conventional bus connector 3 now shares an interrupt with the onboard interrupt source.

Table 15. PCI Interrupt Routing Map

PCI Interrupt Source	ICH7 PIRQ Signal Name							
	PIRQA	PIRQB	PIRQC	PIRQD	PIRQE	PIRQF	PIRQG	PIRQH
ICH7 LAN					INTA			
PCI bus connector 1					INTD	INTA	INTB	INTC
PCI bus connector 2					INTC	INTB	INTA	INTD
PCI bus connector 3	INTD	INTC	INTA	INTB				
PCI bus connector 4			INTB	INTA		INTC	INTD	
IEEE-1394a controller (optional)		INTA						

NOTE

In PIC mode, the ICH7 can connect each PIRQ line internally to one of the IRQ signals (3, 4, 5, 6, 7, 9, 10, 11, 12, 14, and 15). Typically, a device that does not share a PIRQ line will have a unique interrupt. However, in certain interrupt-constrained situations, it is possible for two or more of the PIRQ lines to be connected to the same IRQ signal. Refer to Table 14 for the allocation of PIRQ lines to IRQ signals in APIC mode.

PCI interrupt assignments to the USB ports, Serial ATA ports, and PCI Express ports are dynamic.

2.8 Connectors

CAUTION

Only the following connectors have overcurrent protection: back panel USB, front panel USB, and PS/2.

The other internal connectors are not overcurrent protected and should connect only to devices inside the computer's chassis, such as fans and internal peripherals. Do not use these connectors to power devices external to the computer's chassis. A fault in the load presented by the external devices could cause damage to the computer, the power cable, and the external devices themselves.

This section describes the board's connectors. The connectors can be divided into these groups:

- Back panel I/O connectors (see page 57)
- Component-side I/O connectors (see page 55)

2.8.1 Back Panel Connectors

The back panel configuration is dependent upon which audio subsystem is present. The configurations are as follows:

- 8-channel (7.1) audio subsystem (five analog audio output connectors and one digital audio output connector), described on page 56
- 6-channel (5.1) audio subsystem (three analog audio output connectors), described on page 57

2.8.1.1 Back Panel Connectors For 8-Channel (7.1) Audio Subsystem

Figure 18 shows the location of the back panel connectors for boards equipped with the 8-channel (7.1) audio subsystem. The back panel connectors are color-coded. The figure legend (Table 16) lists the colors used (when applicable).

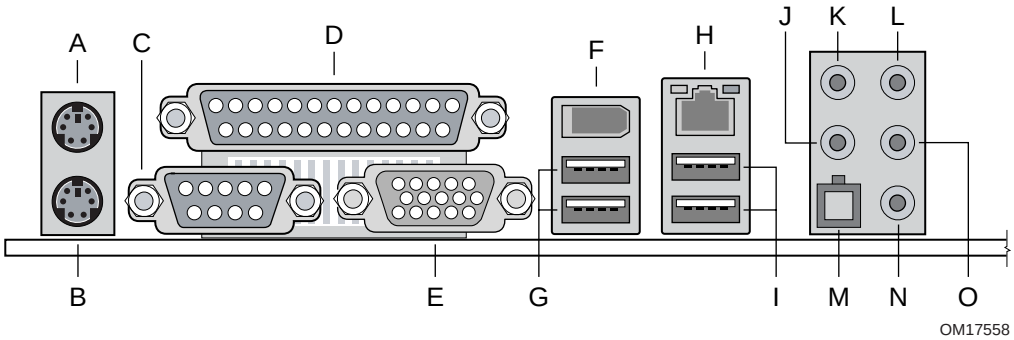

Figure 18. Back Panel Connectors for 8-Channel (7.1) Audio Subsystem

Table 16 lists the back panel connectors identified in Figure 18.

NOTE

The back panel audio line out connector is designed to power headphones or amplified speakers only. Poor audio quality occurs if passive (non-amplified) speakers are connected to this output.

Table 16. Back Panel Connectors Shown in Figure 18

Item/callout from Figure 18	Description
A	PS/2 mouse port [Green]
B	PS/2 keyboard port [Purple]
C	Serial port A [Teal]
D	Parallel port [Burgundy]
E	VGA port
F	IEEE-1394a connector
G	USB ports (two)
H	LAN
I	USB ports (two)
J	Center channel and LFE (subwoofer) audio out/ Retasking Jack [Orange]
K	Surround left/right channel audio out/Retasking Jack [Black]
L	Audio line in/Retasking Jack [Blue]
M	Digital audio out optical
N	Mic in/Retasking Jack [Pink]
O	Front left/right channel audio out/Two channel audio line out/Retasking Jack [Lime green]

2.8.1.2 Back Panel Connectors For 6-Channel (5.1) Audio Subsystem

Figure 19 shows the location of the back panel connectors for boards equipped with the 6-channel (5.1) audio subsystem. The back panel connectors are color-coded. The figure legend (Table 17) lists the colors used (when applicable).

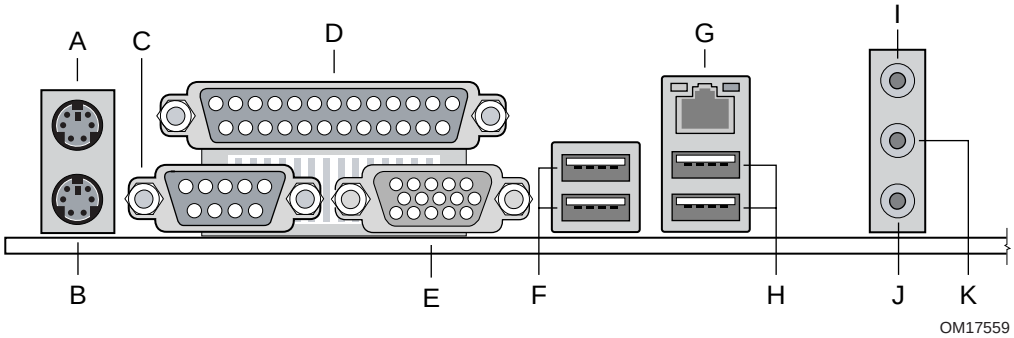

Figure 19. Back Panel Connectors for 6-Channel (5.1) Audio Subsystem

Table 17 lists the back panel connectors identified in Figure 19.

NOTE

The back panel audio line out connector is designed to power headphones or amplified speakers only. Poor audio quality occurs if passive (non-amplified) speakers are connected to this output.

Table 17. Back Panel Connectors Shown in Figure 19

Item/callout from Figure 19	Description
A	PS/2 mouse port [Green]
B	PS/2 keyboard port [Purple]
C	Serial port A [Teal]
D	Parallel port [Burgundy]
E	VGA port
F	USB ports (two)
G	LAN
H	USB ports (two)
I	Audio line in/Retasking Jack [Blue]
J	Mic in/Retasking Jack [Pink]
K	Front left/right channel audio out/Two channel audio line out/Retasking Jack [Lime green]

2.8.2 Component-side Connectors

Figure 20 shows the locations of the component-side connectors.

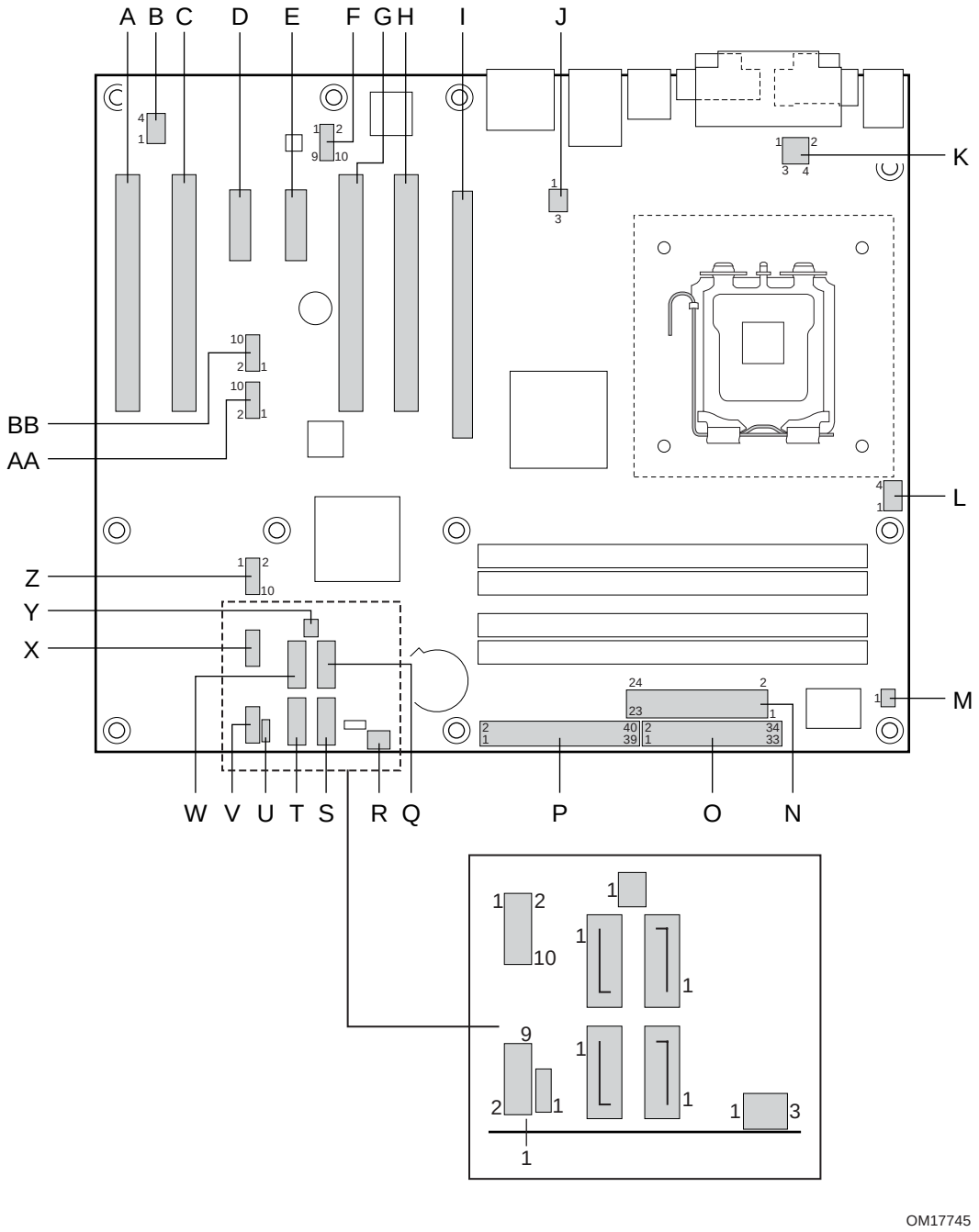

Figure 20. Component-side Connectors

Table 18 lists the component-side connectors identified in Figure 20.

Table 18. Component-side Connectors Shown in Figure 20

Item/callout from Figure 20	Description
A	PCI Conventional bus add-in card connector 4
B	Auxiliary fan connector (optional)
C	PCI Conventional bus add-in card connector 3
D	PCI Express x1 bus add-in card connector 2
E	PCI Express x1 bus add-in card connector 1
F	Front panel audio connector
G	PCI Conventional bus add-in card connector 2
H	PCI Conventional bus add-in card connector 1
I	PCI Express x16 bus add-in card connector
J	Rear chassis fan connector
K	+12V power connector (ATX12V)
L	Processor fan connector
M	SCSI LED connector (optional)
N	Power connector
O	Diskette drive connector
P	Parallel ATA IDE connector
Q	Serial ATA connector 3
R	Front chassis fan connector
S	Serial ATA connector 2
T	Serial ATA connector 0
U	Auxiliary front panel power LED connector
V	Front panel connector
W	Serial ATA connector 1
X	Front panel USB connector
Y	Chassis intrusion connector
Z	Front panel USB connector
AA	Front panel IEEE-1394a connector (optional)
BB	Front panel IEEE-1394a connector (optional)

Table 19. Front Panel Audio Connector

Pin	Signal Name	Pin	Signal Name
1	Port E [Port 1] Left Channel	2	Ground
3	Port E [Port 1] Right Channel	4	Presence# (dongle present)
5	Port F [Port 2] Right Channel	6	Port E [Port 1] Sense return (jack detection)
7	Port E [Port 1] and Port F [Port 2] Sense send (jack detection)	8	Key
9	Port F [Port 2] Left Channel	10	Port F [Port 2] Sense return (jack detection)

INTEGRATOR'S NOTE

The front panel audio connector is colored yellow.

Table 20. Chassis Intrusion Connector

Pin	Signal Name
1	Intruder
2	Ground

Table 21. SCSI Hard Drive Activity LED Connector (Optional)

Pin	Signal Name
1	SCSI_ACT#
2	No connect

Table 22. Serial ATA Connectors

Pin	Signal Name
1	Ground
2	TXP
3	TXN
4	Ground
5	RXN
6	RXP
7	Ground

Table 23. Processor Fan Connector

Pin	Signal Name
1	Ground
2	+12 V
3	FAN_TACH
4	FAN_CONTROL

2.8.2.1 Chassis Fan Connectors

The board has two standard and one optional chassis fan connectors:

- Front chassis fan
- Rear chassis fan
- Auxiliary fan connector (optional)

Table 24 lists the signal names for the front and rear chassis fan connectors. Table 26 lists the signal names for the auxiliary fan connector.

Table 24. Front and Rear Chassis Fan Connectors

Pin	Signal Name
1	FAN_CONTROL
2	+12 V
3	FAN_TACH

Table 25. Auxiliary Fan Connector (optional)

Pin	Signal Name
1	Ground
2	+12 V
3	FAN_TACH (Note)
4	FAN_CONTROL

Note: The tachometer output is not monitored by the hardware monitoring and fan control ASIC.

2.8.2.2 Power Supply Connectors

The board has power supply connectors:

- **Main power** – a 2 x 12 connector. This connector is compatible with 2 x 10 connectors previously used on Intel desktop boards. The board supports the use of ATX12V power supplies with either 2 x 10 or 2 x 12 main power cables. When using a power supply with a 2 x 10 main power cable, attach that cable on the rightmost pins of the main power connector, leaving pins 11, 12, 23, and 24 unconnected.
- **ATX12V power** – a 2 x 2 connector. This connector provides power directly to the processor voltage regulator and must always be used. Failure to do so will prevent the board from booting.

INTEGRATOR'S NOTE

When using high wattage PCI Express x16 graphics cards, use a power supply with a 2 x 12 main power cable. The 2 x 12 main power cable can provide up to 144 W of power from the +12 V rail.

Table 26. Main Power Connector

Pin	Signal Name	Pin	Signal Name
1	+3.3 V	13	+3.3 V
2	+3.3 V	14	-12 V
3	Ground	15	Ground
4	+5 V	16	PS-ON# (power supply remote on/off)
5	Ground	17	Ground
6	+5 V	18	Ground
7	Ground	19	Ground
8	PWRGD (Power Good)	20	No connect
9	+5 V (Standby)	21	+5 V
10	+12 V	22	+5 V
11	+12 V (Note)	23	+5 V (Note)
12	2 x 12 connector detect (Note)	24	Ground (Note)

Note: When using a 2 x 10 power supply cable, this pin will be unconnected.

Table 27. ATX12V Power Connector

Pin	Signal Name	Pin	Signal Name
1	Ground	2	Ground
3	+12 V	4	+12 V

2.8.2.3 Add-in Card Connectors

The board has the following add-in card connectors:

- PCI Express x16: one connector supporting simultaneous transfer speeds up to 8 GBytes/sec.
- PCI Express x1: two PCI Express x1 connectors. The x1 interfaces support simultaneous transfer speeds up to 500 MBytes/sec.
- PCI Conventional (rev 2.3 compliant) bus: four PCI Conventional bus add-in card connectors. The SMBus is routed to PCI Conventional bus connector 2 only (ATX expansion slot 6). PCI Conventional bus add-in cards with SMBus support can access sensor data and other information residing on the board.

Note the following considerations for the PCI Conventional bus connectors:

- All of the PCI Conventional bus connectors are bus master capable.
- SMBus signals are routed to PCI Conventional bus connector 2. This enables PCI Conventional bus add-in boards with SMBus support to access sensor data on the boards. The specific SMBus signals are as follows:
  - The SMBus clock line is connected to pin A40.
  - The SMBus data line is connected to pin A41.

NOTE

The PCI Express x16 connector is configured to support only a PCI Express x1 link when the Intel GMA950 graphics controller is enabled.

2.8.2.4 Auxiliary Front Panel Power/Sleep LED Connector

Pins 1 and 3 of this connector duplicate the signals on pins 2 and 4 of the front panel connector.

Table 28. Auxiliary Front Panel Power/Sleep LED Connector

Pin	Signal Name	In/Out	Description
1	HDR_BLNK_GRN	Out	Front panel green LED
2	Not connected		
3	HDR_BLNK_YEL	Out	Front panel yellow LED

2.8.2.5 Front Panel Connector

This section describes the functions of the front panel connector. Table 29 lists the signal names of the front panel connector. Figure 21 is a connection diagram for the front panel connector.

Table 29. Front Panel Connector

Pin	Signal	In/Out	Description	Pin	Signal	In/Out	Description
Hard Drive Activity LED [Yellow]				**Power LED [Green]**			
1	HD_PWR	Out	Hard disk LED pull-up (750 Ω) to +5 V	2	HDR_BLNK_ GRN	Out	Front panel green LED
3	HAD#	Out	Hard disk active LED	4	HDR_BLNK_ YEL	Out	Front panel yellow LED
Reset Switch [Purple]				**On/Off Switch [Red]**			
5	Ground		Ground	6	FPBUT_IN	In	Power switch
7	FP_RESET#	In	Reset switch	8	Ground		Ground
Power				**Not Connected**			
9	+5 V		Power	10	N/C		Not connected

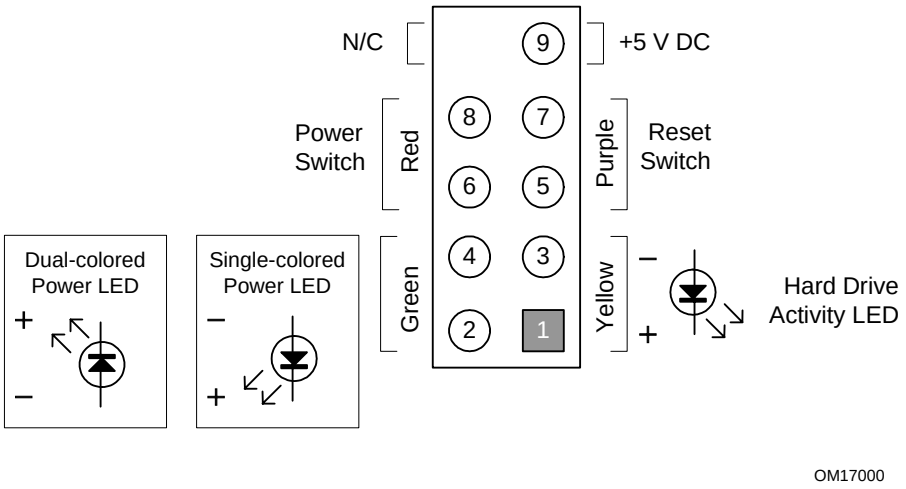

Figure 21. Connection Diagram for Front Panel Connector

2.8.2.5.1 Hard Drive Activity LED Connector [Yellow]

Pins 1 and 3 [Yellow] can be connected to an LED to provide a visual indicator that data is being read from or written to a hard drive. Proper LED function requires one of the following:

- A Serial ATA hard drive connected to an onboard Serial ATA connector
- An IDE hard drive connected to an onboard IDE connector

2.8.2.5.2 Reset Switch Connector [Purple]

Pins 5 and 7 [Purple] can be connected to a momentary single pole, single throw (SPST) type switch that is normally open. When the switch is closed, the board resets and runs the POST.

2.8.2.5.3 Power/Sleep LED Connector [Green]

Pins 2 and 4 [Green] can be connected to a one- or two-color LED. Table 30 shows the possible states for a one-color LED. Table 31 shows the possible states for a two-color LED.

Table 30. States for a One-Color Power LED

LED State	Description
Off	Power off/sleeping
Steady Green	Running

Table 31. States for a Two-Color Power LED

LED State	Description
Off	Power off
Steady Green	Running
Steady Yellow	Sleeping

NOTE

The colors listed in Table 30 and Table 31 are suggested colors only. Actual LED colors are product- or customer-specific.

2.8.2.5.4 Power Switch Connector [Red]

Pins 6 and 8 [Red] can be connected to a front panel momentary-contact power switch. The switch must pull the SW_ON# pin to ground for at least 50 ms to signal the power supply to switch on or off. (The time requirement is due to internal debounce circuitry on the board.) At least two seconds must pass before the power supply will recognize another on/off signal.

2.8.2.6 Front Panel USB Connectors

Figure 22 is a connection diagram for the front panel USB connectors.

INTEGRATOR'S NOTES

- *The +5 V DC power on the USB connector is fused.*
- *Pins 1, 3, 5, and 7 comprise one USB port.*
- *Pins 2, 4, 6, and 8 comprise one USB port.*
- *Use only a front panel USB connector that conforms to the USB 2.0 specification for high-speed USB devices.*

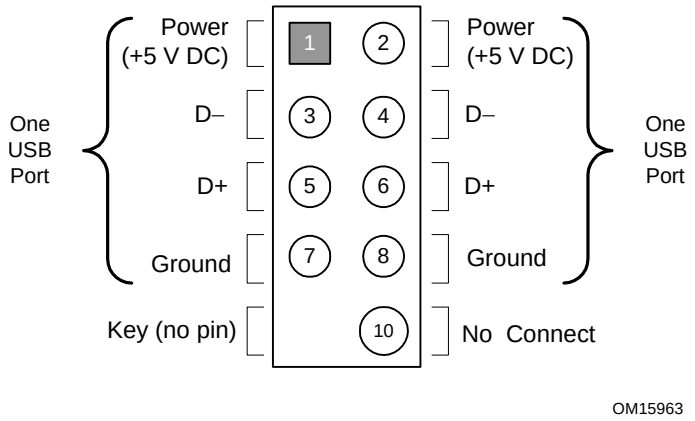

Figure 22. Connection Diagram for Front Panel USB Connectors

2.8.2.7 Front Panel IEEE 1394a Connectors (Optional)

Figure 23 is a connection diagram for the optional IEEE 1394a connectors.

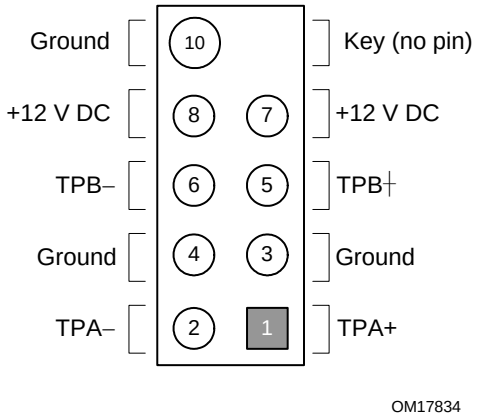

Figure 23. Connection Diagram for IEEE 1394a Connectors

INTEGRATOR'S NOTES

- *The IEEE 1394a connectors are colored blue.*
- *The +12 V DC power on the IEEE 1394a connectors is fused.*
- *Each IEEE 1394a connector provides one IEEE 1394a port.*

2.9 Jumper Block

CAUTION

Do not move the jumper with the power on. Always turn off the power and unplug the power cord from the computer before changing a jumper setting. Otherwise, the board could be damaged.

Figure 24 shows the location of the jumper block. The jumper block determines the BIOS Setup program's mode. Table 32 describes the jumper settings for the three modes: normal, configure, and recovery. When the jumper is set to configure mode and the computer is powered-up, the BIOS compares the processor version and the microcode version in the BIOS and reports if the two match.

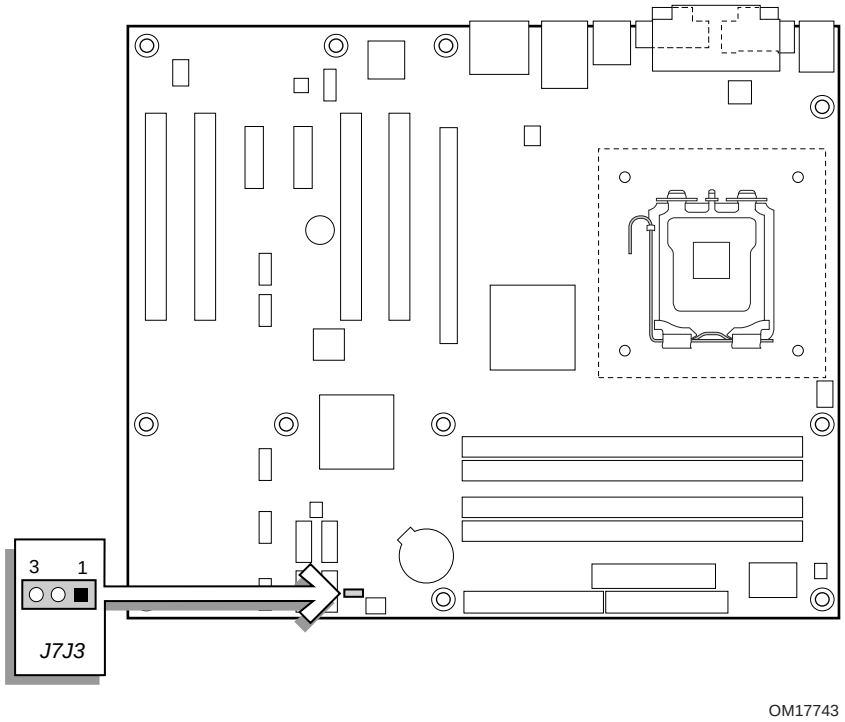

Figure 24. Location of the Jumper Block

Table 32. BIOS Setup Configuration Jumper Settings

Function/Mode	Jumper Setting		Configuration
Normal	1-2	3 1	The BIOS uses current configuration information and passwords for booting.
Configure	2-3	3 1	After the POST runs, Setup runs automatically. The maintenance menu is displayed.
Recovery	None	3 1	The BIOS attempts to recover the BIOS configuration. A recovery diskette is required.

2.10 Mechanical Considerations

2.10.1 Form Factor

The board is designed to fit into an ATX-form-factor chassis. Figure 25 illustrates the mechanical form factor of the board. Dimensions are given in inches [millimeters]. The outer dimensions are 12.00 inches by 9.60 inches [304.80 millimeters by 243.84 millimeters]. Location of the I/O connectors and mounting holes are in compliance with the ATX specification.

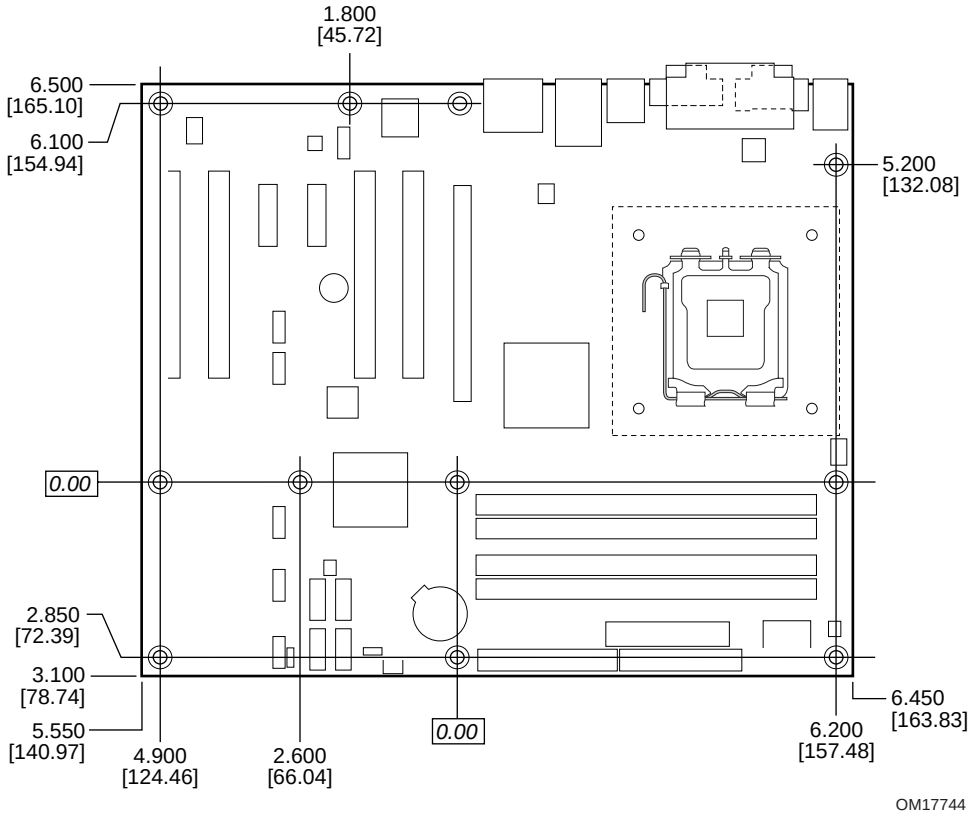

Figure 25. Board Dimensions

2.10.2 I/O Shield

The back panel I/O shield for the board must meet specific dimension and material requirements. Systems based on this board need the back panel I/O shield to pass certification testing. Figure 26 shows the I/O shield for boards with the 8-channel (7.1) audio subsystem. Figure 27 shows the I/O shield for boards with the 6-channel (5.1) audio subsystem. Dimensions are given in millimeters [inches]. The figures also indicate the position of each cutout. Additional design considerations for I/O shields relative to chassis requirements are described in the ATX specification.

NOTE

The I/O shield drawings in this document are for reference only. I/O shields compliant with the ATX chassis specification 2.03 are available from Intel.

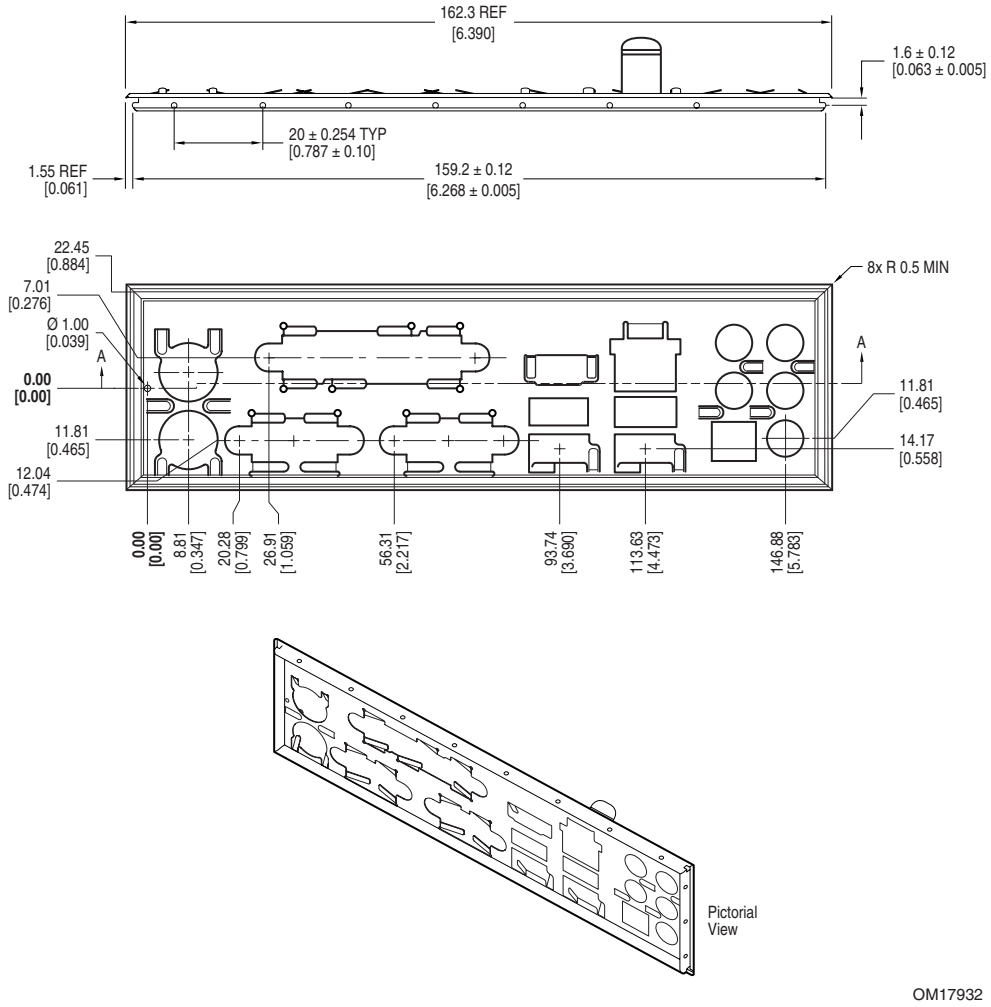

Figure 26. I/O Shield Dimensions for Boards with the 8-Channel (7.1) Audio Subsystem

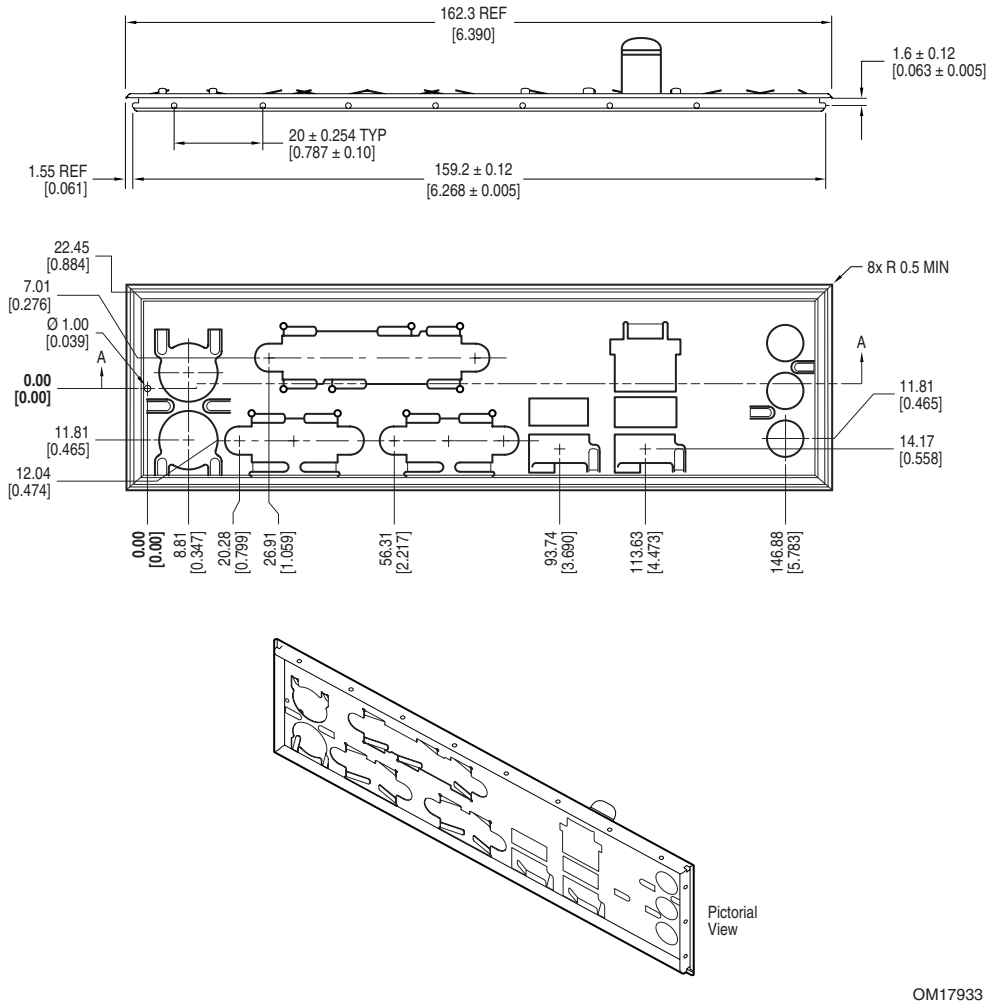

Figure 27. I/O Shield Dimensions for Boards with the 6-Channel (5.1) Audio Subsystem

2.11 Electrical Considerations

2.11.1 DC Loading

Table 33 lists the DC loading characteristics of the boards. This data is based on a DC analysis of all active components within the board that impact its power delivery subsystems. The analysis does not include PCI add-in cards. Minimum values assume a light load placed on the board that is similar to an environment with no applications running and no USB current draw. Maximum values assume a load placed on the board that is similar to a heavy gaming environment with a 500 mA current draw per USB port. These calculations are not based on specific processor values or memory configurations but are based on the minimum and maximum current draw possible from the board's power delivery subsystems to the processor, memory, and USB ports.

Use the datasheets for add-in cards, such as PCI, to determine the overall system power requirements. The selection of a power supply at the system level is dependent on the system's usage model and not necessarily tied to a particular processor speed.

Table 33. DC Loading Characteristics

Mode	DC Power	DC Current at:				
		+3.3 V	+5 V	+12 V	-12 V	+5 VSB
Minimum loading	275 W	3.5 A	12 A	17 A	0 A	0.34 A (S0) 1.00 A (S3)
Maximum loading	500 W	16 A	23 A	29 A	0.20 A	0.34 A (S0) 1.10 A (S3)

2.11.2 Add-in Board Considerations

The boards are designed to provide 2 A (average) of +5 V current for each add-in board. The total +5 V current draw for both boards is as follows: a fully loaded D945GNT board (all six expansion slots and the PCI Express x16 slot filled) must not exceed 14 A.

2.11.3 Fan Connector Current Capability

CAUTION

The processor fan must be connected to the processor fan connector, not to a chassis fan connector. Connecting the processor fan to a chassis fan connector may result in onboard component damage that will halt fan operation.

Table 34 lists the current capability of the fan connectors.

Table 34. Fan Connector Current Capability

Fan Connector	Maximum Available Current
Processor fan	3.0 A
Front chassis fan	1.5 A
Rear chassis fan	1.5 A
Auxiliary fan (optional)	3.0 A

2.11.4 Power Supply Considerations

CAUTION

The +5 V standby line for the power supply must be capable of providing adequate +5 V standby current. Failure to do so can damage the power supply. The total amount of standby current required depends on the wake devices supported and manufacturing options.

System integrators should refer to the power usage values listed in Table 33 when selecting a power supply for use with the board.

Additional power required will depend on configurations chosen by the integrator.

The power supply must comply with the following recommendations found in the indicated sections of the ATX form factor specification.

- The potential relation between 3.3 VDC and +5 VDC power rails (Section 4.2)
- The current capability of the +5 VSB line (Section 4.2.1.2)
- All timing parameters (Section 4.2.1.3)
- All voltage tolerances (Section 4.2.2)

2.12 Thermal Considerations

CAUTION

A chassis with a maximum internal ambient temperature of 38 °C at the processor fan inlet is a requirement. Use a processor heatsink that provides omni-directional airflow (similar to the type shown in Figure 28) to maintain required airflow across the processor voltage regulator area.

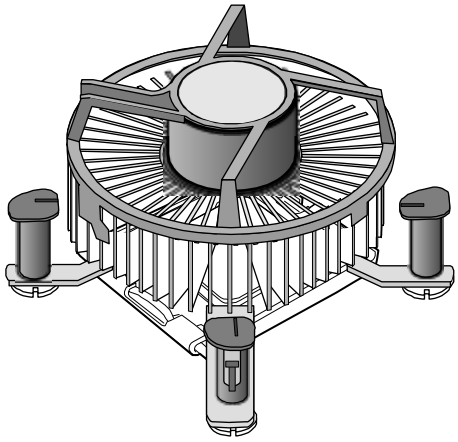

Figure 28. Processor Heatsink for Omni-directional Airflow

CAUTION

Failure to ensure appropriate airflow may result in reduced performance of both the processor and/or voltage regulator or, in some instances, damage to the board. For a list of chassis that have been tested with Intel desktop boards please refer to the following website:

http://developer.intel.com/design/motherbd/cooling.htm

All responsibility for determining the adequacy of any thermal or system design remains solely with the reader. Intel makes no warranties or representations that merely following the instructions presented in this document will result in a system with adequate thermal performance.

CAUTION

Ensure that the ambient temperature does not exceed the board's maximum operating temperature. Failure to do so could cause components to exceed their maximum case temperature and malfunction. For information about the maximum operating temperature, see the environmental specifications in Section 2.14.

CAUTION

Ensure that proper airflow is maintained in the processor voltage regulator circuit. Failure to do so may result in damage to the voltage regulator circuit. The processor voltage regulator area (item A in Figure 29) can reach a temperature of up to 85 °C in an open chassis.

Figure 29 shows the locations of the localized high temperature zones.

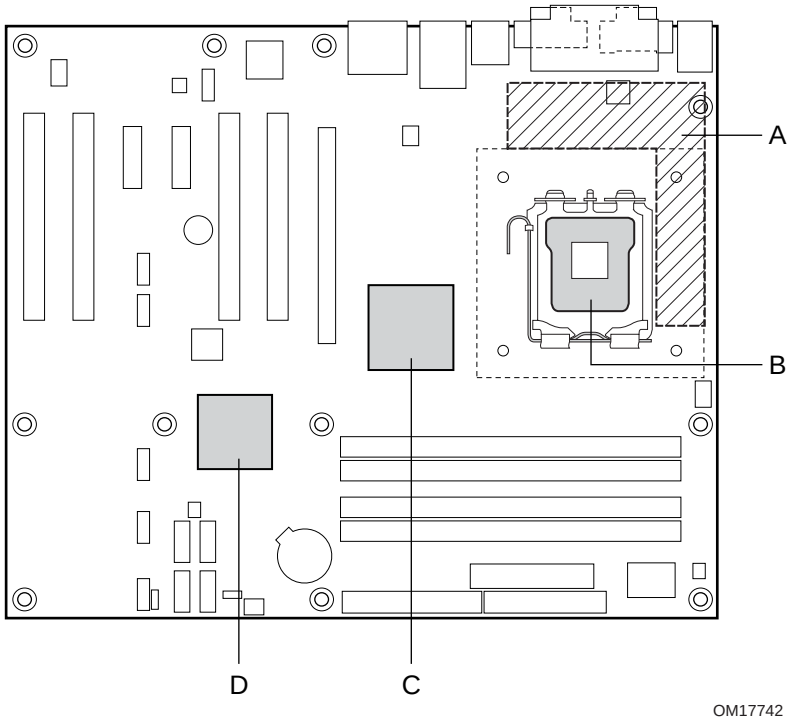

Item	Description
A	Processor voltage regulator area
B	Processor
C	Intel 82945G GMCH
D	Intel 82801G ICH7

Figure 29. Localized High Temperature Zones

Table 35 provides maximum case temperatures for the components that are sensitive to thermal changes. The operating temperature, current load, or operating frequency could affect case temperatures. Maximum case temperatures are important when considering proper airflow to cool the board.

Table 35. Thermal Considerations for Components

Component	Maximum Case Temperature
Intel Pentium 4 processor	For processor case temperature, see processor datasheets and processor specification updates
Intel 82945G GMCH	99 ^{o}C (under bias)
Intel 82801G ICH7	110 ^{o}C (under bias, without heatsink) 99 ^{o}C (under bias, with heatsink)

For information about	Refer to
Intel Pentium 4 processor datasheets and specification updates	Section 1.2, page 15

2.13 Reliability

The Mean Time Between Failures (MTBF) prediction is calculated using component and subassembly random failure rates. The calculation is based on the Bellcore Reliability Prediction Procedure, TR-NWT-000332, Issue 4, September 1991. The MTBF prediction is used to estimate repair rates and spare parts requirements.

The MTBF data is calculated from predicted data at 55 ºC. The MTBF for the D945GNT board is 108,165 hours.

2.14 Environmental

Table 36 lists the environmental specifications for the board.

Table 36. Environmental Specifications

Parameter	Specification		
Temperature			
Non-Operating	-40 °C to +70 °C		
Operating	0 °C to +55 °C		
Shock			
Unpackaged	50 g trapezoidal waveform		
	Velocity change of 170 inches/second		
Packaged	Half sine 2 millisecond		
	Product Weight (pounds)	Free Fall (inches)	Velocity Change (inches/sec)
	<20	36	167
	21-40	30	152
	41-80	24	136
	81-100	18	118
Vibration			
Unpackaged	5 Hz to 20 Hz: 0.01 g^2 Hz sloping up to 0.02 g^2 Hz		
	20 Hz to 500 Hz: 0.02 g^2 Hz (flat)		
Packaged	5 Hz to 40 Hz: 0.015 g^2 Hz (flat)		
	40 Hz to 500 Hz: 0.015 g^2 Hz sloping down to 0.00015 g^2 Hz		

2.15 Regulatory Compliance

This section describes the Desktop Boards' compliance with U.S. and international safety and electromagnetic compatibility (EMC) regulations.

2.15.1 Safety Regulations

Table 37 lists the safety regulations that the Desktop Board D945GNT complies with when correctly installed in a compatible host system.

Table 37. Safety Regulations

Regulation	Title
UL 60950-1:2003/ CSA C22.2 No. 60950-1-03	Information Technology Equipment - Safety - Part 1: General Requirements (USA and Canada)
EN 60950-1:2002	Information Technology Equipment - Safety - Part 1: General Requirements (European Union)
IEC 60950-1:2001, First Edition	Information Technology Equipment - Safety - Part 1: General Requirements (International)

2.15.2 EMC Regulations

Table 38 lists the EMC regulations the Desktop Board D945GNT complies with when correctly installed in a compatible host system.

Table 38. EMC Regulations

Regulation	Title
FCC (Class B)	Title 47 of the Code of Federal Regulations, Parts 2 and 15, Subpart B, Radio Frequency Devices. (USA)
ICES-003 (Class B)	Interference-Causing Equipment Standard, Digital Apparatus. (Canada)
EN55022: 1998 (Class B)	Limits and methods of measurement of Radio Interference Characteristics of Information Technology Equipment. (European Union)
EN55024: 1998	Information Technology Equipment – Immunity Characteristics Limits and methods of measurement. (European Union)
AS/NZS CISPR 22 (Class B)	Australian Communications Authority, Standard for Electromagnetic Compatibility. (Australia and New Zealand)
CISPR 22, 3rd Edition (Class B)	Limits and methods of measurement of Radio Disturbance Characteristics of Information Technology Equipment. (International)
CISPR 24: 1997	Information Technology Equipment – Immunity Characteristics – Limits and Methods of Measurements. (International)
VCCI (Class B)	Voluntary Control for Interference by Information Technology Equipment (Japan)

2.15.2.1 FCC Compliance Statement (USA)

Product Type: D945GNT Desktop Board

This device complies with Part 15 of the FCC Rules. Operation is subject to the following two conditions: (1) This device may not cause harmful interference, and (2) this device must accept any interference received, including interference that may cause undesired operation.

This equipment has been tested and found to comply with the limits for a Class B digital device, pursuant to Part 15 of the FCC Rules. These limits are designed to provide reasonable protection against harmful interference in a residential environment. This equipment generates, uses, and can radiate radio frequency energy and, if not installed and used in accordance with the instructions, may cause harmful interference to radio communications. However, there is no guarantee that interference will not occur in a particular installation. If this equipment does cause harmful interference to radio or television reception, which can be determined by turning the equipment off and on, the user is encouraged to try to correct the interference by one or more of the following measures:

- Reorient or relocate the receiving antenna.
- Increase the separation between the equipment and the receiver.
- Connect the equipment to a different electrical branch circuit from that to which the receiver is connected.
- Consult the dealer or an experienced radio/TV technician for help.

Any changes or modifications to the equipment not expressly approved by Intel Corporation could void the user's authority to operate the equipment.

Tested to comply with FCC standards for home or office use.

2.15.2.2 Canadian Compliance Statement

This Class B digital apparatus complies with Canadian ICES-003.

Cet appereil numérique de la classe B est conforme à la norme NMB-003 du Canada.

2.15.3 European Union Declaration of Conformity Statement

We, Intel Corporation, declare under our sole responsibility that the product: Intel Desktop Board D945GNT is in conformity with all applicable essential requirements necessary for CE marking, following the provisions of the European Council Directive 89/336/EEC (EMC Directive) and Council Directive 73/23/EEC (Safety/Low Voltage Directive).

The product is properly CE marked demonstrating this conformity and is for distribution within all member states of the EU with no restrictions.

CE

This product follows the provisions of the European Directives 89/336/EEC and 73/23/EEC.

Dansk Dette produkt er i overensstemmelse med det europæiske direktiv 89/336/EEC & 73/23/EEC.

Dutch Dit product is in navolging van de bepalingen van Europees Directief 89/336/EEC & 73/23/EEC.

Suomi Tämä tuote noudattaa EU-direktiivin 89/336/EEC & 73/23/EEC määräyksiä.

Français Ce produit est conforme aux exigences de la Directive Européenne 89/336/EEC & 73/23/EEC.

Deutsch Dieses Produkt entspricht den Bestimmungen der Europäischen Richtlinie 89/336/EEC & 73/23/EEC.

Icelandic Þessi vara stenst reglugerð Evrópska Efnahags Bandalagsins númer 89/336/ EEC & 73/23/EEC.

Italiano Questo prodotto è conforme alla Direttiva Europea 89/336/EEC & 73/23/EEC.

Norsk Dette produktet er i henhold til bestemmelsene i det europeiske direktivet 89/336/ EEC & 73/23/EEC.

Portuguese Este produto cumpre com as normas da Diretiva Européia 89/336/EEC & 73/23/EEC.

Español Este producto cumple con las normas del Directivo Europeo 89/336/EEC & 73/23/EEC.

Svenska Denna produkt har tillverkats i enlighet med EG-direktiv 89/336/EEC & 73/23/EEC.

2.15.4 Recycling Considerations

Intel encourages its customers to recycle its products and their components (e.g., batteries, circuit boards, plastic enclosures, etc.) whenever possible. In the U.S., a list of recyclers in your area can be found at:
http://www.eiae.org/

In the absence of a viable recycling option, products and their components must be disposed of in accordance with all applicable local environmental regulations.

2.15.5 Product Certification Markings (Board Level)

Table 39 lists the board's product certification markings.

Table 39. Product Certification Markings

Description	Marking
UL joint US/Canada Recognized Component mark. Includes adjacent UL file number for Intel Desktop Boards: E210882 (component side).	c US
FCC Declaration of Conformity logo mark for Class B equipment; includes Intel name and D945GNT model designation (component side).	Trade Name Model Number Tested To Comply With FCC Standards FOR HOME OR OFFICE USE
CE mark. Declares compliance to European Union (EU) EMC directive (89/336/EEC) and Low Voltage directive (73/23/EEC) (component side). The CE mark should also be on the shipping container.	CE
Australian Communications Authority (ACA) C-Tick mark. Includes adjacent Intel supplier code number, N-232. The C-tick mark should also be on the shipping container.	
Printed wiring board manufacturer's recognition mark: consists of a unique UL recognized manufacturer's logo, along with a flammability rating (solder side).	V-0 or 94V-0
Lead – Free Certification Pb-free certification markings are per the JEDEC spec. Pb-free symbol - PB_FREE_SILK e1 symbol (specifies the composition of the solder paste) - E1_SILK 2ND Level Interconnect (used until a board is considered Pb-free per the RoHS definition – This must follow the Pb-free symbol. It is abbreviated per spec) - 2ND_LVL_INTCT_SILK 260 °C (specifies maximum safe processing temperature) - 260C_SILK	Pb 2ND LVL INTCT 260 °C e1

3 Overview of BIOS Features

What This Chapter Contains

3.1 Introduction 81
3.2 BIOS Flash Memory Organization 82
3.3 Resource Configuration 82
3.4 System Management BIOS (SMBIOS) 83
3.5 Legacy USB Support 83
3.6 BIOS Updates 84
3.7 Boot Options 85
3.8 Adjusting Boot Speed 86
3.9 BIOS Security Features 87

3.1 Introduction

The boards use an Intel BIOS that is stored in the Serial Peripheral Interface Flash Memory (SPI Flash) and can be updated using a disk-based program. The SPI Flash contains the BIOS Setup program, POST, the PCI auto-configuration utility, and Plug and Play support.

The BIOS displays a message during POST identifying the type of BIOS and a revision code. The initial production BIOSs are identified as NT94510J.86A.

When the BIOS Setup configuration jumper is set to configure mode and the computer is powered-up, the BIOS compares the CPU version and the microcode version in the BIOS and reports if the two match.

The BIOS Setup program can be used to view and change the BIOS settings for the computer. The BIOS Setup program is accessed by pressing the <F2> key after the Power-On Self-Test (POST) memory test begins and before the operating system boot begins. The menu bar is shown below.

Maintenance	**Main**	**Advanced**	**Security**	**Power**	**Boot**	**Exit**

NOTE

The maintenance menu is displayed only when the Desktop Board is in configure mode. Section 2.9 on page 67 shows how to put the Desktop Board in configure mode.

Table 40 lists the BIOS Setup program menu features.

Table 40. BIOS Setup Program Menu Bar

Maintenance	Main	Advanced	Security	Power	Boot	Exit
Clears passwords and displays processor information	Displays processor and memory configuration	Configures advanced features available through the chipset	Sets passwords and security features	Configures power management features and power supply controls	Selects boot options	Saves or discards changes to Setup program options

Table 41 lists the function keys available for menu screens.

Table 41. BIOS Setup Program Function Keys

BIOS Setup Program Function Key	Description
<←> or <→>	Selects a different menu screen (Moves the cursor left or right)
<↑> or <↓>	Selects an item (Moves the cursor up or down)
<Tab>	Selects a field (Not implemented)
<Enter>	Executes command or selects the submenu
<F9>	Load the default configuration values for the current menu
<F10>	Save the current values and exits the BIOS Setup program
<Esc>	Exits the menu

3.2 BIOS Flash Memory Organization

The Serial Peripheral Interface Flash Memory (SPI Flash) includes a 4 Mbit (512 KB) flash memory device.

3.3 Resource Configuration

3.3.1 PCI Autoconfiguration

The BIOS can automatically configure PCI devices. PCI devices may be onboard or add-in cards. Autoconfiguration lets a user insert or remove PCI cards without having to configure the system. When a user turns on the system after adding a PCI card, the BIOS automatically configures interrupts, the I/O space, and other system resources. Any interrupts set to Available in Setup are considered to be available for use by the add-in card.

3.3.2 PCI IDE Support

If you select Auto in the BIOS Setup program, the BIOS automatically sets up the PCI IDE connector with independent I/O channel support. The IDE interface supports hard drives up to ATA-66/100 and recognizes any ATAPI compliant devices, including CD-ROM drives, tape drives, and Ultra DMA drives. The interface also supports second-generation SATA drives. The BIOS determines the capabilities of each drive and configures them to optimize capacity and performance. To take advantage of the high capacities typically available today, hard drives are

automatically configured for Logical Block Addressing (LBA) and to PIO Mode 3 or 4, depending on the capability of the drive. You can override the auto-configuration options by specifying manual configuration in the BIOS Setup program.

To use ATA-66/100 features the following items are required:

- An ATA-66/100 peripheral device
- An ATA-66/100 compatible cable
- ATA-66/100 operating system device drivers

NOTE

Do not connect an ATA device as a slave on the same IDE cable as an ATAPI master device. For example, do not connect an ATA hard drive as a slave to an ATAPI CD-ROM drive.

3.4 System Management BIOS (SMBIOS)

SMBIOS is a Desktop Management Interface (DMI) compliant method for managing computers in a managed network.

The main component of SMBIOS is the Management Information Format (MIF) database, which contains information about the computing system and its components. Using SMBIOS, a system administrator can obtain the system types, capabilities, operational status, and installation dates for system components. The MIF database defines the data and provides the method for accessing this information. The BIOS enables applications such as third-party management software to use SMBIOS. The BIOS stores and reports the following SMBIOS information:

- BIOS data, such as the BIOS revision level
- Fixed-system data, such as peripherals, serial numbers, and asset tags
- Resource data, such as memory size, cache size, and processor speed
- Dynamic data, such as event detection and error logging

Non-Plug and Play operating systems, such as Windows NT*, require an additional interface for obtaining the SMBIOS information. The BIOS supports an SMBIOS table interface for such operating systems. Using this support, an SMBIOS service-level application running on a non-Plug and Play operating system can obtain the SMBIOS information.

3.5 Legacy USB Support

Legacy USB support enables USB devices to be used even when the operating system's USB drivers are not yet available. Legacy USB support is used to access the BIOS Setup program, and to install an operating system that supports USB.

Legacy USB support operates as follows:

1. When you apply power to the computer, legacy support is disabled.
2. POST begins.
3. Legacy USB support is enabled by the BIOS allowing you to use a USB keyboard to enter and configure the BIOS Setup program and the maintenance menu.
4. POST completes.

5. The operating system loads. While the operating system is loading, USB keyboards and mice are recognized and may be used to configure the operating system.
6. After the operating system loads the USB drivers, all legacy and non-legacy USB devices are recognized by the operating system, and Legacy USB support from the BIOS is no longer used.

To install an operating system that supports USB, follow the operating system's installation instructions.

3.6 BIOS Updates

The BIOS can be updated using either of the following utilities, which are available on the Intel World Wide Web site:

- Intel® Express BIOS Update utility, which enables automated updating while in the Windows environment. Using this utility, the BIOS can be updated from a file on a hard disk, a 1.44 MB diskette, or a CD-ROM, or from the file location on the Web.
- Intel® Flash Memory Update Utility, which requires creation of a boot diskette and manual rebooting of the system. Using this utility, the BIOS can be updated from a file on a 1.44 MB diskette (from a legacy diskette drive or an LS-120 diskette drive) or a CD-ROM.

Both utilities verify that the updated BIOS matches the target system to prevent accidentally installing an incompatible BIOS.

NOTE

Review the instructions distributed with the upgrade utility before attempting a BIOS update.

For information about	Refer to
The Intel World Wide Web site	Section 1.2, page 15

3.6.1 Language Support

The BIOS Setup program and help messages are supported in US English. Additional languages are available in the Integrator's Toolkit utility. Check the Intel website for details.

3.6.2 Custom Splash Screen

During POST, an Intel® splash screen is displayed by default. This splash screen can be augmented with a custom splash screen. The Integrator's Toolkit that is available from Intel can be used to create a custom splash screen.

NOTE

If you add a custom splash screen, it will share space with the Intel branded logo.

For information about	Refer to
The Intel World Wide Web site	Section 1.2, page 15

3.7 Boot Options

In the BIOS Setup program, the user can choose to boot from a diskette drive, hard drives, CD-ROM, or the network. The default setting is for the diskette drive to be the first boot device, the hard drive second, and the ATAPI CD-ROM third. The fourth device is disabled.

3.7.1 CD-ROM Boot

Booting from CD-ROM is supported in compliance to the El Torito bootable CD-ROM format specification. Under the Boot menu in the BIOS Setup program, ATAPI CD-ROM is listed as a boot device. Boot devices are defined in priority order. Accordingly, if there is not a bootable CD in the CD-ROM drive, the system will attempt to boot from the next defined drive.

3.7.2 Network Boot

The network can be selected as a boot device. This selection allows booting from the onboard LAN or a network add-in card with a remote boot ROM installed.

Pressing the <F12> key during POST automatically forces booting from the LAN. To use this key during POST, the User Access Level in the BIOS Setup program's Security menu must be set to Full.

3.7.3 Booting Without Attached Devices

For use in embedded applications, the BIOS has been designed so that after passing the POST, the operating system loader is invoked even if the following devices are not present:

- Video adapter
- Keyboard
- Mouse

3.7.4 Changing the Default Boot Device During POST

Pressing the <F10> key during POST causes a boot device menu to be displayed. This menu displays the list of available boot devices (as set in the BIOS setup program’s Boot Device Priority Submenu). Table 42 lists the boot device menu options.

Table 42. Boot Device Menu Options

Boot Device Menu Function Keys	Description
<↑> or <↓>	Selects a default boot device
<Enter>	Exits the menu, saves changes, and boots from the selected device
<Esc>	Exits the menu without saving changes

3.8 Adjusting Boot Speed

These factors affect system boot speed:

- Selecting and configuring peripherals properly
- Optimized BIOS boot parameters

3.8.1 Peripheral Selection and Configuration

The following techniques help improve system boot speed:

- Choose a hard drive with parameters such as “power-up to data ready” less than eight seconds, that minimize hard drive startup delays.
- Select a CD-ROM drive with a fast initialization rate. This rate can influence POST execution time.
- Eliminate unnecessary add-in adapter features, such as logo displays, screen repaints, or mode changes in POST. These features may add time to the boot process.
- Try different monitors. Some monitors initialize and communicate with the BIOS more quickly, which enables the system to boot more quickly.

3.8.2 BIOS Boot Optimizations

Use of the following BIOS Setup program settings reduces the POST execution time.

In the Boot Menu:

- Set the hard disk drive as the first boot device. As a result, the POST does not first seek a diskette drive, which saves about one second from the POST execution time.
- Disable Quiet Boot, which eliminates display of the logo splash screen. This could save several seconds of painting complex graphic images and changing video modes.

In the Peripheral Configuration submenu, disable the LAN device if it will not be used. This can reduce up to four seconds of option ROM boot time.

NOTE

It is possible to optimize the boot process to the point where the system boots so quickly that the Intel logo screen (or a custom logo splash screen) will not be seen. Monitors and hard disk drives with minimum initialization times can also contribute to a boot time that might be so fast that necessary logo screens and POST messages cannot be seen.

This boot time may be so fast that some drives might be not be initialized at all. If this condition should occur, it is possible to introduce a programmable delay ranging from three to 30 seconds (using the Hard Disk Pre-Delay feature of the Advanced Menu in the Drive Configuration Submenu of the BIOS Setup program).

3.9 BIOS Security Features

The BIOS includes security features that restrict access to the BIOS Setup program and who can boot the computer. A supervisor password and a user password can be set for the BIOS Setup program and for booting the computer, with the following restrictions:

- The supervisor password gives unrestricted access to view and change all the Setup options in the BIOS Setup program. This is the supervisor mode.
- The user password gives restricted access to view and change Setup options in the BIOS Setup program. This is the user mode.
- If only the supervisor password is set, pressing the <Enter> key at the password prompt of the BIOS Setup program allows the user restricted access to Setup.
- If both the supervisor and user passwords are set, users can enter either the supervisor password or the user password to access Setup. Users have access to Setup respective to which password is entered.
- Setting the user password restricts who can boot the computer. The password prompt will be displayed before the computer is booted. If only the supervisor password is set, the computer boots without asking for a password. If both passwords are set, the user can enter either password to boot the computer.
- For enhanced security, use different passwords for the supervisor and user passwords.
- Valid password characters are A-Z, a-z, and 0-9. Passwords may be up to 16 characters in length.

Table 43 shows the effects of setting the supervisor password and user password. This table is for reference only and is not displayed on the screen.

Table 43. Supervisor and User Password Functions

Password Set	Supervisor Mode	User Mode	Setup Options	Password to Enter Setup	Password During Boot
Neither	Can change all options (Note)	Can change all options (Note)	None	None	None
Supervisor only	Can change all options	Can change a limited number of options	Supervisor Password	Supervisor	None
User only	N/A	Can change all options	Enter Password Clear User Password	User	User
Supervisor and user set	Can change all options	Can change a limited number of options	Supervisor Password Enter Password	Supervisor or user	Supervisor or user

Note: If no password is set, any user can change all Setup options.

4 Error Messages and Beep Codes

What This Chapter Contains

4.1 Speaker 89
4.2 BIOS Beep Codes 89
4.3 BIOS Error Messages 89
4.4 Port 80h POST Codes 90

4.1 Speaker

The board-mounted speaker provides audible error code (beep code) information during POST.

For information about	Refer to
The location of the onboard speaker	Figure 1, page 12

4.2 BIOS Beep Codes

Whenever a recoverable error occurs during POST, the BIOS displays an error message describing the problem (see Table 44).

Table 44. Beep Codes

Type	Pattern	Frequency
Memory error	Three long beeps	1280 Hz
Thermal warning	Four alternating beeps: High tone, low tone, high tone, low tone	High tone: 2000 Hz Low tone: 1600 Hz

4.3 BIOS Error Messages

Table 45 lists the error messages and provides a brief description of each.

Table 45. BIOS Error Messages

Error Message	Explanation
CMOS Battery Low	The battery may be losing power. Replace the battery soon.
CMOS Checksum Bad	The CMOS checksum is incorrect. CMOS memory may have been corrupted. Run Setup to reset values.
Memory Size Decreased	Memory size has decreased since the last boot. If no memory was removed then memory may be bad.
No Boot Device Available	System did not find a device to boot.

4.4 Port 80h POST Codes

During the POST, the BIOS generates diagnostic progress codes (POST-codes) to I/O port 80h. If the POST fails, execution stops and the last POST code generated is left at port 80h. This code is useful for determining the point where an error occurred.

Displaying the POST-codes requires a PCI bus add-in card, often called a POST card. The POST card can decode the port and display the contents on a medium such as a seven-segment display.

NOTE

The POST card must be installed in PCI bus connector 1.

The following tables provide information about the POST codes generated by the BIOS:

- Table 46 lists the Port 80h POST code ranges
- Table 47 lists the Port 80h POST codes themselves
- Table 48 lists the Port 80h POST sequence

NOTE

In the tables listed above, all POST codes and range values are listed in hexadecimal.

Table 46. Port 80h POST Code Ranges

Range	Category/Subsystem
00 – 0F	Debug codes: Can be used by any PEIM/driver for debug.
10 – 1F	Host Processors: 1F is an unrecoverable CPU error.
20 – 2F	Memory/Chipset: 2F is no memory detected or no useful memory detected.
30 – 3F	Recovery: 3F indicated recovery failure.
40 – 4F	Reserved for future use.
50 – 5F	I/O Busses: PCI, USB, ISA, ATA, etc. 5F is an unrecoverable error. Start with PCI.
60 – 6F	Reserved for future use (for new busses).
70 – 7F	Output Devices: All output consoles. 7F is an unrecoverable error.
80 – 8F	Reserved for future use (new output console codes).
90 – 9F	Input devices: Keyboard/Mouse. 9F is an unrecoverable error.
A0 – AF	Reserved for future use (new input console codes).
B0 – BF	Boot Devices: Includes fixed media and removable media. BF is an unrecoverable error.
C0 – CF	Reserved for future use.
D0 – DF	Boot device selection.
E0 – FF	F0 – FF: FF processor exception. E0 – EE: Miscellaneous codes. See Table 47. EF boot/S3: resume failure.

Table 47. Port 80h POST Codes

POST Code	Description of POST Operation
	Host Processor
10	Power-on initialization of the host processor (Boot Strap Processor)
11	Host processor Cache initialization (including APs)
12	Starting Application processor initialization
13	SMM initialization
	Chipset
21	Initializing a chipset component
	Memory
22	Reading SPD from memory DIMMs
23	Detecting presence of memory DIMMs
24	Programming timing parameters in the memory controller and the DIMMs
25	Configuring memory
26	Optimizing memory settings
27	Initializing memory, such as ECC init
28	Testing memory
	PCI Bus
50	Enumerating PCI busses
51	Allocating resources to PCI bus
52	Hot Plug PCI controller initialization
53 – 57	Reserved for PCI Bus
	USB
58	Resetting USB bus
59	Reserved for USB
	ATA/ATAPI/SATA
5A	Resetting PATA/SATA bus and all devices
5B	Reserved for ATA
	SMBus
5C	Resetting SMBUS
5D	Reserved for SMBUS
	Local Console
70	Resetting the VGA controller
71	Disabling the VGA controller
72	Enabling the VGA controller
	Remote Console
78	Resetting the console controller
79	Disabling the console controller
7A	Enabling the console controller

continued

Table 47. Port 80h POST Codes (continued)

POST Code	Description of POST Operation
	Keyboard (PS2 or USB)
90	Resetting keyboard
91	Disabling keyboard
92	Detecting presence of keyboard
93	Enabling keyboard
94	Clearing keyboard input buffer
95	Instructing keyboard controller to run Self Test (PS2 only)
	Mouse (PS2 or USB)
98	Resetting mouse
99	Disabling mouse
9A	Detecting presence of mouse
9B	Enabling mouse
	Fixed Media
B0	Resetting fixed media
B1	Disabling fixed media
B2	Detecting presence of a fixed media (IDE hard drive detection etc.)
B3	Enabling/configuring a fixed media
	Removable media
B8	Resetting removable media
B9	Disabling removable media
BA	Detecting presence of a removable media (IDE, CD-ROM detection, etc.)
BC	Enabling/configuring a removable media
	BDS
D*y*	Trying boot selection y (y=0 to 15)
	PEI Core
E0	Started dispatching PEIMs (emitted on first report of EFI_SW_PC_INIT_BEGIN EFI_SW_PEI_PC_HANDOFF_TO_NEXT
E2	Permanent memory found.
E1, E3	Reserved for PEI/PEIMs
	DXE Core
E4	Entered DXE phase
E5	Started dispatching drivers
E6	Started connecting drivers

continued

Table 47. Port 80h POST Codes (continued)

POST Code	Description of POST Operation
	DXE Drivers
E7	Waiting for user input
E8	Checking password
E9	Entering BIOS setup
EA	TBD – Flash Update
EB	Calling Legacy Option ROMs
EE	TBD – Calling INT 19. One beep unless silent boot is enabled.
EF	TBD – Unrecoverable Boot failure/S3 resume failure
	Runtime Phase/EFI OS Boot
F4	Entering Sleep state
F5	Exiting Sleep state
F8	EFI boot service ExitBootServices ( ) has been called
F9	EFI runtime service SetVirtualAddressMap ( ) has been called
FA	EFI runtime service ResetSystem ( ) has been called
	PEIMs/Recovery
30	Crisis Recovery has initiated per User request
31	Crisis Recovery has initiated by software (corrupt flash)
34	Loading recovery capsule
35	Handing off control to the recovery capsule
3F	Unable to recover

Table 48. Typical Port 80h POST Sequence

POST Code	Description
21	Initializing a chipset component
22	Reading SPD from memory DIMMs
23	Detecting presence of memory DIMMs
25	Configuring memory
28	Testing memory
34	Loading recovery capsule
E4	Entered DXE phase
12	Starting Application processor initialization
13	SMM initialization
50	Enumerating PCI busses
51	Allocating resourced to PCI bus
92	Detecting the presence of the keyboard
90	Resetting keyboard
94	Clearing keyboard input buffer
95	Keyboard Self Test
EB	Calling Video BIOS
58	Resetting USB bus
5A	Resetting PATA/SATA bus and all devices
92	Detecting the presence of the keyboard
90	Resetting keyboard
94	Clearing keyboard input buffer
5A	Resetting PATA/SATA bus and all devices
28	Testing memory
90	Resetting keyboard
94	Clearing keyboard input buffer
E7	Waiting for user input
01	INT 19
00	Ready to boot.