SMT Power Inductors - DO3316H Series

- Soldered self-leaded construction for excellent solderability.
- Very low DCR values and excellent current handling

Designer's Kit C326 contains 3 of each part

Core material Ferrite

Core and winding loss See www.coilcraft.com/coreloss

Terminations RoHS compliant tin-silver-copper over copper. Other terminations available at additional cost.

Weight 0.95 – 1.25 g

Ambient temperature –40°C to +85°C with Irms current, +85°C to +125°C with derated current

Storage temperature Component: –40°C to +125°C. Packaging: –40°C to +80°C

Resistance to soldering heat Max three 40 second reflows at +260°C, parts cooled to room temperature between cycles

Moisture Sensitivity Level (MSL) 1 (unlimited floor life at <30°C / 85% relative humidity)

Failures in Time (FIT) / Mean Time Between Failures (MTBF) 38 per billion hours / 26,315,789 hours, calculated per Telcordia SR-332

Packaging 750 per 13″ reel Plastic tape: 24 mm wide, 0.35 mm thick, 12 mm pocket spacing, 6.4 mm pocket depth

PCB washing Only pure water or alcohol recommended

Part number[1]	L ±20%[2] (µH)	DCR max (Ohms)	SRF[3] typ (MHz)	Isat[4] (A)	Irms[5] (A)
DO3316H-121ML_	0.12	0.0015	200	28	17
DO3316H-331ML_	0.33	0.002	200	20	16
DO3316H-681ML_	0.68	0.005	200	13	12
DO3316H-102ML_	1.0	0.006	100	11	10
DO3316H-152ML_	1.5	0.008	90	9.0	9.0
DO3316H-222ML_	2.2	0.011	80	7.8	7.4
DO3316H-272ML_	2.7	0.012	65	7.0	6.6
DO3316H-332ML_	3.3	0.014	60	6.4	5.9
DO3316H-392ML_	3.9	0.015	50	5.9	5.3
DO3316H-472ML_	4.7	0.018	45	5.4	4.8

1. When ordering, please specify **termination** and **packaging** codes:

DO3316H-472M L D

Termination: **L** = RoHS compliant tin-silver over copper. **Special order: T** = RoHS tin-silver-copper (95.5/4/0.5) or **S** = non-RoHS tin-lead (63/37).

Packaging: **D** = 13″ machine-ready reel. EIA-481 embossed plastic tape, 750 parts per full reel.

B = Less than full reel. In tape, but not machine-ready. To have a leader and trailer added ($25 charge), use code letter D instead.

2. Inductance tested at 100 kHz, 0.1 Vrms, 0 Adc using an Agilent/HP 4263B LCR meter or equivalent.
3. SRF measured using Agilent/HP 8753D network analyzer.
4. DC current at which the inductance drops 10% (typ) from its value without current.
5. Current that causes a 40°C temperature rise from 25°C ambient.
6. Electrical specifications at 25°C.

Refer to Doc 362 "Soldering Surface Mount Components" before soldering.

SPICE models
ON OUR WEB SITE OR CD

1102 Silver Lake Road Cary, Illinois 60013 **Phone** 847/639-6400 **Fax** 847/639-1469
E-mail info@coilcraft.com **Web** http://www.coilcraft.com

© Coilcraft, Inc. 2009

SMT Power Inductors - DO3316H Series

Typical L vs Frequency

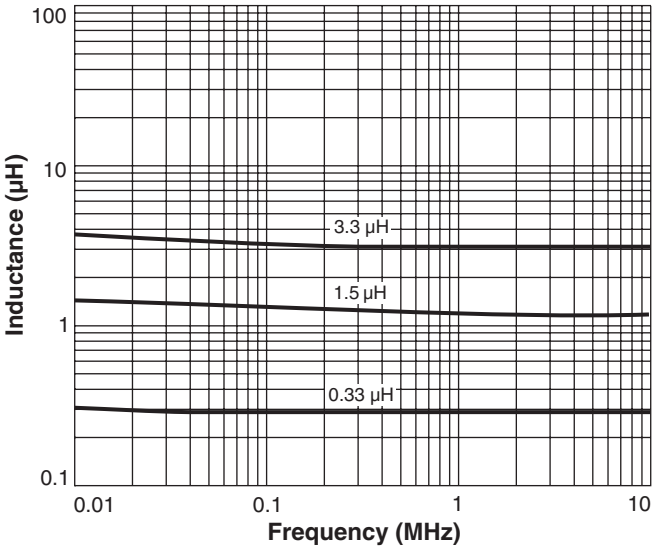

Typical L vs Current

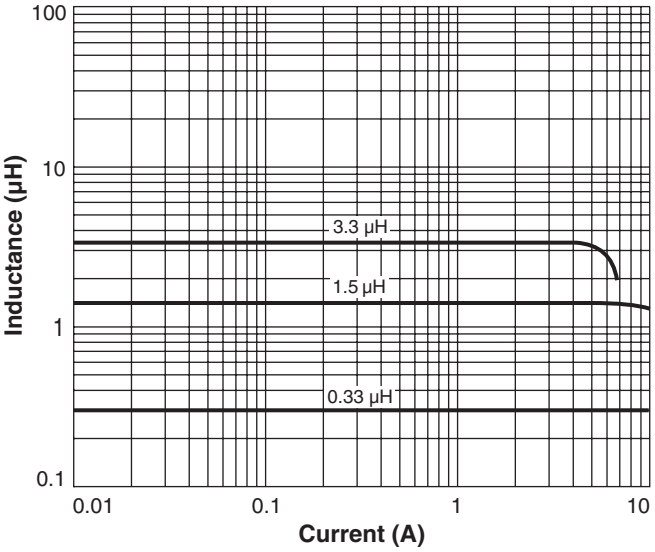

Irms Derating

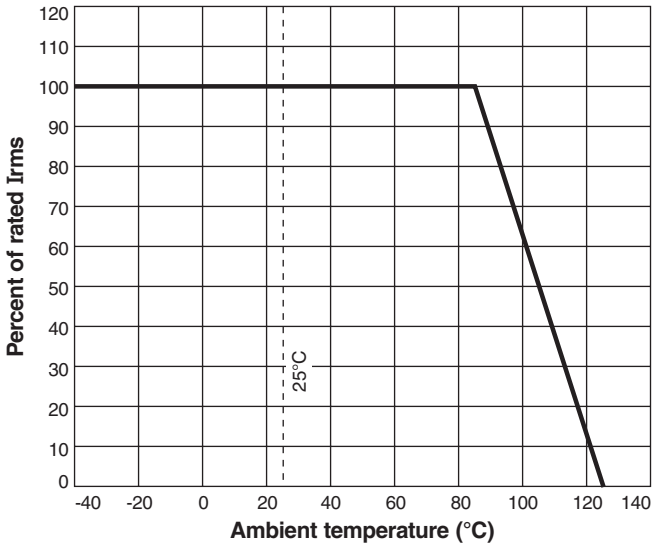

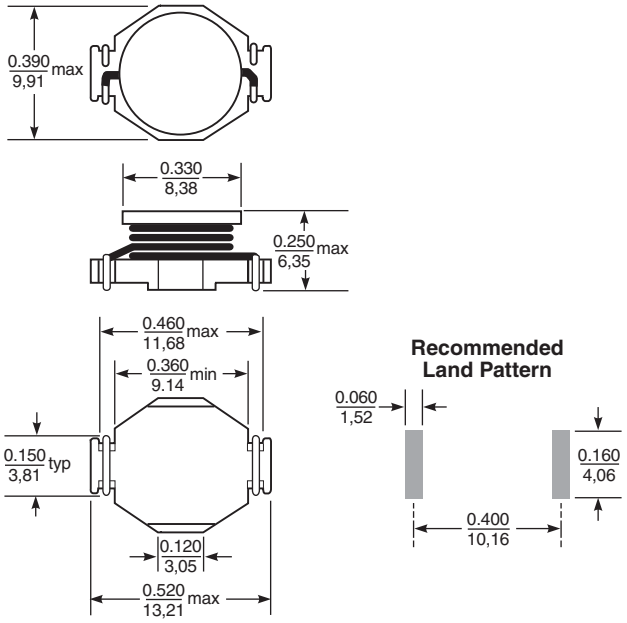

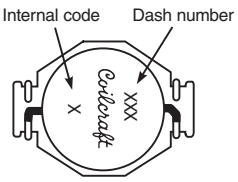

Part marking since Feb. 2005. Parts manufactured prior to that date may have color dots.
Visit www.coilcraft.com/colrpowr.cfm for details.

Dimensions are in inches / mm

1102 Silver Lake Road Cary, Illinois 60013 **Phone** 847/639-6400 **Fax** 847/639-1469
E-mail info@coilcraft.com **Web** http://www.coilcraft.com

© Coilcraft, Inc. 2009