- Low Profile
- 3.2 x 1.5 mm Footprint
- Extended Temp. Range
- RoHS Compliant

ECX-31B

SMD TUNING FORK CRYSTAL

The ultra-miniature ECX-31B is a very compact SMD Tuning Fork Crystal. The 3.2 x 1.5 x 0.9 mm ceramic package is ideal for today's SMD manufacturing environment.

OPERATING CONDITIONS / ELECTRICAL CHARACTERISTICS

PARAMETERS	CONDITIONS	ECX-31B			UNITS
		MIN	TYP	MAX	
Frequency	F_O		32.768		KHz
Frequency Tolerance	@ +25°C			± 20	ppm
Load Capacitance	Specify in P/N		12.5		pF
Drive Level	D_L		0.1	1.0	µW
Equivalent Series Resistance	R_1			70K	Ω
Turnover Temperature		+20	+25	+30	°C
Temperature Coefficient		-0.028	-0.034	-0.040	ppm/°C²
Shunt Capacitance	C_o		1.05		pF
First Year Aging	+25°C ±3°C			± 3	ppm
Operating Temperature	T_{opr}	-40		+85	°C
Storage Temperature	Tstg	-55		+125	°C
Insulation Resistance	@ 100V DC	500M			Ω

TOP, BOTTOM, SIDE VIEWS & LAND PATTERN

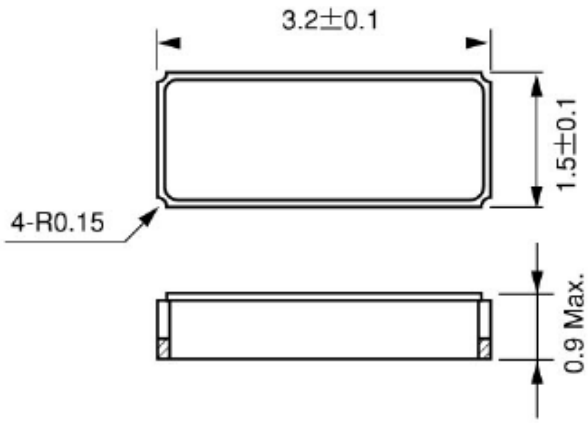

Figure 1) Top and Side View

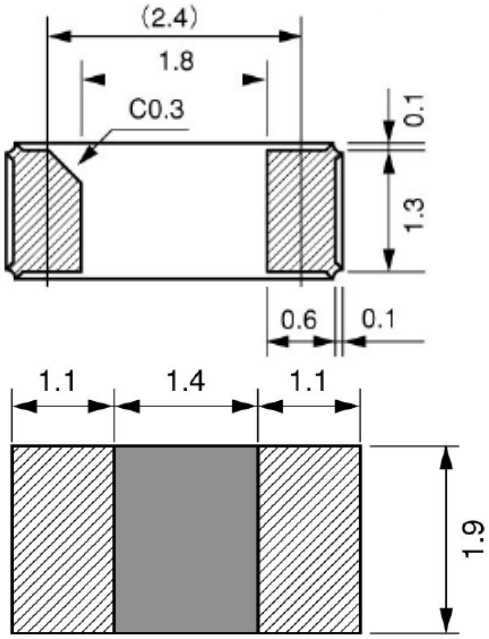

Figure 2) Bottom View and Suggested Land

PART NUMBERING GUIDE: Example ECS-.327-12.5-34B-TR

ECS -	Frequency Abbreviation -	Load Capacitance -	Package Type -	Packaging
	.327 = 32.768 KHz	12.5 = 12.5 pF 9 = 9 pF 7 = 7 pF	-34B = ECX-31B	-TR = Tape & Reel 3K/Reel

1105 South Ridgeview Road • Olathe, KS 66062 • Phone: 913.782.7787 • Fax: 913.782.6991 • www.ecsxtal.com