Dual USB / Gigabit Filter Port Jacks

EPJ4019

- Space saving RJ-45/USB Connectors
- Thermo Plastic PBT UL94V-0 Rated Connector Housing
- Metal Shield : Nickel Plated Copper Alloy
- Pins : 0.018 Tin-Coated Copper Wire

Electrical Parameters @ 25° C

OCL (μH Min.)	Insertion Loss (dB Max.)	Return Loss (dB Min.)			CMRR (dB Min.)	CMD (dB Min.)	Turns Ratio (± 5%)	Crosstalk (dB Min.)
@ 100 KHz, 100m Vrms	1-100 MHz	1-30 MHz	@ 60 MHz	@80 MHz	100 KHz-100 MHz	100 KHz-100 MHz		1-100 MHz
8 mA DC Bias								Xmit - Rcv
350	-1	-20	-18	-12	-30	-30	1CT:1CT	-30

- **LEDs :** Vf=2.1V Typ. @ 20 mA • **Isolation :** 1500 Vrms • **Operating Temperature :** 0°C to +70°C •

Schematic

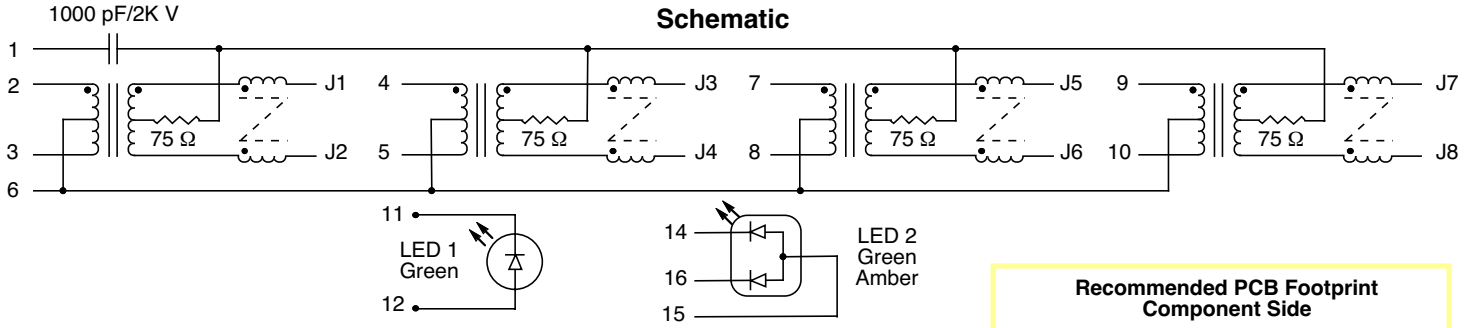

Package

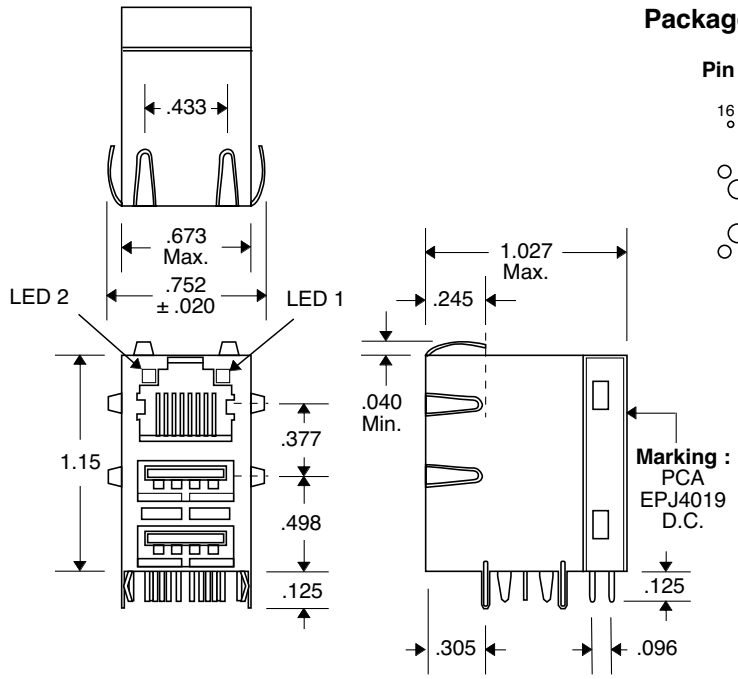

Pin Assignment

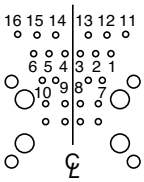

Recommended PCB Footprint Component Side

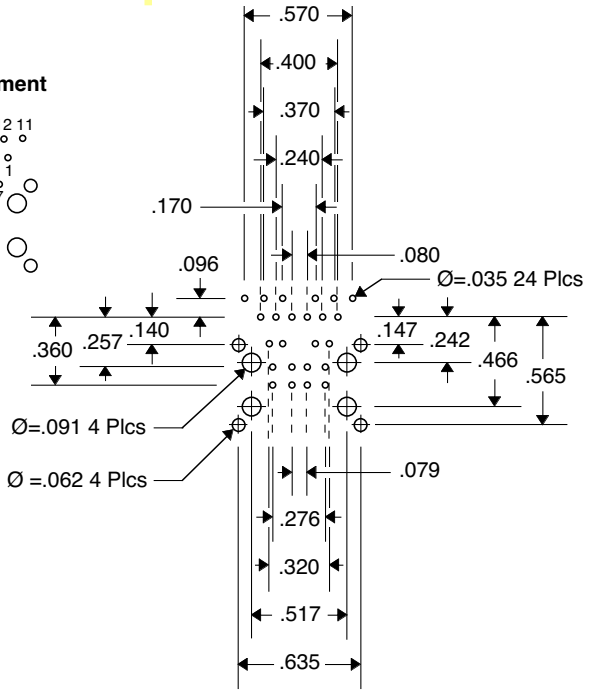

PCA ELECTRONICS, INC.
16799 SCHOENBORN ST.
NORTH HILLS, CA 91343

Product performance is limited to specified parameters. Data is subject to change without prior notice.

TEL: (818) 892-0761
FAX: (818) 894-5791
http://www.pca.com