Rating	0.5A 125V AC
Contact Resistance	50m ohm max.
Insulation Resistance	DC 500V 100M ohm min.
Dielectric Strength	AC 1500V 1 minute

Mounting Hole

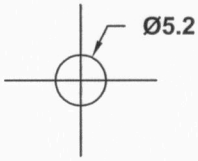

Cut-Out 4 mm thk. max.

Circuit Diagram

SPST OFF - (ON)

( )= Momentary

BASE COLOR: Nickel Plated Brass

BUTTON COLOR: Black

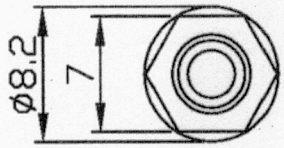

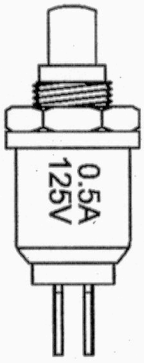

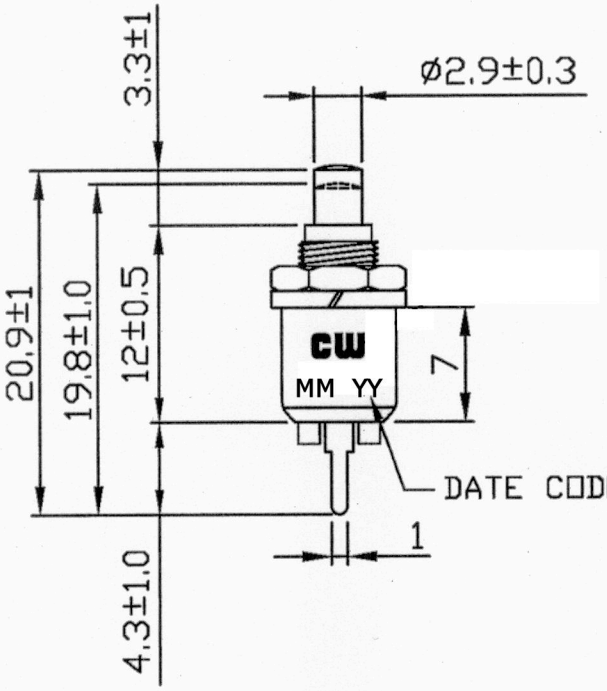

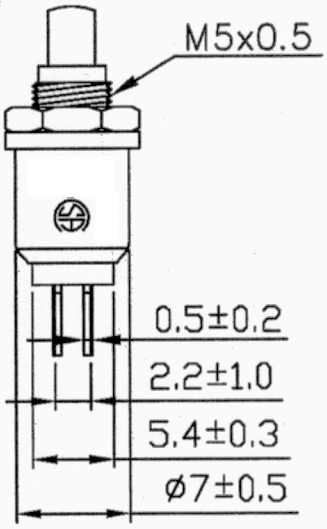

RoHS Compliant

THIS INFORMATION IS CONFIDENTIAL AND PROPRIETARY TO CW INDUSTRIES INCORPORATED AND ITS AFFILIATES. IT MAY NOT BE DISCLOSED TO ANYONE, OTHER THAN CW INDUSTRIES PERSONNEL, WITHOUT WRITTEN AUTHORIZATION FROM CW INDUSTRIES INCORPORATED, SOUTHAMPTON, PENNSYLVANIA USA.

CW INDUSTRIES
Southampton, Pa. 18966
Tel 215.355.7080/www.cwind.com

Date Drawn: 12/25/09	Rev. 0	Unit: mm	Checked By: G. Guld
Title: PUSH BUTTON SWITCH			CW P/N: GPB081A09B