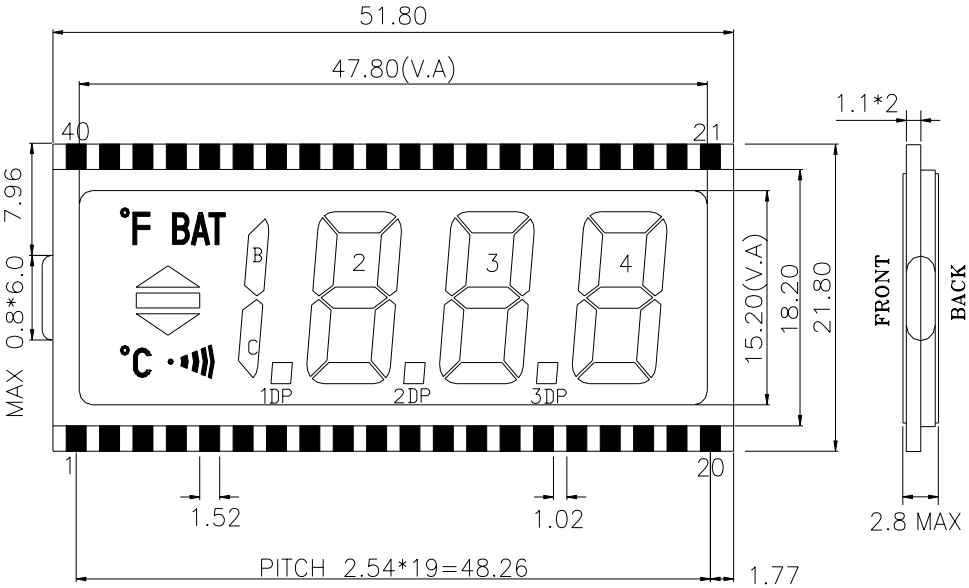

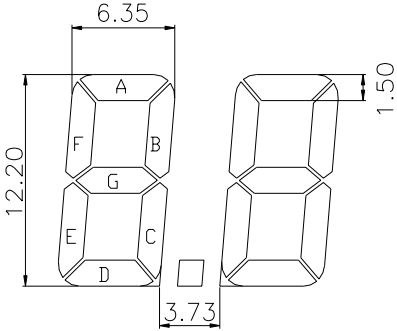

PIN	COM	PIN	COM	PIN	COM	PIN	COM
1	COM	12	2DP	23	4G	34	
2	°C	13	3E	24	3B	35	
3		14	3D	25	3A	36	
4		15	3C	26	3F	37	△
5	B−C	16	3DP	27	3G	38	BAT
6		17	4E	28		39	▽
7		18	4D	29	2B	40	°F
8	1DP	19	4C	30	2A		
9	2E	20	4B	31	2F		
10	2D	21	4A	32	2G		
11	2C	22	4F	33			

NOTES:

1: TOLERANCES UNLESS OTHERWISE SPECIFIED: ±0.20
2: VIEWING ANGLE: 6 O'CLOCK
3: POLARIZER: REFLECTIVE
4: DUTY: STATIC
5: DRIVING VOLTAGE: 5V
6: OPERATING TEMPERATURE: 0°C TO 55°C
7: STORAGE TEMPERATURE: −20°C TO 65°C

AZ Displays, Inc.		
DRAWN BY: W.L.L	TITLE:	SCALE: 3:1
CHECKED BY: H.L.P	3.5 Digit	UNIT: mm
Part No. GD− 028		SIZE: A4
DATE: 94,3,29	SHEET 1 OF 1	