STL72

MEDIUM VOLTAGE FAST-SWITCHING NPN POWER TRANSISTOR

- MEDIUM VOLTAGE CAPABILITY
- LOW SPREAD OF DYNAMIC PARAMETERS
- MINIMUM LOT-TO-LOT SPREAD FOR RELIABLE OPERATION
- VERY HIGH SWITCHING SPEED

APPLICATIONS

- ELECTRONIC BALLASTS FOR FLUORESCENT LIGHTING

DESCRIPTION

The device is manufactured using high voltage Multi-Epitaxial Planar technology for high switching speeds and medium voltage capability.

It uses a Cellular Emitter structure with planar edge termination to enhance switching speeds while maintaining the wide RBSOA.

The STL series is designed for use in Compact Fluorescent Lamps.

Figure 1: Package

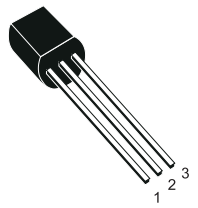

TO-92

Figure 2: Internal Schematic Diagram

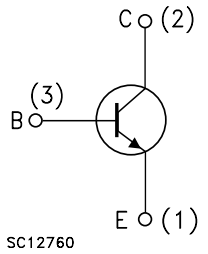

Table 1: Order Codes

Part Number	Marking	Package	Packaging
STL72	L72 L or (#) L72 H	TO-92	Bulk

See:note on page 2

Table 2: Absolute Maximum Ratings

Symbol	Parameter	Value	Unit
V_{CES}	Collector-Emitter Voltage (V_{BE} = 0)	700	V
V_{CEO}	Collector-Emitter Voltage (I_B = 0)	400	V
V_{EBO}	Emitter-Base Voltage (I_C = 0)	9	V
I_C	Collector Current	1	A
I_{CM}	Collector Peak Current (t_p < 5ms)	2	A
I_B	Base Current	0.5	A
I_{BM}	Base Peak Current (t_p < 5ms)	1	A
P_{tot}	Total Dissipation at T_C = 25 ^oC	1	W
T_{stg}	Storage Temperature	-65 to 150	°C
T_J	Max. Operating Junction Temperature	150	°C

Table 3: Thermal Data

$R_{thj-amb}$	Thermal Resistance Junction-Ambient	Max	120	$^oC/W$

Table 4: Electrical Characteristics (T_{case} = 25 ^oC unless otherwise specified)

Symbol	Parameter	Test Conditions		Min.	Typ.	Max.	Unit
I_{CEV}	Collector Cut-off Current (V_{BE} = -1.5 V)	V_{CE} = 700 V				1	mA
		V_{CE} = 700 V	T_j = 125 ^oC			5	mA
I_{EBO}	Emitter-Cut-off Current (I_C = 0)	V_{EB} = 9 V				1	mA
$V_{CEO(sus)}$*	Collector-Emitter Sustaining Voltage (I_B = 0)	I_C = 1 mA	L = 25 mH	400			V
$V_{CE(sat)}$*	Collector-Emitter Saturation Voltage	I_C = 0.2 A	I_B = 40 mA		0.15	0.4	V
		I_C = 0.4 A	I_B = 80 mA		0.25	0.5	V
$V_{BE(sat)}$*	Base-Emitter Saturation Voltage	I_C = 0.4 A	I_B = 80 mA		0.95	1.1	V
h_{FE}	DC Current Gain #	I_C = 0.4 A	V_{CE} = 5 V				
		Group L		10		16	
		Group H		15		23	
		I_C = 1 A	V_{CE} = 10 V	5		15	
t_f	INDUCTIVE LOAD Fall Time	I_C = 0.25	V_{Clamp} = 300 V		0.3		µs
		I_{B1} = -I_{B2} = 50 mA	L = 3mH				
		(see figure 3)					

* Pulsed: Pulsed duration = 300 μs, duty cycle ≤ 1.5 %.
# The product is pre-selected in DC current gain (Group L and Group H). STMicroelectronics reserves the right to ship either groups according to production availability. Please contact your nearest STMicrolectronics sales office for delivery datails.

Figure 3: Inductive Load Switching Test Circuit

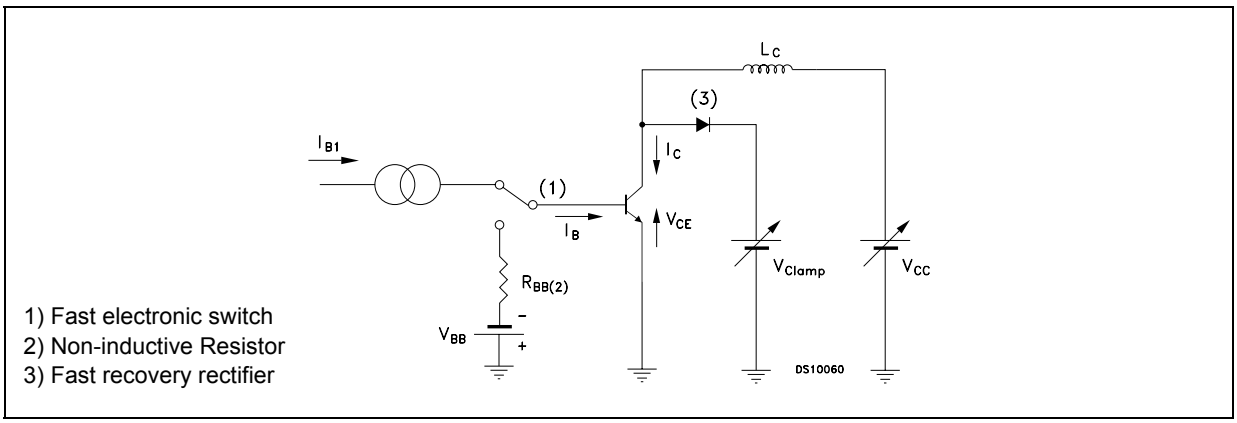

Figure 4: Restistive Load Switching Test Circuit

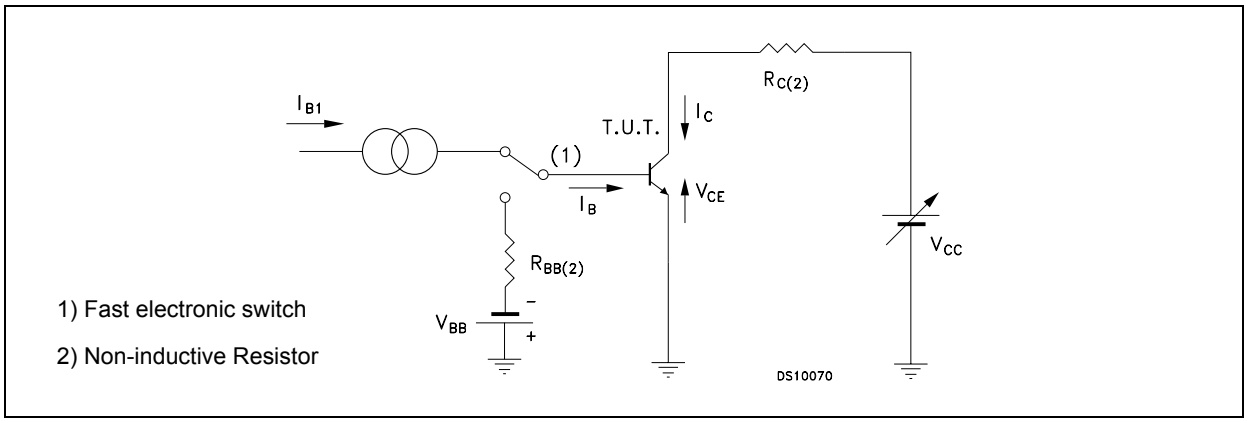

TO-92 BULK SHIPMENT MECHANICAL DATA

DIM.	mm.		
	MIN.	TYP	MAX.
A	4.32		4.95
b	0.36		0.51
D	4.45		4.95
E	3.30		3.94
e	2.41		2.67
e1	1.14		1.40
L	12.70		15.49
R	2.16		2.41
S1	0.92		1.52
W	0.41		0.56
V		5°	

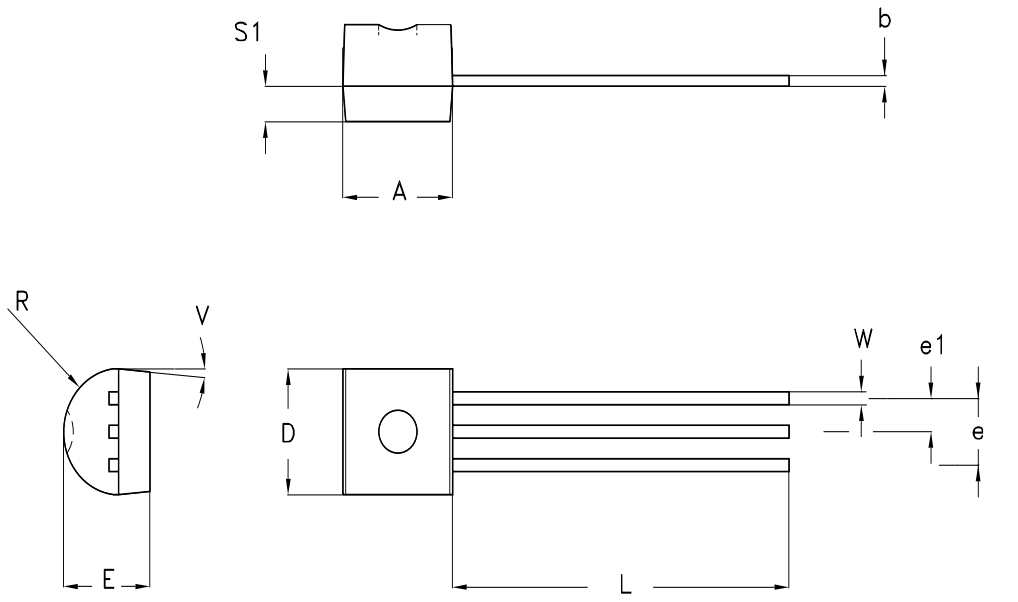

0102782 C

Figure 5: Revision History

Release Date	Version	Change Designator
01-Apr-2005	1	Initial release
12-Jul-2005	2	New hfe range values

Information furnished is believed to be accurate and reliable. However, STMicroelectronics assumes no responsibility for the consequences of use of such information nor for any infringement of patents or other rights of third parties which may result from its use. No license is granted by implication or otherwise under any patent or patent rights of STMicroelectronics. Specifications mentioned in this publication are subject to change without notice. This publication supersedes and replaces all information previously supplied. STMicroelectronics products are not authorized for use as critical components in life support devices or systems without express written approval of STMicroelectronics.

The ST logo is a registered trademark of STMicroelectronics

All other names are the property of their respective owners

© 2005 STMicroelectronics - All Rights Reserved

STMicroelectronics group of companies

Australia - Belgium - Brazil - Canada - China - Czech Republic - Finland - France - Germany - Hong Kong - India - Israel - Italy - Japan - Malaysia - Malta - Morocco - Singapore - Spain - Sweden - Switzerland - United Kingdom - United States of America

www.st.com