3528 Size Flash White Color SMD Type LED

Part Number : S3528WH-EA

2004. 12. 7

	Composition	Check	Approval
NiNEX			
	/	/	/
	/	/	/

NiNEX Co., Ltd.

http://www.ninex.biz

Head Quarter/ Factory:

#449-12, Mogok-Dong, PyongTaek-Si, Kyongki-Do, Korea

Tel: 82-31-660-0800, Fax: 82-31-611-9048

Marketing Office

#358-1, Korea Exchange Bank Building 5F

Yatap-Dong, Bundang-Ku, Sungnam-Si, Kyongki-Do, Korea

Tel: 82-31-703-2606~7, Fax: 82-31-704-2607

1. General Description

The document describes the specification of **3528 size, flash white color SMD type LED**.

Chip LEDs, or SMD type LEDs, are designed for automatic surface mounting process of ordinary electronic equipments. Some major applications include office electronic equipments, telecommunication equipments and household appliances.

A generally acceptable driving current for a chip LED is relatively low compared to ordinary lighting devices and high operation current or voltage may cause a catastrophic failure. All customers are expected to keep the guidance and the cautions described in the document and strongly recommended to consult NiNEX prior to applying the devices for sensitive applications, particularly when exceptional quality and reliability are required.

1-1. Features

- Size : 3.5 x 2.8 x 1.8 mm (L×W×H) – SMD(Surface-Mount Device) type
- Encapsulating Epoxy Resin : Phosphor dispersed water clear type
- Viewing Angle ($2\Phi_{1/2}$) : 120˚
- Color Coordinates: x=0.29~0.35, y=0.26~0.39 according to CIE 1931, at If= 60mA
- Color Mixing: AlInGaN based Blue LED Chip and special phosphor were used to convert blue emission to white color.
- Electrodes for soldering: Ag plating on Copper

1-2. Dimension

(unit: mm, tolerance: ± 0.1mm)

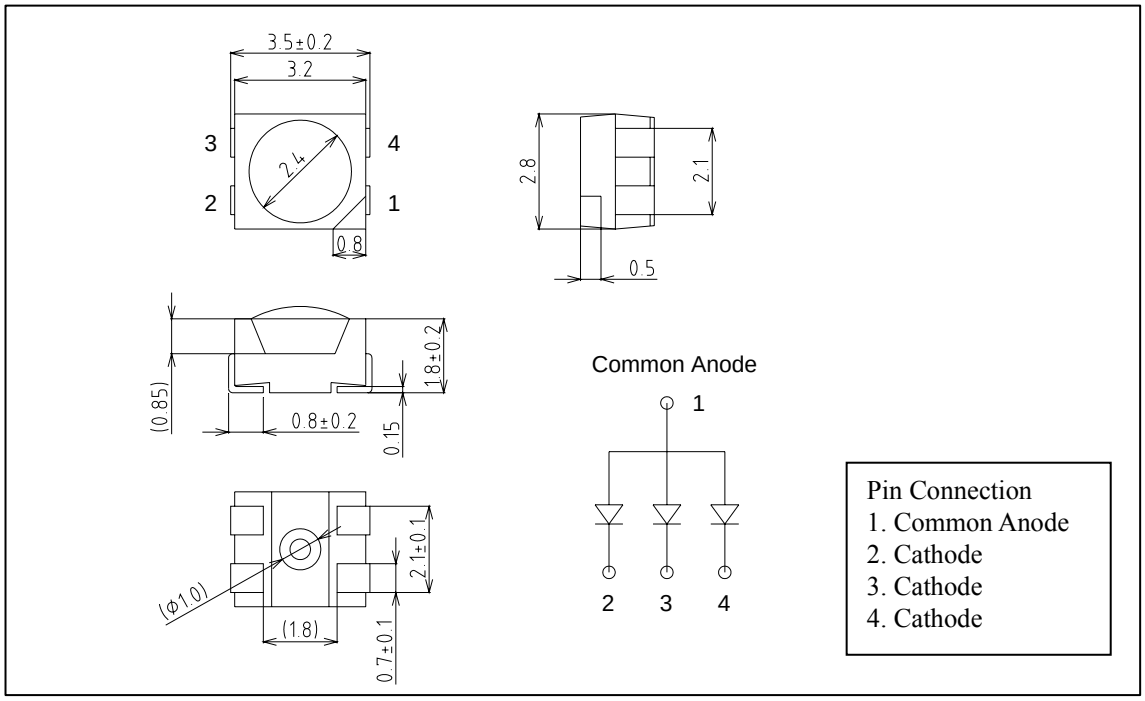

2. Specification

2-1. Absolute Maximum Rating

(T_a = 25°C)

Parameter	Symbol	Maximum Rating	Units
Power Dissipation	P_D	240	mW
Forward Current	I_F	60	mA
Peak Forward Current*1	I_{F_PEAK}	250	mA
Reverse Voltage	V_R	5	V
Operation Temperature	T_{OP}	-30 ~ +85	°C
Storage Temperature	T_{ST}	-40 ~ +100	°C
Soldering Temperature	T_{SOL}	Reflow soldering (lead free): 260°C for 5sec. Reflow soldering (lead): 240°C for 5sec	

*1: Duty ratio = 1/10, Pulse width = 10ms

2-2. Electrical and Optical Characteristics

(T_a = 25°C)

Parameter	Symbol	Test Condition	Min	Max	Units
Forward Voltage*1	V_F	I_F = 60mA	3.0	3.8	V
Luminous Intensity*2	I_V	I_F = 60mA	2.5	5.5	cd
Color Coordinate*3	x	I_F = 60mA	0.29	0.35	
	y	I_F = 60mA	0.26	0.39	
Reverse Current	I_R	V_R = 5V		100	μA

*1: 0.05V tolerance for the forward voltage may be caused by measurement inaccuracy.

*2: 10% tolerance for luminous intensity may be caused by measurement inaccuracy.

*3: The measurement tolerance of color coordinate is 0.01

3. Part Number Description

Part Number: S 3528 WH – E A
① ② ③ ④⑤

3-1. Device Type: ①

- A: Application Products
- C: LED Chip (Dice)
- D: Dot Matrix
- I: Illumination Products
- L: Lamp type LED
- P: High Power Package LED
- S: SMD type LED

3-2. Package Size: ②, Package Thickness: ④

(unit: mm)

②	④	Package Dimension(W × L × T)	Conventional Name
1608	4	1.6 × 0.8 × 0.4	Chip LED 0.4t
1608	6	1.6 × 0.8 × 0.6	Chip LED 0.6t
1608	8	1.6 × 0.8 × 0.8	Chip LED 0.8t
1612	4	1.6 × 1.25 × 0.4	Bi-Color(2 in 1) 0.4t
1612	6	1.6 × 1.25 × 0.6	Bi-Color(2 in 1) 0.6t
1612	8	1.6 × 1.25 × 0.8	Bi-Color(2 in 1) 0.8t
1615	4	1.6 × 1.5 × 0.4	Full Color(3 in 1) 0.4t
1615	6	1.6 × 1.5 × 0.6	Full Color(3 in 1) 0.6t
1615	8	1.6 × 1.5 × 0.8	Full Color(3 in 1) 0.8t
3528	E	3.5 × 2.8 × 1.8	3528 Package
3530	A	3.5 × 3.0 × 1.07	Flash LED
4014	6	4.0 × 1.4 × 0.6	Sideview 0.6t
4014	8	4.0 × 1.4 × 0.8	Sideview 0.8t
4014	1	4.0 × 1.4 × 1.0	Sideview 1.0t
5450	E	5.4 × 5.0 × 1.8	5450 Package

3-3. Emission Color: ③

- Emission color from 1 chip in 1 package

Description	RE	OR	AM	YL	YG	GN	BL	VL
Emission Color	Red	Orange	Amber	Yellow	Yellow-Green	Green	Blue	Violet

- Converted color emission from 1 chip in 1 package

Description	WH	BW	VW	YW	WW
Emission Color	White	Blue-White	Violet-White	Yellow-White	Warm White

- Multi color emission from multi chip in 1 package

Description	GR	BR	BG	FC	7C
Color	Green+Red	Blue+Red	Blue+Green	Red+Green+Blue	Red+Yellow-Green+Blue

3-4. Package Type Information: ⑤

Description	Information	Remarks
A	Common Anode	Multi Chip Package
B	Anode & Cathode for each dice	Multi Chip Package
C	Common Cathode	Multi Chip Package
D	Diffused Epoxy	
T	Transparent Epoxy	
Y	Yellow Phosphor	White color application
Z	Include in Zener Diode	1615, 4014, 3528 Package

4. Sorting Ranks

4-1. Chromaticity Coordinates[*1]

(T_a=25°C)[*2]

Rank	1		2	
	Cx	Cy	Cx	Cy
	0.29	0.26	0.32	0.305
	0.29	0.30	0.32	0.345
	0.32	0.345	0.35	0.39
	0.32	0.305	0.35	0.35

*1: The CIE (1931) standard colorimetric System

*2: Measurement Condition: 20ms pulse @ I_F=60mA, 0.01sr (CIE.LED_B)

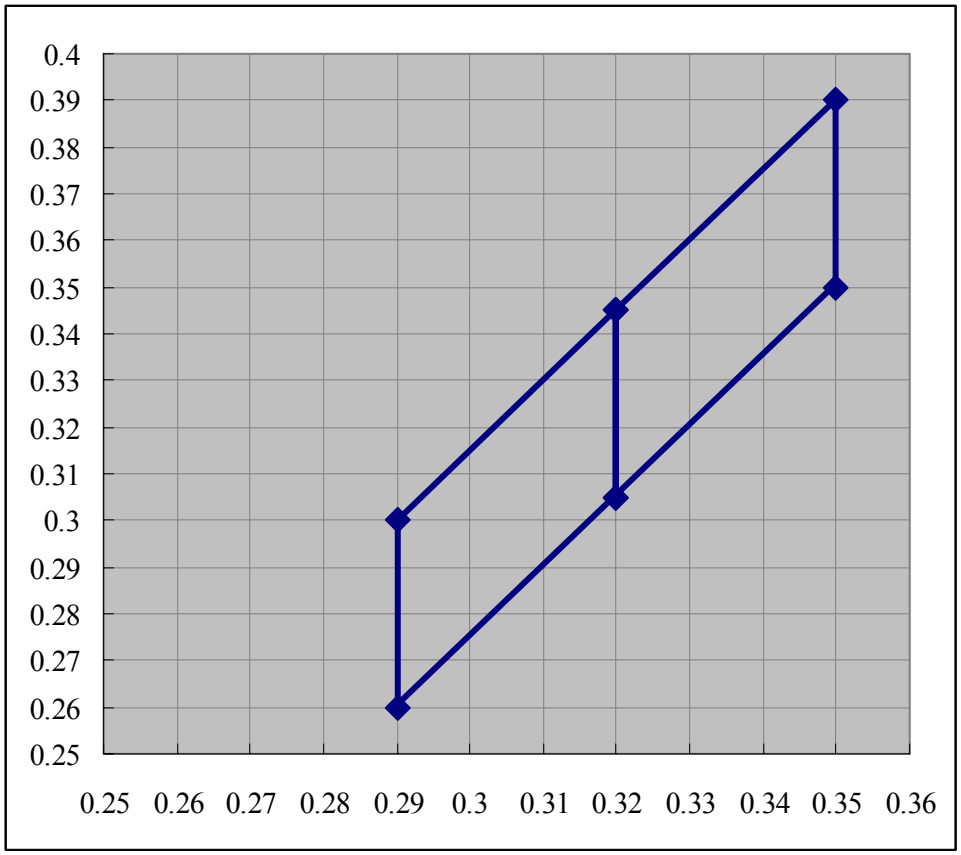

4-2. Luminous Intensity*1

(unit: cd, T_a=25°C)*2

Rank	Min.	Typ.	Max.
A	2.5	3.0	3.5
B	3.5	4.0	4.5
C	4.5	5.0	5.5

*1: 10% tolerance for luminous intensity may be caused by measurement inaccuracy.

*2: Measurement Condition: 20ms pulse @ I_F=60mA

4-3. Forward Voltage*1

(unit: V, T_a=25°C)*2

Rank	Min.	Max.
a	3.0	3.2
b	3.2	3.4
c	3.4	3.6
d	3.6	3.8

*1: 0.05V tolerance for the forward voltage may be caused by measurement inaccuracy.

*2: Measurement Condition: 20ms pulse @ I_F=60mA

- Each product belongs to a rank for each sorting parameter.
- Combination of the ranks composes sorting bins(ex. 1Bc, 2Cc, etc)
- Products which belong to the same sorting bin are taped together.
- Bin mixing is not allowed within a reel.

5. Taping

5-1. Carrier Tape*1 Dimension

(unit: mm)

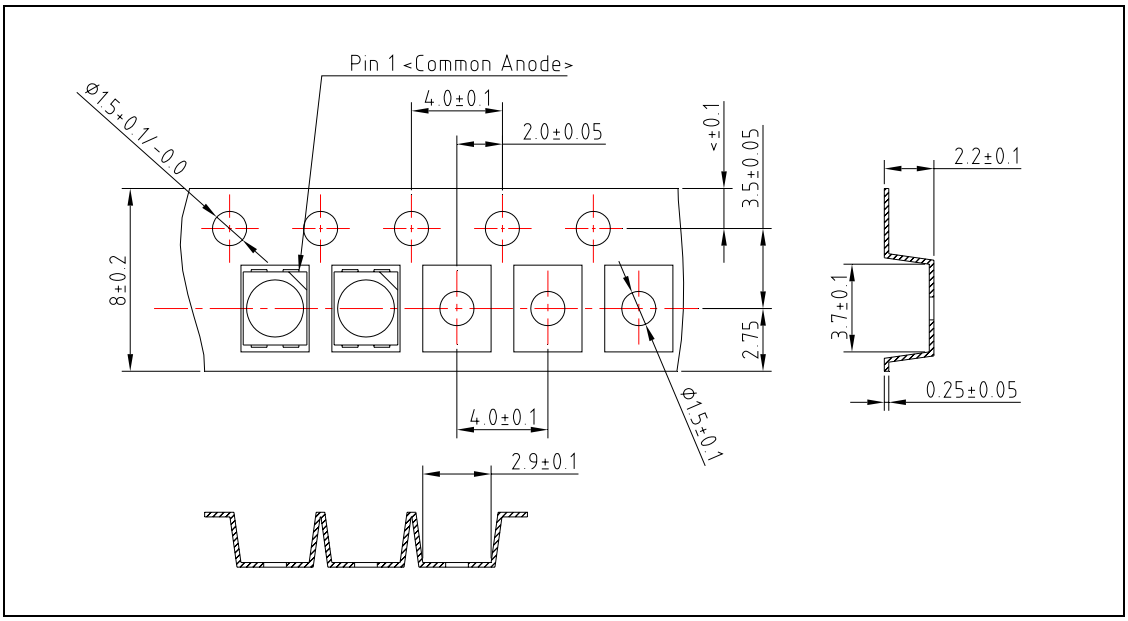

*1: Material: PS, Conductivity: 10^9 Ω ~ 10^{12} Ω

5-2. Reel Dimension*1

(unit: mm)

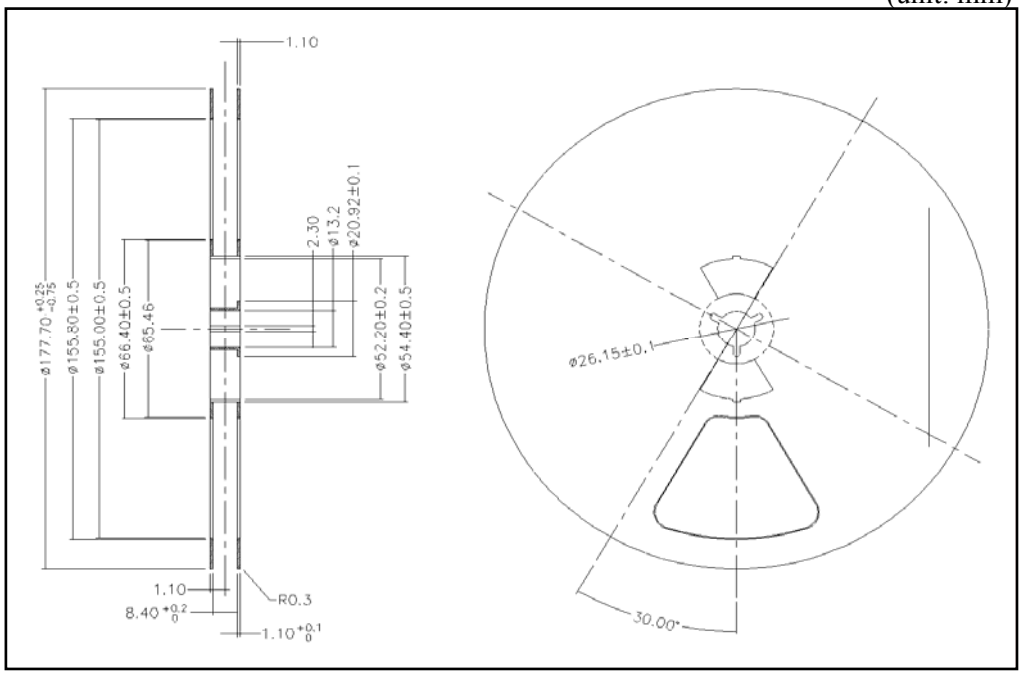

*1: Material: PS, Conductivity: 10^4 Ω ~ 10^5 Ω

6. Packing*1

(unit: mm)

Packing unit	Size (W × L × D)	Quantity (ea)
Antistatic shielding bag (1 Reel)	220 × 250	2,000
Inner carton box (10 Reels)	220 × 220 × 145	20,000
Outer carton box (60 Reels)	450 × 300 × 230	120,000

*1: Each reel sealed in an antistatic shielding bag with silica-gel

Antistatic shielding bag

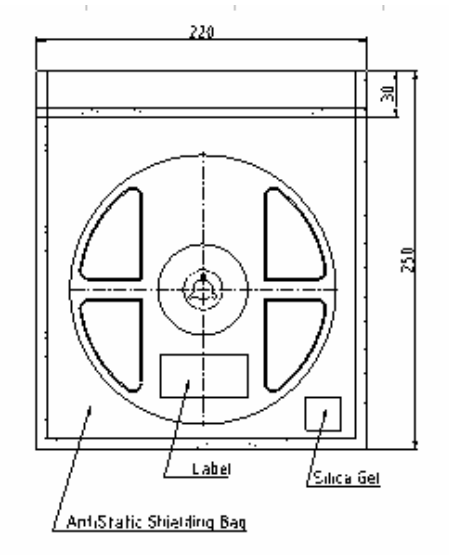

Inner carton box

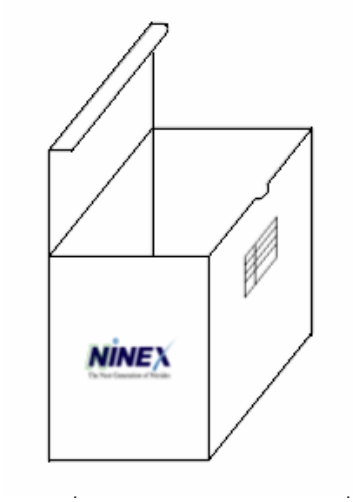

Label

Outer carton box

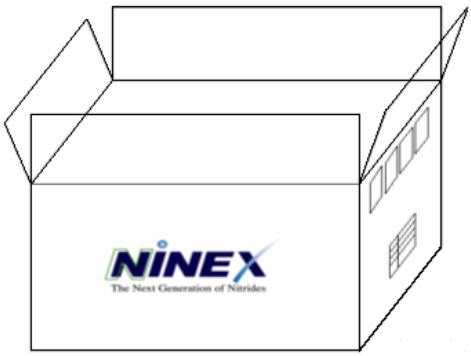

7. Lot Number Description

Lot Number: NS3528WHEA-B1BP 4 B 2 - 000

① ②③④ ⑤

- NiNEX Product Number: ①
- Production Year (3 for 2003, 4 for 2004, 5 for 2005): ②
- Production Month ③ and Date ④

Month	**Jan**	**Feb**	**Mar**	**Apr**	**May**	**Jun**	**Jul**	**Aug**	**Sep**	**Oct**	**Nov**	**Dec**			
③	A	B	C	D	E	F	G	H	I	J	K	L			
Date	**1**	**2**	**3**	**4**	**5**	**6**	**7**	**8**	**9**	**10**	**11**	**12**	**13**	**14**	**15**
④	1	2	3	4	5	6	7	8	9	10	A	B	C	D	E
Date	**16**	**17**	**18**	**19**	**20**	**21**	**22**	**23**	**24**	**25**	**26**	**27**	**28**	**29**	**30**
④	F	G	H	I	J	K	L	M	N	O	P	Q	R	S	T

- Serial No.: ⑤

8. Soldering

8-1. Recommended Soldering Condition*1, *2

Reflow Soldering		
	Lead solder	Lead-free *2
Pre-heating	140 ~ 160 °C	180~200°C
Pre-heat time	60 ~ 120 sec.	120 sec.
Peak temperature	max. 240°C	max. 260°C
Soldering time	max. 5 sec.	max. 5 sec.

Manual Soldering		
	Lead Solder	Lead-free*2
Temperature	max. 300°C	max. 350°C.
Time	max. 3 sec.	max. 3 sec.
No multiple soldering allowed		

*1: After reflow soldering, rapid cooling should be avoided.

*2: N_2 reflow is recommended

8-2. Recommended Reflow Soldering Profile

- Lead Solder

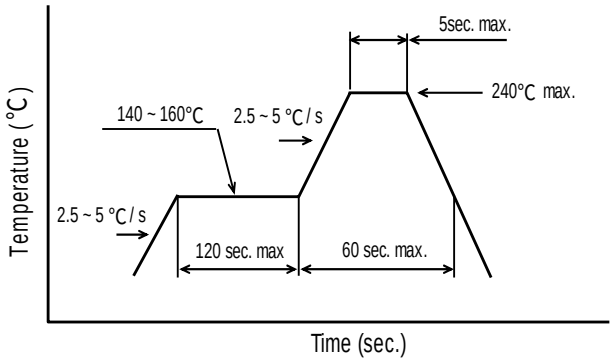

- Lead-free Solder

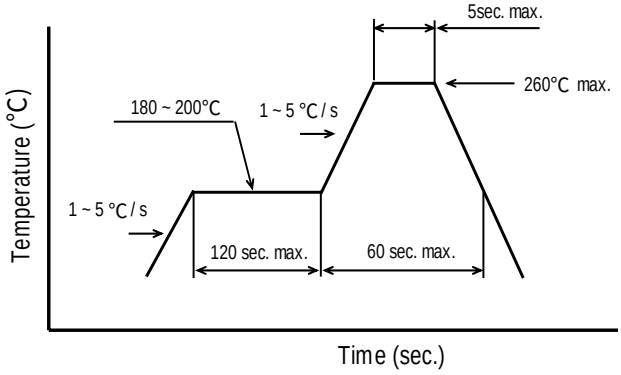

8-3. Recommended Soldering Pattern

(Unit : mm)

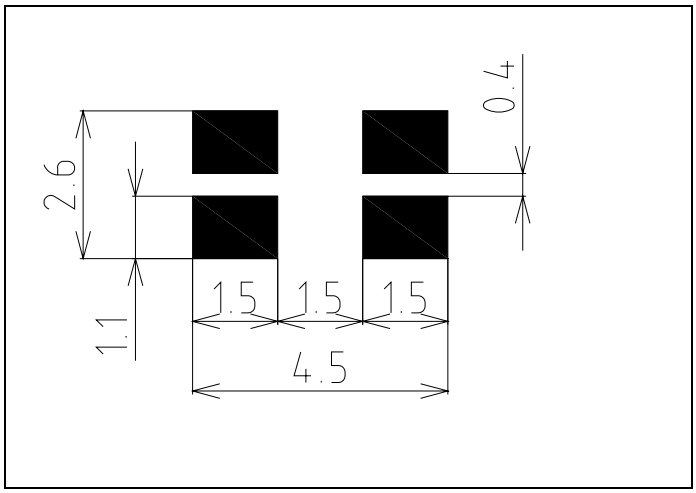

- During the soldering process, keep the minimum clearance between the resin and the soldering point.
- Resin should not contact molten solder.
- No mechanical distortion or stress allowed after soldering.
- During soldering, do not apply any stress to the lead frame, particularly when heated.
- A soldering iron with a grounded tip is recommended.
  An isolator should also be installed where risk of static generation is high.

9. Cautions

9-1. Safety

- Customers should comply with the laws and public regulations concerning safety.
- Operation temperature or driving current may affect emission color.
  Please check sorting condition and characteristic diagram to estimate color shift.
- Moisture and dust may affect reliability issues.
  Do not open the shielding bag under humid or dirty environment.
- When installing the product in PCB, the device should not contact with other components.
- Do not apply force to the LED under high-temperature condition.
- Do not apply friction to the LED using hard material.
- Avoid exposure to chemicals which may dissolve the LED package and the epoxy.
- Use IPA(Isopropyl Alcohol) as a solvent when washing is required.

9-2. Static Electricity

- These products are sensitive to static electricity.
  Anti–electrostatic glove or wristband is recommended when handling the LEDs.
- A protection device should be installed in the LED driving circuit to eliminate or minimize the surge current effect.
- Proper grounding of Products, use of conductive mat, semi-conductive working uniform and shoes, and semi-conductive containers are considered to be effective as countermeasures against static electricity and surge.

9-3. Storage Condition

- Before opening the anti-static shielding package:
  LEDs should be kept at 30°C or less and RH 80% or less.
  Maximum acceptable storage period is 6 months.
- After opening the anti-static shielding package:
  LEDs should be kept at 30°C or less and RH 70% or less.
  LEDs should be soldered within 7 days after opening the package.

10. Characteristic Diagram

● **Forward Voltage vs. Forward Current**

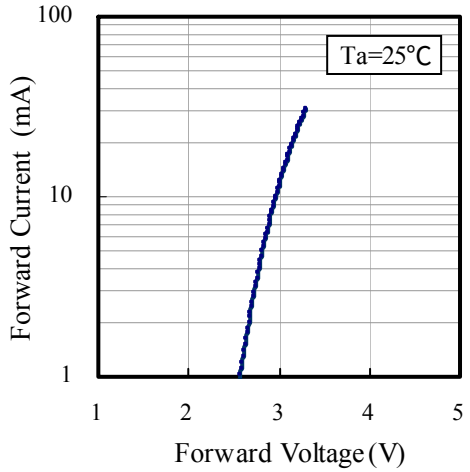

● **Ambient Temperature vs. Allowable Forward Current**

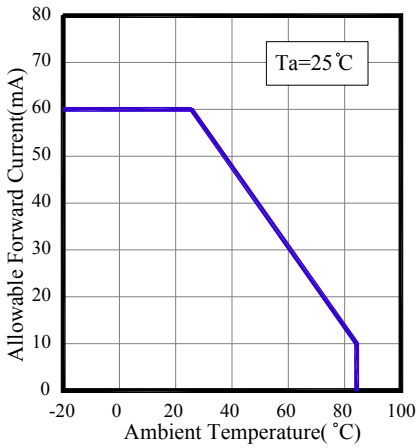

● **Ambient Temperature vs. Forward Voltage**

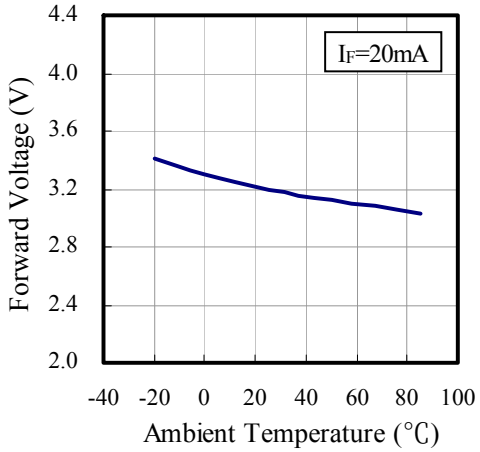

● **Ambient Temperature vs. Relative Luminosity**

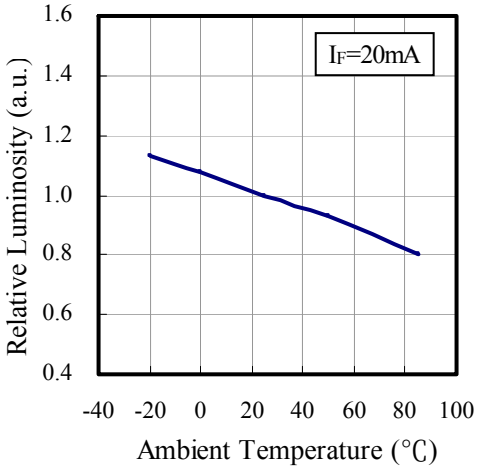

● **Forward Current vs. Relative Luminosity**

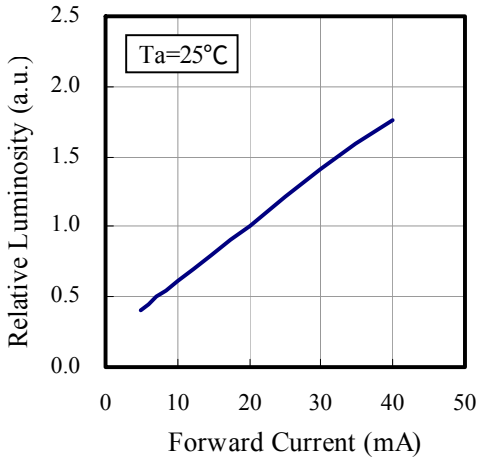

● **Forward Current vs. Chromaticity Coordinate**

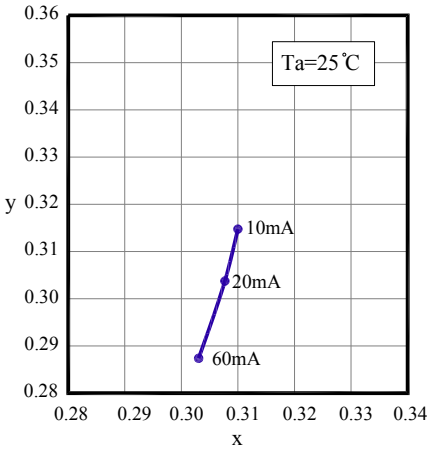

● **Spectrum**

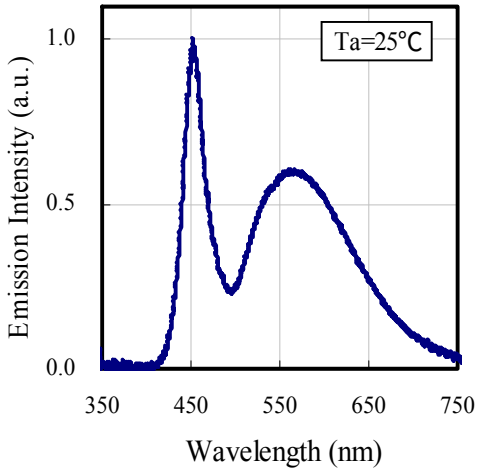

● **Radiation Diagram**

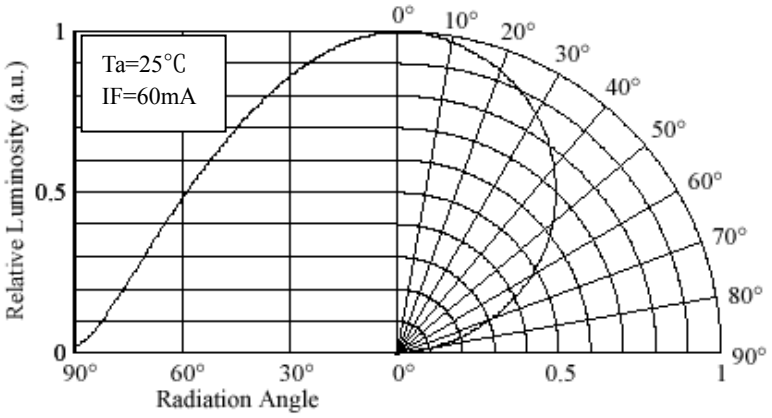

11. Reliability Test

11-1. Test items and results

Test Item	Reference Standard	Test Conditions	Number of Damaged Parts
Normal Temperature Lifetime Test	MIL-STD-883:1005 JIS C 7035	T_a=25℃ I_f=60mA Test Time=1,000hrs	0/22
High Temperature Operating Life (HTOL)	MIL STD 883E-1005 EIAJ ED 4701-100	T_a=85℃ I_f=10mA Test Time=1,000hrs	0/22
Temperature Humidity Bias (THB)	EIAJ ED 4701-100	T_a=60℃ / RH=90% I_f=30mA Test Time=500hrs	0/22
Temperature Cycle	MIL-STD-883 :1010 EIAJ ED 4701-100	-30℃ ~ 25℃ ~ 100℃ ~ 25℃ 30min 5min 30min 5min Test Time=50cycles	0/22
High Temperature Storage	MIL-STD-883 : 1008 EIAJ ED 4701-200	T_a=100℃ Test Time=1,000hrs	0/22
Low Temperature Storage	EIAJ ED 4701-200	T_a=-40℃ Test Time=1,000hrs	0/22
ESD(Electro-static Discharge) Rating	MIL STD-883E : 3015 EIAJ ED 4701-300	HBM(Human Body Model) C=100pF R =1.5KΩ Discharge times : 3 times	0/22

11-2. Criteria of failure for the reliability

Test Item	Symbol	Test Condition	Judgment Criteria
Forward Voltage	V_f	I_f= 60mA	V_f > 1.1×U.S.L[*1]
Luminous Intensity	I_v	I_f = 60mA	I_v < 0.7×Initial value
ESD Rating[*2]	ESD	HBM	Class 2 or more

*1: U.S.L : Upper Standard Level
*2: ESD Rating forward directed by HBM (Human Body Model)

Classification[*1]	Class 1	Class 2	Class 3A	Class 3B
Withstand Voltage	250 - 1,999V	2,000 - 3,999V	4,000 -7,999V	8,000V or more

*1: EIAJ ED 4701-300

Part Number.	**S3528WH-EA**		
Document ID	NS-120		
Events S/N	Date	Summary of Revision	Remarks
1	2004. 08. 9	Newly Establishment	-
2	2004. 12. 07	Revise IV Rank & Lot No.	-