FEATURES

- **3.3V and 5V power supply options**
- **250ps propagation delay**
- **High bandwidth output transitions**
- **Internal 75KΩ input pull-down resistors**
- **Replaces SY10/100EL16**
- **Improved output waveform characteristics**
- **Available in 8-pin (3mm) MSOP and SOIC package**

DESCRIPTION

The SY10/100EL16V are differential receivers. The devices are functionally equivalent to the E116 devices, with higher performance capabilities. With output transition times significantly faster than the E116, the EL16V is ideally suited for interfacing with high-frequency sources.

The EL16V provides a V_{BB} output for either single-ended use or as a DC bias for AC coupling to the device. The V_{BB} pin should be used only as a bias for the EL16V as its current sink/source capability is limited. Whenever used, the V_{BB} pin should be bypassed to ground via a 0.01µf capacitor.

Under open input conditions (pulled to V_{EE}), internal input clamps will force the Q output LOW.

PIN CONFIGURATION/BLOCK DIAGRAM

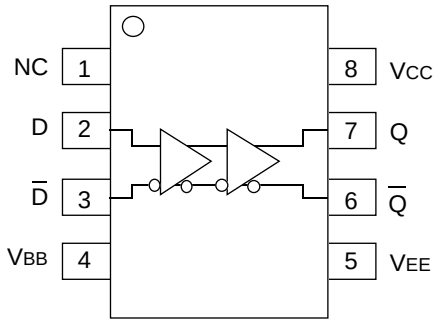

MSOP and SOIC

PIN NAMES

Pin	Function
D	Data Inputs
Q	Data Outputs
V_{BB}	Reference Voltage Output

DC ELECTRICAL CHARACTERISTICS

V_{EE} = V_{EE} (Min.) to V_{EE} (Max.); V_{CC} = GND

Symbol	Parameter	T_A = –40°C			T_A = 0°C			T_A = +25°C			T_A = +85°C			Unit
		Min.	Typ.	Max.	Min.	Typ.	Max.	Min.	Typ.	Max.	Min.	Typ.	Max.	
I_{EE}	Power Supply Current													mA
	10EL	—	18	22	9	18	22	9	18	22	9	18	22	
	100EL	—	18	22	9	18	22	9	18	22	9	21	26	
V_{BB}	Output Reference Voltage 10EL	–1.43	—	–1.30	–1.38	—	–1.27	–1.35	—	–1.25	–1.31	—	–1.19	V
	100EL	–1.38	—	–1.26	–1.38	—	–1.26	–1.38	—	–1.26	–1.38	—	–1.26	
I_{IH}	Input HIGH Current	—	—	150	—	—	150	—	—	150	—	—	150	µA

NOTE:

1. Parametric values specified at: 10/100EL16V Series: -3.0V to -5.5V.

AC ELECTRICAL CHARACTERISTICS[1]

V_{EE} = V_{EE} (Min.) to V_{EE} (Max.); V_{CC} = GND

Symbol	Parameter	T_A = –40°C			T_A = 0°C			T_A = +25°C			T_A = +85°C			Unit
		Min.	Typ.	Max.	Min.	Typ.	Max.	Min.	Typ.	Max.	Min.	Typ.	Max.	
t_{PLH} t_{PHL}	Propagation Delay to Output D (Diff)	125	250	375	175	250	325	175	250	325	205	280	355	ps
	D (SE)	75	250	425	125	250	375	125	250	375	155	280	405	
t_{skew}	Duty Cycle Skew[2] (Diff)	—	5	—	—	5	20	—	5	20	—	5	20	ps
V_{PP}	Minimum Input Swing[3]	150	—	—	150	—	—	150	—	—	150	—	—	mV
V_{CMR}	Common Mode Range[4]	–1.3	—	–0.4	–1.4	—	–0.4	–1.4	—	–0.4	–1.4	—	–0.4	V
t_r t_f	Output Rise/Fall Times Q (20% to 80%)	100	225	350	100	225	350	100	225	350	100	225	350	ps

NOTES:

1. Parametric values specified at: 10/100EL16V Series: -3.0V to -5.5V.
2. Duty cycle skew is the difference between a t_{PLH} and t_{PHL} propagation delay through a device.
3. Minimum input swing for which AC parameters are guaranteed. The device has a DC gain of ≈40.
4. The CMR range is referenced to the most positive side of the differential input signal. Normal operation is obtained if the HIGH level falls within the specified range and the peak-to-peak voltage lies between V_{PP} min. and 1V. The lower end of the CMR range varies 1:1 with V_{EE}. The numbers in the spec table assume a nominal V_{EE} = –3.3V. Note for PECL operation, the V_{CMR} (min) will be fixed at 3.3V – |V_{CMR} (min)|.

PRODUCT ORDERING CODE

Ordering Code	Package Type	Operating Range	V_{EE} Range (V)
SY10EL16VKCTR	K8-1	Commercial	-3.0 to -5.5
SY100EL16VKCTR	K8-1	Commercial	-3.0 to -5.5
SY10EL16VZC	Z8-1	Commercial	-3.0 to -5.5
SY10EL16VZCTR	Z8-1	Commercial	-3.0 to -5.5
SY100EL16VZC	Z8-1	Commercial	-3.0 to -5.5
SY100EL16VZCTR	Z8-1	Commercial	-3.0 to -5.5

8 LEAD MSOP (K8-1)

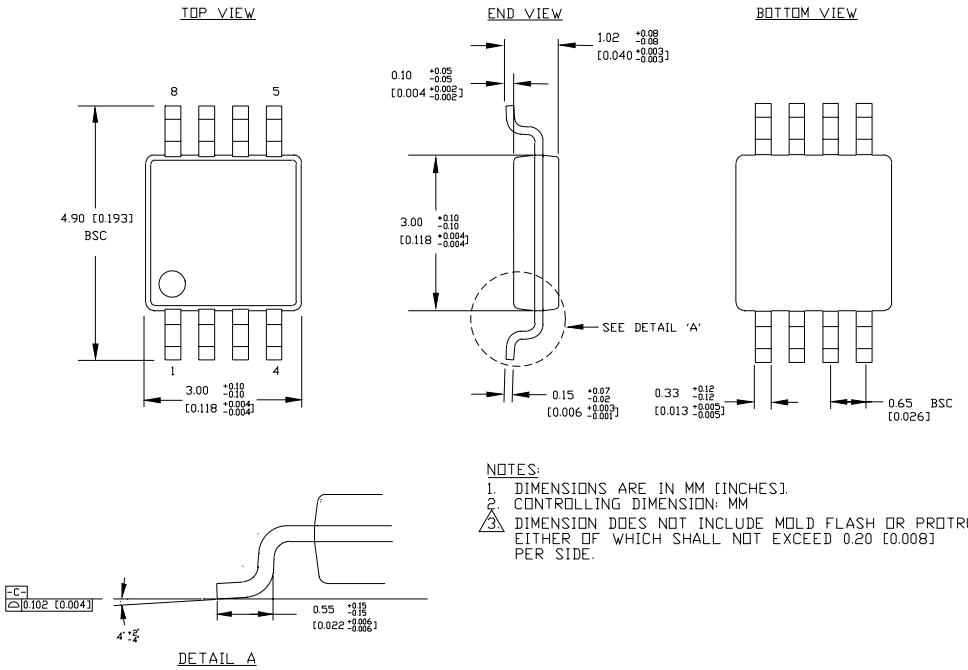

NOTES:
1. DIMENSIONS ARE IN MM [INCHES].
2. CONTROLLING DIMENSION: MM
3. DIMENSION DOES NOT INCLUDE MOLD FLASH OR PROTRUSIONS, EITHER OF WHICH SHALL NOT EXCEED 0.20 [0.008] PER SIDE.

Rev. 01

MICREL-SYNERGY 3250 SCOTT BOULEVARD SANTA CLARA CA 95054 USA
TEL + 1 (408) 980-9191 FAX + 1 (408) 914-7878 WEB http://www.micrel.com

This information is believed to be accurate and reliable, however no responsibility is assumed by Micrel for its use nor for any infringement of patents or other rights of third parties resulting from its use. No license is granted by implication or otherwise under any patent or patent right of Micrel Inc.

© 2000 Micrel Incorporated