THIS DRAWING IS UNPUBLISHED. RELEASED FOR PUBLICATION 20
© COPYRIGHT 20 BY TYCO ELECTRONICS CORPORATION. ALL RIGHTS RESERVED.

LOC	DIST
FT	0

REVISIONS

P	LTR	DESCRIPTION	DATE	DWN	APVD
	B	REVISED PER 0G3B-0119-01	06FEB2002	EZ	DB
	C	REVISED EC 0G3B-0401-04	02JUN2004	SW	CR
	C1	REVISED PER ECO-08-021895	04SEP2008	HMR	CR
	C2	REVISED PER ECO-08-022366	09SEP2008	HMR	CR

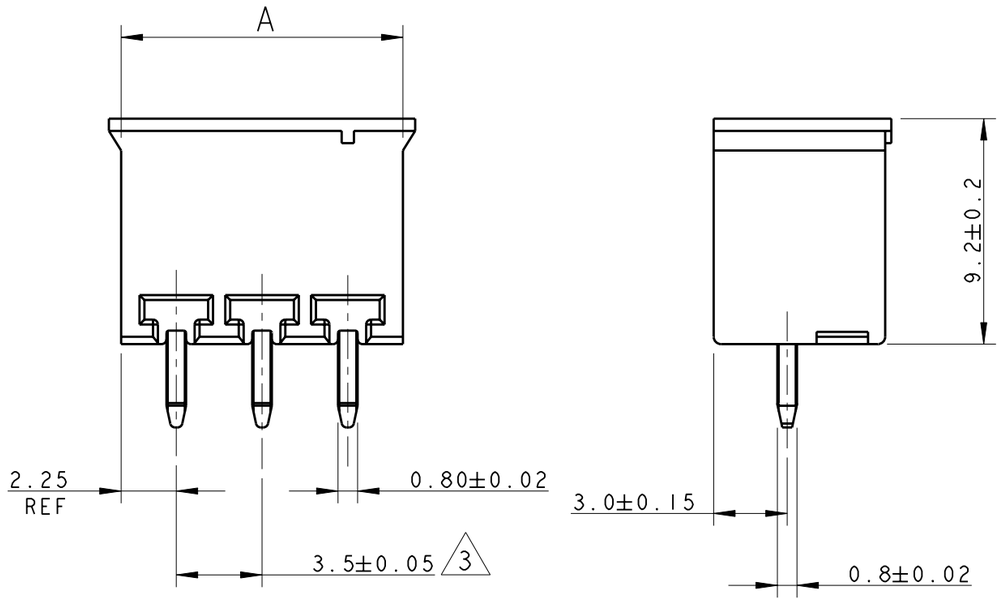

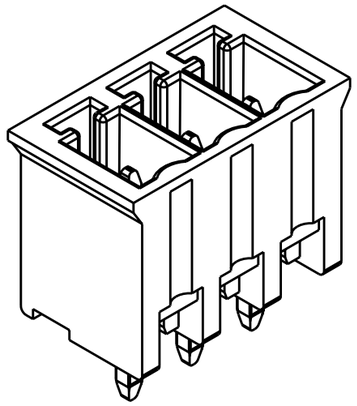

284514-3 AS SHOWN

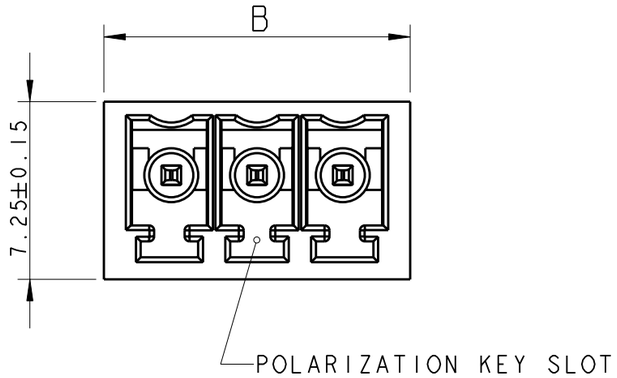

1 MATERIALS AND FINISH
HOUSING : PA 6.6, UL 94-V0, COLOR GREEN
TERMINAL : PHOSPHOR BRONZE, SEE TABLE

2 SUITABLE FOR 1.6-2.4 mm. PC BOARD THICKNESS

3 NOT CUMULATIVE TOLERANCE

4 PRELIMINARY PART NUMBER

PLATING	B	A	NO OF POSN	PART NUMBER
4 AU FL	26.5	25.5	7	2-284514-6
TIN	89.5	88.5	25	2-284514-5
TIN	86.0	85.0	24	2-284514-4
TIN	82.5	81.5	23	2-284514-3
TIN	79.0	78.0	22	2-284514-2
TIN	75.5	74.5	21	2-284514-1
TIN	72.0	71.0	20	2-284514-0
TIN	68.5	67.5	19	1-284514-9
TIN	65.0	64.0	18	1-284514-8
TIN	61.5	60.5	17	1-284514-7
TIN	58.0	57.0	16	1-284514-6
TIN	54.5	53.5	15	1-284514-5
TIN	51.0	50.0	14	1-284514-4
TIN	47.5	46.5	13	1-284514-3
TIN	44.0	43.0	12	1-284514-2
TIN	40.5	39.5	11	1-284514-1
TIN	37.0	36.0	10	1-284514-0
TIN	33.5	32.5	9	284514-9
TIN	30.0	29.0	8	284514-8
TIN	26.5	25.5	7	284514-7
TIN	23.0	22.0	6	284514-6
TIN	19.5	18.5	5	284514-5
TIN	16.0	15.0	4	284514-4
TIN	12.5	11.5	3	284514-3
TIN	9.0	8.0	2	284514-2

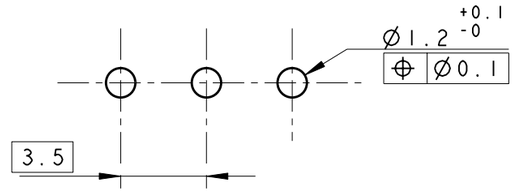

RECOMMENDED PC BOARD LAYOUT

THIS DRAWING IS A CONTROLLED DOCUMENT FOR TYCO ELECTRONICS CORPORATION IT IS SUBJECT TO CHANGE AND THE CONTROLLING ENGINEERING ORGANIZATION SHOULD BE CONTACTED FOR THE LATEST REVISION.

DIMENSIONS: mm

TOLERANCES UNLESS OTHERWISE SPECIFIED:
0 PLC ±-
1 PLC ±.3
2 PLC ±.25
3 PLC ±-
4 PLC ±-
ANGLES ±2

MATERIAL 1

FINISH 1

DWN E. ZANOLINI 06FEB2002
CHK E. ZANOLINI 06FEB2002
APVD D. BIEVENOUR 06FEB2002
PRODUCT SPEC 108-20166
APPLICATION SPEC 114-20079
WEIGHT -

Tyco Electronics
Tyco Electronics
Harrisburg, PA 17105-3608

NAME TERMINAL BLOCK, HEADER ASSEMBLY STRAIGHT, CLOSED ENDS 3.5mm PITCH

SIZE	CAGE CODE	DRAWING NO	RESTRICTED TO
A3	00779	C-284514	-

CUSTOMER DRAWING | SCALE 4:1 | SHEET 1 OF 1 | REV C2

AMP 1470-19 REV 31MAR2000

Pro/ENGINEER DRAWING