593-280

DRAWING MADE IN THIRD ANGLE PROJECTION

THIS DRAWING IS UNPUBLISHED. RELEASED FOR PUBLICATION ,19 .

© COPYRIGHT 19 BY AMP INCORPORATED. ALL INTERNATIONAL RIGHTS RESERVED.

| LOC | DIST |
|---|---|
| FT | 4 |

REVISIONS

| P | F | ZONE | LTR | DESCRIPTION | DATE | APPD |
|---|---|---|---|---|---|---|
| | | | L | REDRAWN | 4/29/91 | – |
| | | | M | REV PER ECN 806815 | 10/16/92 | KB |
| | | | N | ADDED -8 AND -9 PER NPR 4477 | 01/14/93 | KB |
| | | | N1 | ADDED 1--0 PER NPR 4832 | 07/27/93 | AF |
| | | | P | OBSOLETED -8 & -9 PER EC 0020-559-96 | 03 JAN 97 | TW |

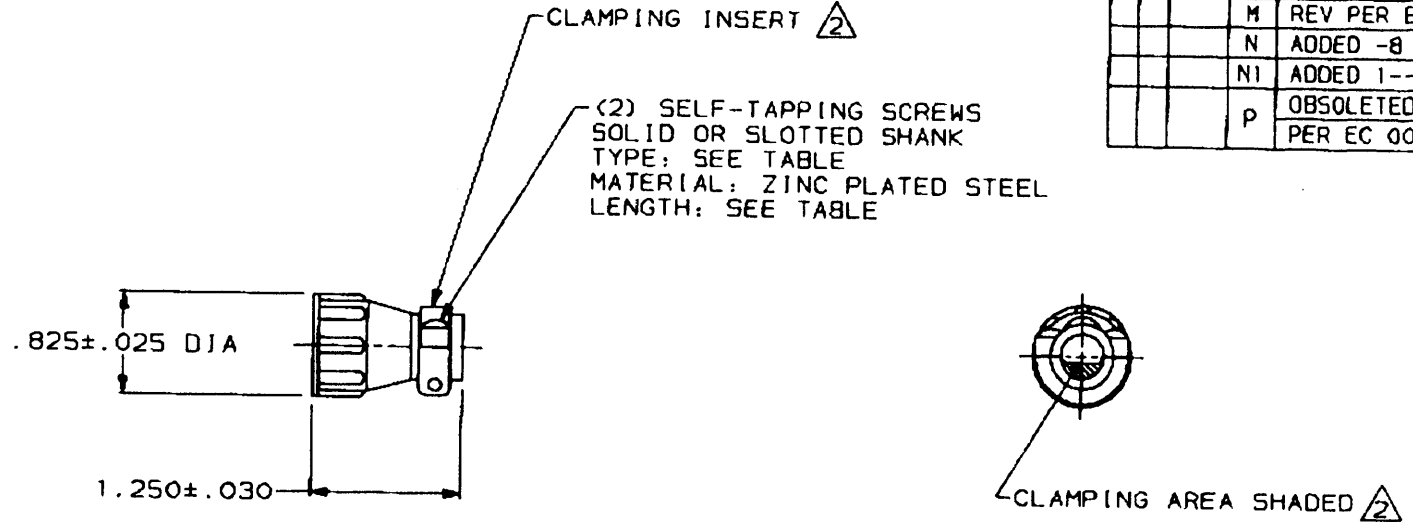


| | PACKAGING | SCREW LENGTH | SCREW TYPE | PART NUMBER |
|---|---|---|---|---|
| | SMALL PACK | .375 | #5-20 | 1-206062-0 |
| AMP BRAZIL USE ONLY | INDIVIDUAL | 12mm | 3mm-20 | 5 206062-9 |
| AMP BRAZIL USE ONLY | INDIVIDUAL | 10mm | 3mm-20 | 5 206062-8 |
| | 4 BULK | .500 | #5-20 | 206062-4 |
| | INDIVIDUAL | .500 | #5-20 | 206062-3 |
| | 4 BULK | .375 | #5-20 | 206062-2 |
| | INDIVIDUAL | .375 | #5-20 | 206062-1 |

1. PARTS PACKAGED UNASSEMBLED.
2. CABLE CLAMPING AREA ADJUSTABLE FROM .004 TO .055 SQ IN BY REVERSING CLAMPING INSERTS.
3. .329 MAXIMUM CABLE OUTSIDE DIAMETER.
4. BULK PACKAGED KITS TO BE ORDERED IN MULTIPLES OF 400 ONLY.
5. OBSOLETE PART NUMBER.

DO NOT SCALE PRINT. UNLESS SPECIFIED DIMENSIONS IN INCHES TOLERANCES ON: 2 PLC DEC ± - 3 PLC DEC ± - ANGLES ± -

MATERIAL: THERMOPLASTIC, BLACK

FINISH: -

DR 4/29/91 A. GRAFF
CHK 7-30-92 W.G. LEMKER
APPD 7-30-92 K. BUMER
APPD 7-30-92 C. ROHDE
PRODUCT SPEC 108-10024
APPLICATION SPEC -
WEIGHT -

AMP Incorporated
Harrisburg, PA 17105-3608

NAME: CABLE CLAMP KIT, STANDARD, SHELL SIZE 11, CPC

SIZE B | CAGE CODE 00779 | DRAWING NO 206062

SCALE 1:1 | SHEET 1 OF 1

AMP 1470-15 REV 11-88

03-JAN-97 11:08:12 amp40973 /home/ssrv026d/dsk04/dept4021/amp40973/edsmod

CUSTOMER DRAWING