THIS DRAWING IS UNPUBLISHED. RELEASED FOR PUBLICATION ,19 .
© COPYRIGHT 19 BY AMP INCORPORATED. ALL INTERNATIONAL RIGHTS RESERVED.

589-639

MOD	LOC	DIST
4	BD	35

REVISIONS

P	F	ZONE	LTR	DESCRIPTION	DATE	APPD
			F	REDRAWN W/O CHANGE PER EC 0020-569-94	03/08/93	-
			G	REACTIVATE -2 PER EC 0020-1075-94	12/05/94	AF

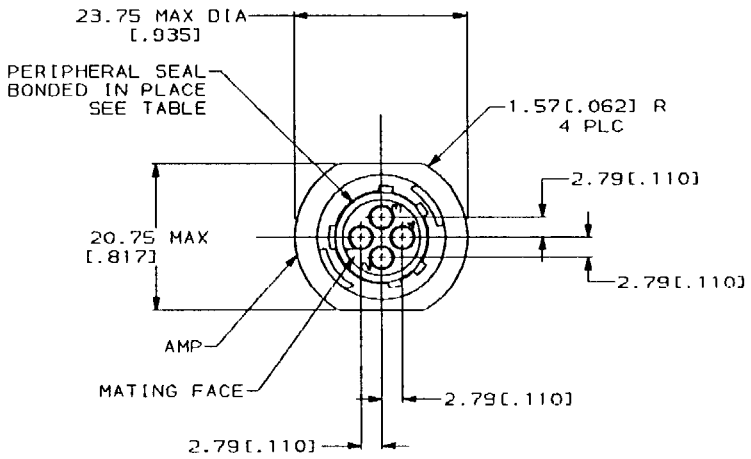

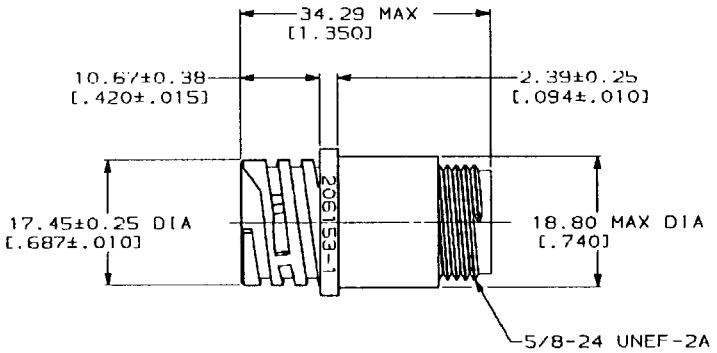

589 639.

1. CAVITY IDENTIFICATION ON FRONT AND REAR FACE.
2. RECEPTACLE WILL ACCEPT FOUR (4) MULTIMATE PIN CONTACTS.

PERIPHERAL SEAL	PART NO
YES	206153-2
NO	206153-1

DO NOT SCALE PRINT.
UNLESS SPECIFIED
DIMENSIONS IN mm [INCHES]
TOLERANCES ON ,
2 PLC DEC ± 0.13 [.005]
3 PLC DEC ± -
ANGLES ± -

MATERIAL: NYLON, BLACK

FINISH: -

DR 05/18/94 D.HARDY
CHK 05/20/94 R.STONE
APPD 07/12/94 A.FRANTUM
APPD 07/12/94 A FRANTUM
PRODUCT SPEC 108-10024
APPLICATION SPEC -
WEIGHT -

AMP
AMP Incorporated
Harrisburg, PA 17105-3608

NAME: RECEPTACLE HOUSING, STANDARD SEX, SHELL SIZE 11, CPC

SIZE C | CAGE CODE 00779 | DRAWING NO C-206153
SCALE 2:1 | SHEET 1 OF 1

CUSTOMER DRAWING

THIS DRAWING IS A CONTROLLED DOCUMENT FOR AMP INCORPORATED. IT IS SUBJECT TO CHANGE AND THE CONTROLLING ENGINEERING ORGANIZATION SHOULD BE CONTACTED FOR THE LATEST REVISION.

206153