147 Central Avenue
Hackensack, New Jersey 07601
Tel: 201-489-8989 • Fax: 201-489-6911

CHICAGO MINIATURE LAMP, INC.
WHERE INNOVATION COMES TO LIGHT

5610R, 5611R Series Rectangular LED Assembly

DESCRIPTION AND FEATURES

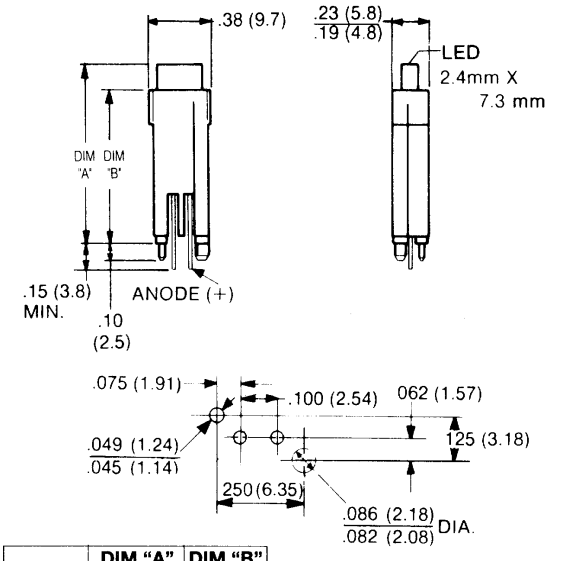

	DIM "A" (NOM.)	DIM "B" (NOM.)
5610R	.965(24.5)	.80(20.3)
5611R	.725(18.4)	.57(14.5)

ALL DIMENSIONS ARE IN INCHES (MM).

FEATURES

- Block mounting design assures height and side-by-side spacing-alignment saves assembly costs
- High light output-5 mcd (red)
- Large 2.4 mm x 7.3 flat LED face has even light distribution
- Diffusion lens
- Holding/Press-in pins secures block to board while being soldered
- Standoffs prevent flux entrapment

Housing: Black Nylon (UL 94V-O)

ELECTRO-OPTICAL CHARACTERISTICS AND RATINGS

Part Number	Color	Typical Intensity (mcd)	Rated Current (mA)	Continuous Forward Current Max. (mA)	Forward Voltage Typ. (V)	Forward Voltage Max. (V)	Peak Forward Current At 1ms-300 PPS (A)	Reverse Breakdown Voltage Min. (V)	Peak Wavelength nM)	For More Complete LED Data (Page)
5610R1	Red	5	20	30	2.1	3.0	.09	5	635	1-101
5610R3	Amber	3.5	20	30	2.2	3.0	.09	5	600	1-101
5610R5	Green	3	20	30	2.3	3.0	.09	5	565	1-101
5610R7	Yellow	5	20	30	2.2	3.0	.06	5	585	1-101
5611R1	Red	5	20	30	2.1	3.0	.09	5	635	1-101
5611R3	Amber	3.5	20	30	2.2	3.0	.09	5	600	1-101
5611R5	Green	7	20	30	2.3	3.0	.09	5	565	1-101
5611R7	Yellow	5	20	30	2.2	3.0	.06	5	585	1-101

Chicago Miniature Lamp reserves the right to make specification revisions that enhance the design and/or performance of the product.