REVISIONS			
LTR	DESCRIPTION	DATE (YR-MO-DA)	APPROVED
A	Added device type 06. -sld	99-03-10	K. A. Cottongim

REV																				
SHEET																				
REV	A	A	A	A	A															
SHEET	15	16	17	18	19															

REV STATUS OF SHEETS															
REV	A	A	A	A	A	A	A	A	A	A	A	A	A	A
SHEET	1	2	3	4	5	6	7	8	9	10	11	12	13	14

PMIC N/A

STANDARD MICROCIRCUIT DRAWING

THIS DRAWING IS AVAILABLE FOR USE BY ALL DEPARTMENTS AND AGENCIES OF THE DEPARTMENT OF DEFENSE

AMSC N/A

PREPARED BY
Gary Zahn

CHECKED BY
Michael C. Jones

APPROVED BY
Kendall A. Cottongim

DRAWING APPROVAL DATE
96-10-21

REVISION LEVEL
A

DEFENSE SUPPLY CENTER COLUMBUS
COLUMBUS, OHIO 43216-5000

MICROCIRCUIT, MEMORY, 128K X 8-BIT, ELECTRICALLY ERASABLE PROGRAMMABLE READ ONLY MEMORY, MONOLITHIC SILICON

SIZE	CAGE CODE	
A	**67268**	**5962-96796**

SHEET 1 OF 19

DISTRIBUTION STATEMENT A. Approved for public release; distribution is unlimited.

1. SCOPE

1.1 Scope. This drawing documents five product assurance classes, class D (lowest reliability), class E, (exceptions), class G (lowest high reliability), class H (high reliability), and class K, (highest reliability) and a choice of case outlines and lead finishes are available and are reflected in the Part or Identifying Number (PIN). When available, a choice of radiation hardness assurance levels are reflected in the PIN.

1.2 PIN. The PIN shall be as shown in the following example:

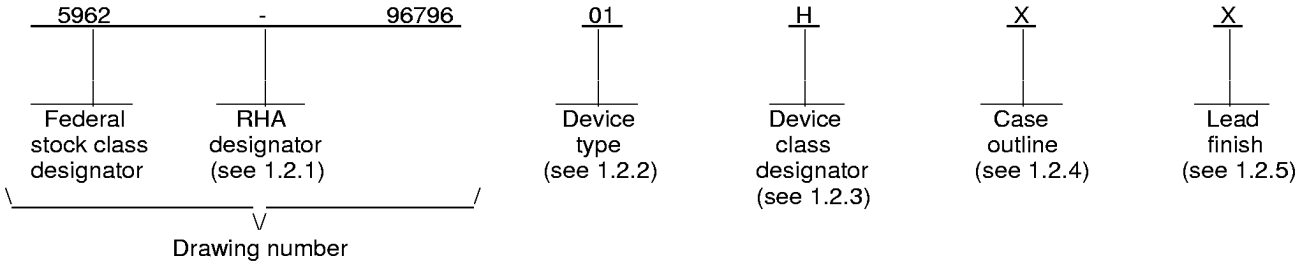

1.2.1 Radiation hardness assurance (RHA) designator. Device classes H and K RHA marked devices shall meet the MIL-PRF-38534 specified RHA levels and shall be marked with the appropriate RHA designator. A dash (-) indicates a non-RHA device.

1.2.2 Device type(s). The device type(s) shall identify the circuit function as follows:

Device type	Generic number	Circuit function	Access time
01	WME128K8-300CQ	EEPROM, 128K x 8-bit	300 ns
02	WME128K8-250CQ	EEPROM, 128K x 8-bit	250 ns
03	WME128K8-200CQ	EEPROM, 128K x 8-bit	200 ns
04	WME128K8-150CQ	EEPROM, 128K x 8-bit	150 ns
05	WME128K8-140CQ	EEPROM, 128K x 8-bit	140 ns
06	WME128K8-120CQ	EEPROM, 128K x 8-bit	120 ns

1.2.3 Device class designator. This device class designator shall be a single letter identifying the product assurance level as follows:

Device class	Device performance documentation
H or K	Certification and qualification to MIL-PRF-38534

1.2.4 Case outline(s). The case outline(s) shall be as designated in MIL-STD-1835 and as follows:

Outline letter	Descriptive designator	Terminals	Package style
X	See figure 1	32	Co-fired ceramic SOJ
Y	See figure 1	32	Co-fired ceramic dual-in-line

1.2.5 Lead finish. The lead finish shall be as specified in MIL-PRF-38534.

1.3 Absolute maximum ratings. 1/

Supply voltage range (V_{CC})	-0.6 V dc to +6.25 V dc
Signal voltage range (V_G)	-0.6 V dc to +6.25 V dc
Power dissipation (P_D)	0.44W Max.
Storage temperature range	-65°C to +150°C
Lead temperature (soldering, 10 seconds)	+300°C
Data retention	10 years minimum
Endurance (write/erase cycles)	10,000 cycles minimum
Voltage on OE and A9	-0.6 V dc to +13.5 V dc

1.4 Recommended operating conditions.

Supply voltage range (V_{CC})	+4.5 V dc to +5.5 V dc
Input low voltage range (V_{IL})	-0.3 V dc to +0.8 V dc
Input high voltage range (V_{IH})	+2.0 V dc to V_{CC} + 0.3 V dc
Case operating temperature range (T_C)	-55°C to +125°C

2. APPLICABLE DOCUMENTS

2.1 Government specification, standards, and handbook. The following specification, standards, and handbook form a part of this drawing to the extent specified herein. Unless otherwise specified, the issues of these documents are those listed in the issue of the Department of Defense Index of Specifications and Standards (DoDISS) and supplement thereto, cited in the solitation.

SPECIFICATION

DEPARTMENT OF DEFENSE

MIL-PRF-38534 - Hybrid Microcircuits, General Specification for.

STANDARDS

DEPARTMENT OF DEFENSE

MIL-STD-883 - Test Methods and Procedures for Microelectronics.
MIL-STD-973 - Configuration Management.
MIL-STD-1835 - Microcircuit Case Outlines.

HANDBOOK

DEPARTMENT OF DEFENSE

MIL-HDBK-780 - Standard Microcircuit Drawings.

(Unless otherwise indicated, copies of the specification, standards, and handbook are available from the Standardization Document Order Desk, 700 Robbins Avenue, Building 4D, Philadelphia, PA 19111-5094.)

2.2 Order of precedence. In the event of a conflict between the text of this drawing and the references cited herein, the text of this drawing takes precedence. Nothing in this document, however, supersedes applicable laws and regulations unless a specific exemption has been obtained.

1/ Stresses above the absolute maximum rating may cause permanent damage to the device. Extended operation at the maximum levels may degrade performance and affect reliability.

3. REQUIREMENTS

3.1 Item requirements. The individual item performance requirements for device classes D, E, G, H, and K shall be in accordance with MIL-PRF-38534. Compliance with MIL-PRF-38534 may include the performance of all tests herein or as designated in the device manufacturer's Quality Management (QM) plan or as designated for the applicable device class. Therefore, the tests and inspections herein may not be performed for the applicable device class (see MIL-PRF-38534). Furthermore, the manufacturers may take exceptions or use alternate methods to the tests and inspections herein and not perform them. However, the performance requirements as defined in MIL-PRF-38534 shall be met for the applicable device class.

3.2 Design, construction, and physical dimensions. The design, construction, and physical dimensions shall be as specified in MIL-PRF-38534 and herein.

3.2.1 Case outline(s). The case outline(s) shall be in accordance with 1.2.4 herein and figure 1.

3.2.2 Terminal connections. The terminal connections shall be as specified on figure 2.

3.2.3 Truth table(s). The truth table(s) shall be as specified on figure 3.

3.2.4 Timing diagram(s). The timing diagram(s) shall be as specified on figure 4, 5, 6, and 7.

3.2.5 Block diagram(s). The block diagram(s) shall be as specified on figure 8.

3.2.6 Output load circuit. The output load circuit shall be as specified on figure 9.

3.3 Electrical performance characteristics. Unless otherwise specified herein, the electrical performance characteristics are as specified in table I and shall apply over the full specified operating temperature range.

3.4 Electrical test requirements. The electrical test requirements shall be the subgroups specified in table II. The electrical tests for each subgroup are defined in table I.

3.5 Programming procedure. The programming procedure shall be as specified by the manufacturer and shall be available upon request.

3.6 Marking of Device(s). Marking of device(s) shall be in accordance with MIL-PRF-38534. The device shall be marked with the PIN listed in 1.2 herein. In addition, the manufacturer's vendor similar PIN may also be marked as listed in QML-38534.

3.7 Data. In addition to the general performance requirements of MIL-PRF-38534, the manufacturer of the device described herein shall maintain the electrical test data (variables format) from the initial quality conformance inspection group A lot sample, for each device type listed herein. Also, the data should include a summary of all parameters manually tested, and for those which, if any, are guaranteed. This data shall be maintained under document revision level control by the manufacturer and be made available to the preparing activity (DSCC-VA) upon request.

3.8 Certificate of compliance. A certificate of compliance shall be required from a manufacturer in order to supply to this drawing. The certificate of compliance (original copy) submitted to DSCC-VA shall affirm that the manufacturer's product meets the performance requirements of MIL-PRF-38534 and herein.

3.9 Certificate of conformance. A certificate of conformance as required in MIL-PRF-38534 shall be provided with each lot of microcircuits delivered to this drawing.

3.10 Endurance. A reprogrammability test shall be completed as part of the vendor's reliability monitors. This reprogrammability test shall be done for the initial characterization and after any design process changes which may affect the reprogrammability of the device. The methods and procedures may be vendor specific, but shall guarantee the number of program/erase cycles listed in section 1.3 herein over the full military temperature range. The vendor's procedure shall be kept under document control and shall be made available upon request of the acquiring or preparing activity.

3.11 Data retention. A data retention stress test shall be completed as part of the vendor's reliability monitors. This test shall be done for initial characterization and after any design process change which may affect data retention. The methods and procedures may be vendor specific, but shall guarantee the number of years listed in section 1.3 herein over the full military temperature range. The vendor's procedure shall be kept under document control and shall be made available upon request of the acquiring or preparing activity.

TABLE I. Electrical performance characteristics.

Test	Symbol	Conditions 1/ 2/ $-55°C \le T_C \le +125°C$ unless otherwise specified	Group A subgroups	Device type	Limits		Unit
					Min	Max	
DC parameters							
Input leakage current	I_{LI}	V_{CC} = 5.5 V dc, V_{IN} = GND or V_{CC}	1,2,3	All		10	μA
Output leakage current	I_{LO}	$\overline{CS} = V_{IH}$, $\overline{OE} = V_{IH}$, V_{OUT} = GND or V_{CC}	1,2,3	All		10	μA
Supply current	I_{CC}	$\overline{CS} = V_{IL}$, $\overline{OE} = V_{IH}$, f = 5 MHz, V_{CC} = 5.5 V dc	1,2,3	All		80	mA
Standby current	I_{SB}	$\overline{CS} = V_{IH}$, $\overline{OE} = V_{IH}$, f = 5 MHz, V_{CC} = 5.5 V dc	1,2,3	All		0.625	mA
Input low level	V_{IL}		1,2,3	All		0.8	V
Input high level	V_{IH}		1,2,3	All	2.0		V
Output low voltage	V_{OL}	V_{CC} = 4.5 V, I_{OL} = 2.1 mA	1,2,3	All		0.45	V
Output high voltage	V_{OH}	V_{CC} = 4.5 V, I_{OH} = -400 μA	1,2,3	All	2.4		V
Dynamic characteristics							
Input capacitance	C_{AD}	$V_{I/O}$ = 0 V, f = 1.0 MHz T_A = +25° C	4	All		20	pF
Output capacitance	C_{OE}	V_{IN} = 0 V, f = 1.0 MHz T_A = +25° C	4	All		20	pF
Functional testing							
Functional tests		See 4.3.1c	7,8A,8B	All			

See footnotes at end of table.

TABLE I. Electrical performance characteristics - Continued.

Test	Symbol	Conditions 1/ 2/ -55°C ≤ T_C ≤ +125°C unless otherwise specified	Group A subgroups	Device type	Limits		Unit
					Min	Max	
Read cycle AC timing characteristics							
Read cycle time	t_{RC}	See figure 4	9,10,11	01 02 03 04 05 06	300 250 200 150 140 120		ns
Address access time	t_{ACC}	See figure 4	9,10,11	01 02 03 04 05 06		300 250 200 150 140 120	ns
Chip select access time	t_{ACS}	See figure 4	9,10,11	01 02 03 04 05 06		300 250 200 150 140 120	ns
Output enable to output valid	t_{OE}	See figure 4	9,10,11	01 02 03,04,05 06		125 100 85 50	ns
Chip select to output in high Z	t_{DF}	See figure 4	9,10,11	All		70	ns
Output enable high to output in high Z	t_{DF}	See figure 4	9,10,11	All		70	ns
Output hold from Address change, OE or CS, whichever is first	t_{OH}	See figure 4	9,10,11	All	0		ns
Write AC timing characteristics							
Write Cycle time	t_{WC}	See figure 5	9,10,11	All		10	ms
Address setup time	t_{AS}	See figure 5	9,10,11	All	10		ns
Write Pulse Width (WE or CS)	t_{WP}	See figure 5	9,10,11	All	150		ns

See footnotes at end of table.

TABLE I. Electrical performance characteristics - Continued.

Test	Symbol	Conditions 1/ 2/ -55°C ≤ T_C ≤ +125°C unless otherwise specified	Group A subgroups	Device type	Limits		Unit
					Min	Max	
Write AC timing characteristics - continued.							
Address hold time	t_{AH}	See figure 5	9,10,11	All	100		ns
Data hold time	t_{DH}	See figure 5	9,10,11	All	10		ns
Chip select hold time	t_{CH}	See figure 5	9,10,11	All	0		ns
Data setup time	t_{DS}	See figure 5	9,10,11	All	100		ns
Output enable setup time	t_{OES}	See figure 5	9,10,11	All	10		ns
Output enable hold time	t_{OEH}	See figure 5	9,10,11	All	10		ns
Write pulse width high	t_{WPH}	See figure 5	9,10,11	All	50		ns
Page mode write AC characteristics							
Write cycle time	t_{WC}	See figure 6	9,10,11	All		10	ms
Data setup time	t_{DS}	See figure 6	9,10,11	All	100		ns
Data hold time	t_{DH}	See figure 6	9,10,11	All	10		ns
Write pulse width	t_{WP}	See figure 6	9,10,11	All	150		ns
Byte load cycle time	t_{BLC}	See figure 6	9,10,11	All		150	μs
Write pulse width high	t_{WPH}	See figure 6	9,10,11	All	50		ns

See footnotes at end of table.

TABLE I. Electrical performance characteristics - Continued.

Test	Symbol	Conditions 1/ 2/ $-55°C \le T_C \le +125°C$ unless otherwise specified	Group A subgroups	Device type	Limits		Unit
					Min	Max	
Data polling AC characteristics							
Data hold time	t_{DH}	See figure 7	9,10,11	All	10		ns
Output enable hold time	t_{OEH}	See figure 7	9,10,11	All	10		ns
Output enable to output valid	t_{OE}	See figure 7	9,10,11	All		100	ns
Write recovery time	t_{WR}	See figure 7	9,10,11	All	0		ns

1/ Unless otherwise specified, $+4.5 V \le V_{CC} \le +5.5 V$ and $V_{SS} = 0 V$.
2/ Unless otherwise specified, the DC test conditions are as follows:
Input pulse levels: $V_{IH} = V_{CC} - 0.3 V$ and $V_{IL} = 0.3V$.

Unless otherwise specified, the AC test conditions are as follows:
Input pulse levels: $V_{IL} = 0 V$ and $V_{IH} = 3.0 V$.
Input rise and fall times: 5 nanoseconds
Input and output timing reference levels: 1.5 V
3/ Parameters shall be tested as part of device characterization and after design and process changes. Parameters shall be to the limits specified in table 1 for all lots not specifically tested.

Case outline X.

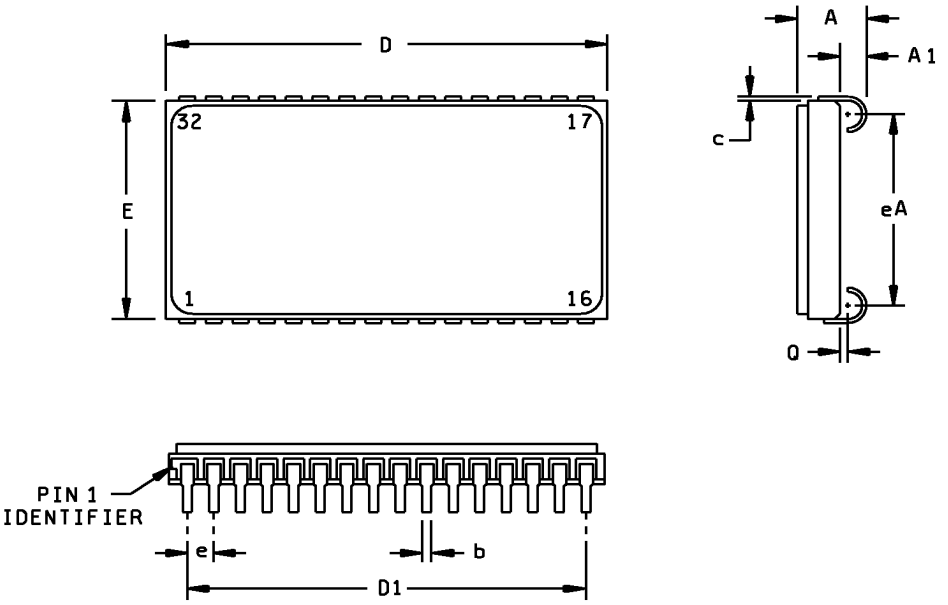

Symbol	Millimeters		Inches	
	Min	Max	Min	Max
A	3.80	4.20	.150	.166
A1	0.13	0.63	.005	.025
b	0.41	0.51	.016	.020
c	0.15	0.25	.006	.010
D	20.85	21.35	.820	.840
D1	18.85	19.35	.740	.760
E	11.10	11.56	.437	.455
e	1.27 BSC		.050 BSC	
eA	9.30	9.80	.366	.386
Q	0.13	0.63	.005	.025

NOTES:
1. The U.S. preferred system of measurement is the metric SI. This item was designed using inch-pound units of measurement. In case of problems involving conflicts between the metric and inch-pound units, the inch-pound units shall rule.
2. Pin numbers are for reference only.

FIGURE 1. Case outline(s).

Case outline Y.

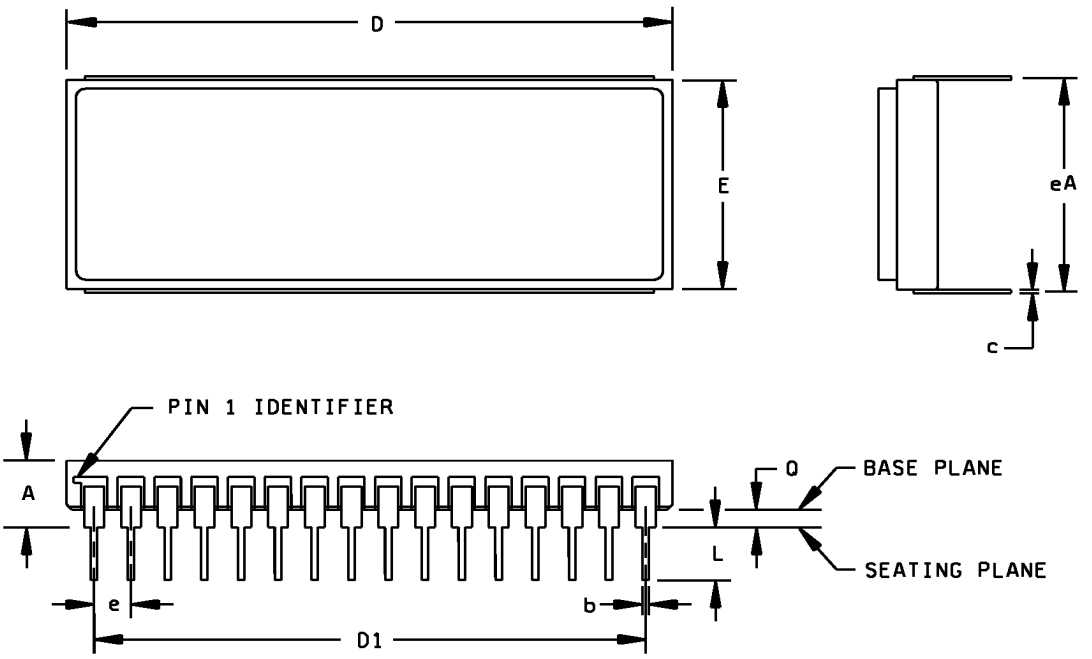

Symbol	Millimeters		Inches	
	Min	Max	Min	Max
A	3.56	5.13	.144	.200
b	0.41	0.51	.016	.025
c	0.23	0.31	.009	.020
D	42.01	42.82	1.654	.010
D1	37.90	38.30	1.492	.840
E	14.73	15.34	.580	.760
e	2.54 BSC		.100 BSC	
eA	14.99	15.50	.590	.610
L	3.18	4.90	.125	.193
Q	0.48	1.19	.019	.047

NOTES:
1. The U.S. preferred system of measurement is the metric SI. This item was designed using inch-pound units of measurement. In case of problems involving conflicts between the metric and inch-pound units, the inch-pound units shall rule.
2. Pin numbers are for reference only.

FIGURE 1. Case outline(s) - continued.

Device type	All	Device type	All	Device type	All	Device type	All
Case outlines	X and Y	Case outlines	X and Y	Case Outlines	X and Y	Case outlines	X and Y
Terminal number	Terminal symbol	Terminal number	Terminal symbol	Terminal number	Terminal symbol	Terminal number	Terminal symbol
1	NC	9	A3	17	I/O3	25	A11
2	A16	10	A2	18	I/O4	26	A9
3	A15	11	A1	19	I/O5	27	A8
4	A12	12	A0	20	I/O6	28	A13
5	A7	13	I/O0	21	I/O7	29	A14
6	A6	14	I/O1	22	$\overline{CS}$	30	NC
7	A5	15	I/O2	23	A10	31	$\overline{WE}$
8	A4	16	GND	24	$\overline{OE}$	32	V_{CC}

FIGURE 2. Terminal connections

$\overline{CS}$	$\overline{OE}$	$\overline{WE}$	Mode	Data I/O
H	X	X	Standby	High Z
L	L	H	Read	Data Out
L	H	L	Write	Data In
X	H	X	Out Disable	High Z\Data Out
X	X	H	Write Inhibit	
X	L	X	Write Inhibit	

NOTES:
1. H = V_{IH} = High Logic Level
2. L = V_{IL} = Low Logic Level
3. X = Do no care (either high or low)
4. High Z = High Impedance State

FIGURE 3. Truth Table.

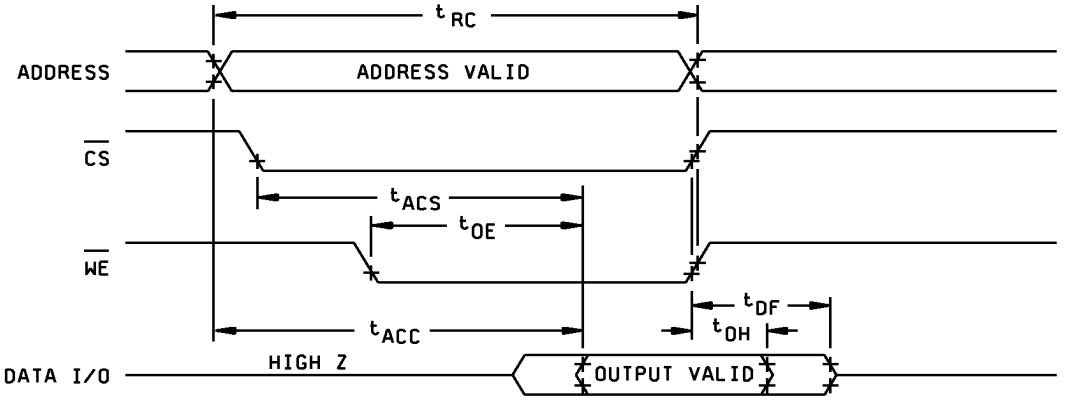

FIGURE 4. Read cycle timing diagram.

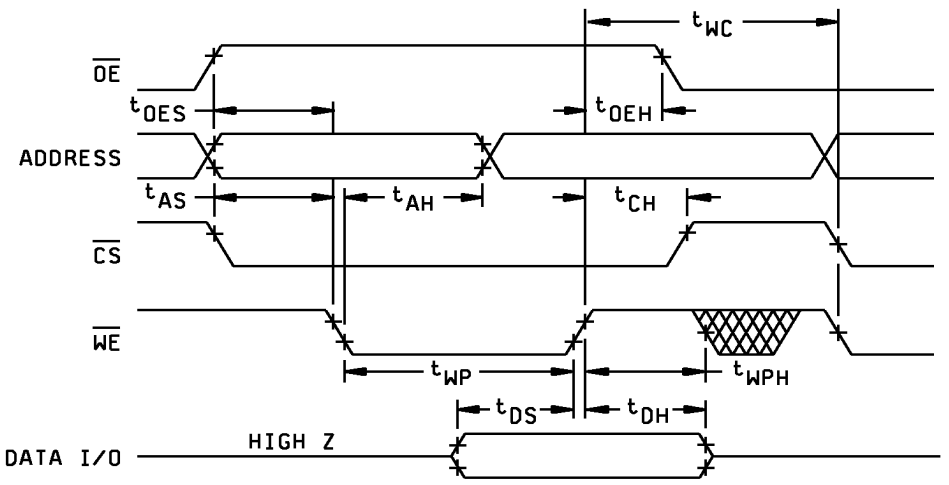

FIGURE 5. Write cycle timing diagram - $\overline{WE}$ controlled.

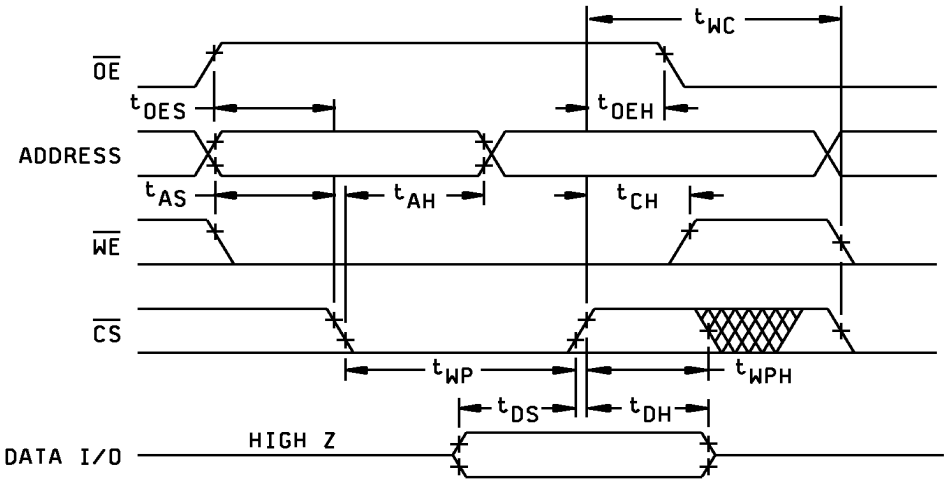

FIGURE 5. Write cycle timing diagram - $\overline{CS}$ controlled.

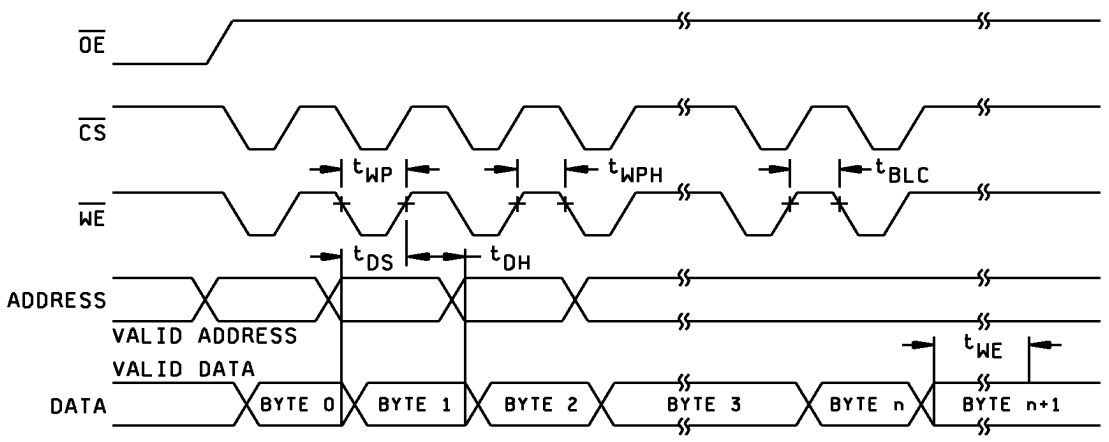

FIGURE 6. Page write timing diagram.

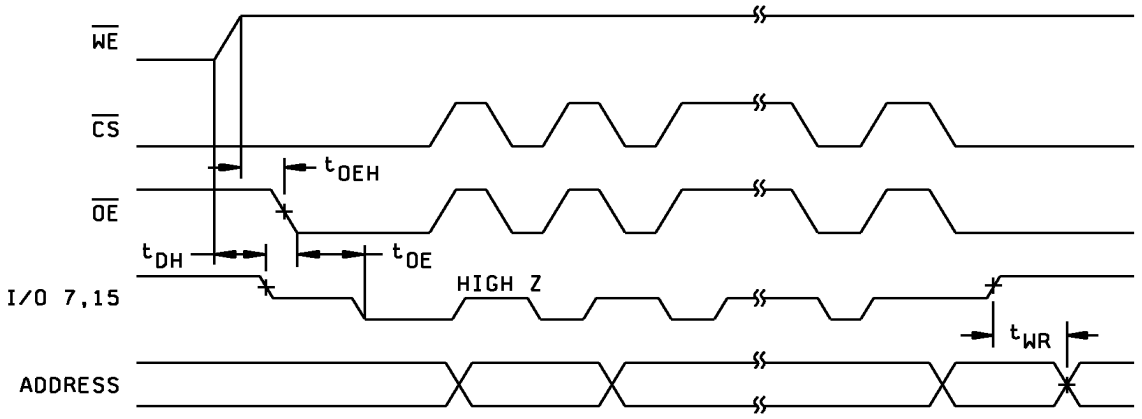

FIGURE 7. Data polling timing diagram.

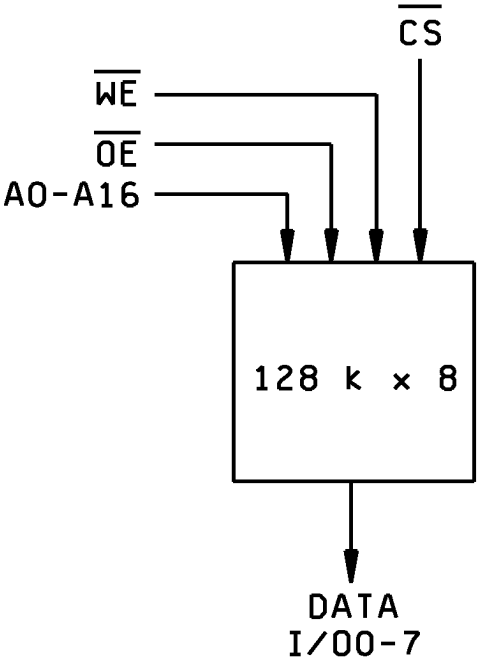

FIGURE 8. Block diagram.

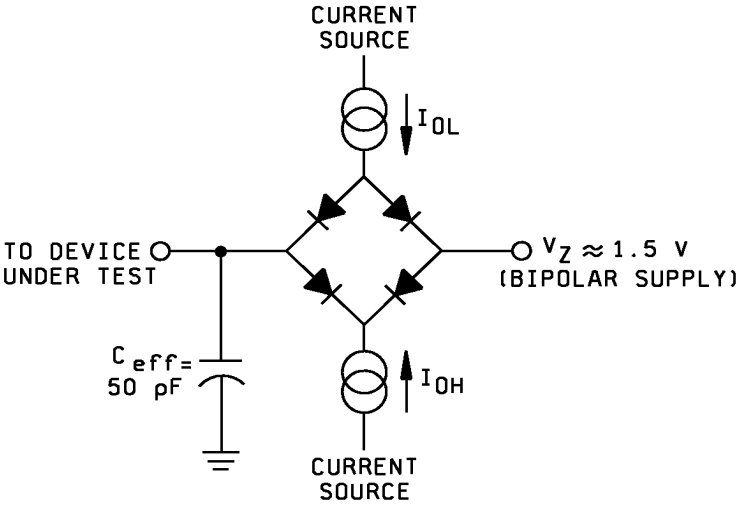

Parameter	Typ.	Unit
Input Pulse Level	0 -3.0	V
Input Rise and Fall	5	ns
Input and Output Reference Level	1.5	V
Output Load Capacitance	50	pF

NOTES:
1. V_Z is programmable from +2 V to +7 V.
2. I_{OL} and I_{OH} are programmable from 0 to 16 mA.
3. Tester impedance is Z_0 = 75 ohms.
4. V_Z is typically the midpoint of V_{OH} and V_{OH}.
5. I_{OL} and I_{OH} are adjusted to simulate a typical resistive load circuit.
6. ATE tester includes jig capacitance.

FIGURE 9. Output load circuit.

TABLE II. Electrical test requirements.

MIL-PRF-38534 test requirements	Subgroups (in accordance with MIL-PRF-38534,group A test table)
Interim electrical parameters	1,4,7,9
Final electrical test parameters	1*,2,3,4,7,8A,8B,9,10,11
Group A test requirements	1,2,3,4,7,8A,8B,9,10,11
Group C end-point electrical parameters	1,2,3,4,7,8A,8B,9,10,11
MIL-STD-883, group E end-point electrical parameters for RHA devices	Subgroups ** (in accordance with method 5005, group A test table)

* PDA applies to subgroup 1.
** When applicable to this standard microcircuit drawing, the subgroups shall be defined.

4. QUALITY ASSURANCE PROVISIONS

4.1 Sampling and inspection. Sampling and inspection procedures shall be in accordance with MIL-PRF-38534 or as modified in the device manufacturer's Quality Management (QM) plan. The modification in the QM plan shall not affect the form, fit, or function as described herein. .

4.2 Screening. Screening shall be in accordance with MIL-PRF-38534. The following additional criteria shall apply:

a. Burn-in test, method 1015 of MIL-STD-883.

(1) Test condition B. The test circuit shall be maintained by the manufacturer under document revision level control and shall be made available to either DSCC-VA or the acquiring activity upon request. Also, the test circuit shall specify the inputs, outputs, biases, and power dissipation, as applicable, in accordance with the intent specified in test method 1015 of MIL-STD-883.

(2) T_A as specified in accordance with table I of method 1015 of MIL-STD-883.

b. Interim and final electrical test parameters shall be as specified in table II herein, except interim electrical parameter tests prior to burn-in are optional at the discretion of the manufacturer.

4.3 Conformance and periodic inspections. Conformance inspection (CI) and periodic inspection (PI) shall be in accordance with MIL-PRF-38534 and as specified herein.

4.3.1 Group A inspection (CI). Group A inspection shall be in accordance with MIL-PRF-38534 and as follows:

a. Tests shall be as specified in table II herein.

b. Subgroups 5 and 6 shall be omitted.

c. Subgroups 7 and 8 shall include verification of the truth table.

4.3.2 Group B inspection (PI). Group B inspection shall be in accordance with MIL-PRF-38534.

4.3.3 Group C inspection (PI). Group C inspection shall be in accordance with MIL-PRF-38534 and as follows:

a. End-point electrical parameters shall be as specified in table II herein.

b. Steady-state life test, method 1005 of MIL-STD-883.

(1) Test condition B. The test circuit shall be maintained by the manufacturer under document revision level control and shall be made available to either DSCC-VA or the acquiring activity upon request. Also, the test circuit shall specify the inputs, outputs, biases, and power dissipation, as applicable, in accordance with the intent specified in test method 1005 of MIL-STD-883.

(2) T_A as specified in accordance with table I of method 1005 of MIL-STD-883.

(3) Test duration: 1,000 hours, except as permitted by method 1005 of MIL-STD-883.

4.3.4 Group D inspection (PI). Group D inspection shall be in accordance with MIL-PRF-38534.

4.3.5 Group E inspection. Group E inspection is required only for parts intended to be marked as radiation hardness assured (see 3.5 herein). RHA levels shall be M, D, R, and H. RHA quality conformance inspection sample tests shall be performed at the RHA level specified in the acquisition document.

a. RHA tests for levels M, D, R, and H shall be performed through each level to determine at what levels the devices meet the RHA requirements. These RHA tests shall be performed for initial qualification and after design or process changes which may affect the RHA performance of the device.

b. End-point electrical parameters shall be as specified in table II herein.

c. Prior to total dose irradiation, each selected sample shall be assembled in its qualified package. It shall pass the specified group A electrical parameters in table I for subgroups specified in table II herein.

d. The devices shall be subjected to radiation hardness assured tests as specified in MIL-PRF-38534 for RHA level being tested, and meet the postirradiation end-point electrical parameter limits as defined in table I at $T_A = +25°C \pm 5$ percent, after exposure.

e. Prior to and during total dose irradiation testing, the devices shall be biased to establish a worst case condition as specified in the radiation exposure circuit.

f. For device classes H and K, subgroups 1 and 2 in table V, method 5005 of MIL-STD-883 shall be tested as appropriate for device construction.

g. When specified in the purchase order or contract, a copy of the RHA delta limits shall be supplied.

5. PACKAGING

5.1 Packaging requirements. The requirements for packaging shall be in accordance with MIL-PRF-38534.

6. NOTES

6.1 Intended use. Microcircuits conforming to this drawing are intended for use for Government microcircuit applications (original equipment), design applications, and logistics purposes.

6.2 Replaceability. Microcircuits covered by this drawing will replace the same generic device covered by a contractor-prepared specification or drawing.

6.3 Configuration control of SMD's. All proposed changes to existing SMD's will be coordinated with the users of record for the individual documents. This coordination will be accomplished in accordance with MIL-STD-973 using DD Form 1692, Engineering Change Proposal.

6.4 Record of users. Military and industrial users shall inform Defense Supply Center Columbus when a system application requires configuration control and the applicable SMD. DSCC will maintain a record of users and this list will be used for coordination and distribution of changes to the drawings. Users of drawings covering microelectronic devices (FSC 5962) should contact DSCC-VA, telephone (614) 692-0526.

6.5 Comments. Comments on this drawing should be directed to DSCC-VA, Columbus, Ohio 43216-5000, or telephone (614) 692-0512.

6.6 Sources of supply. Sources of supply are listed in QML-38534. The vendors listed in QML-38534 have submitted a certificate of compliance (see 3.7 herein) to DSCC-VA and have agreed to this drawing.

STANDARD MICROCIRCUIT DRAWING SOURCE APPROVAL BULLETIN

DATE: 99-03-10

Approved sources of supply for SMD 5962-96796 are listed below for immediate acquisition only and shall be added to QML-38534 during the next revision. QML-38534 will be revised to include the addition or deletion of sources. The vendors listed below have agreed to this drawing and a certificate of compliance has been submitted to and accepted by DSCC-VA. This bulletin is superseded by the next dated revision of QML-38534.

Standard microcircuit drawing PIN 1/	Vendor CAGE number	Vendor similar PIN 2/
5962-9679601HXA	54230	WME128K8-300DEQ
5962-9679601HXC	54230	WME128K8-300DEQ
5962-9679601HYA	54230	WME128K8-300CQ
5962-9679601HYC	54230	WME128K8-300CQ
5962-9679602HXA	54230	WME128K8-250DEQ
5962-9679602HXC	54230	WME128K8-250DEQ
5962-9679602HYA	54230	WME128K8-250CQ
5962-9679602HYC	54230	WME128K8-250CQ
5962-9679603HXA	54230	WME128K8-200DEQ
5962-9679603HXC	54230	WME128K8-200DEQ
5962-9679603HYA	54230	WME128K8-200CQ
5962-9679603HYC	54230	WME128K8-200CQ
5962-9679604HXA	54230	WME128K8-150DEQ
5962-9679604HXC	54230	WME128K8-150DEQ
5962-9679604HYA	54230	WME128K8-150CQ
5962-9679604HYC	54230	WME128K8-150CQ
5962-9679605HXA	54230	WME128K8-140DEQ
5962-9679605HXC	54230	WME128K8-140DEQ
5962-9679605HYA	54230	WME128K8-140CQ
5962-9679605HYC	54230	WME128K8-140CQ
5962-9679606HXA	54230	WME128K8-120DEQ
5962-9679706HXC	54230	WME128K8-120DEQ
5962-9679606HYA	54230	WME128K8-120CQ
5962-9679606HYC	54230	WME128K8-120CQ

1/ The lead finish shown for each PIN representing a hermetic package is the most readily available from the manufacturer listed for that part. If the desired lead finish is not listed contact the vendor to determines its availibility.

2/ Caution. Do not use this number for item acquisition. Items acquired to this number may not satisfy the performance requirements of this drawing.

Vendor CAGE number	Vendor name and address
54230	White Microelectronics 3601 East University Drive Phoenix, Az 85034

The information contained herein is disseminated for convenience only and the Government assumes no liability whatsoever for any inaccuracies in this information bulletin.