PART CHARACTERISTICS

NUMBER OF POSITION	ASSEMBLY ITEM NUMBER	MATERIAL
02	43025-0200	"B"
04	43025-0400	
06	43025-0600	
08	43025-0800	
10	43025-1000	
12	43025-1200	"A"
14	43025-1400	
16	43025-1600	
18	43025-1800	
20	43025-2000	
22	43025-2200	
24	43025-2400	

CKT. NO.	DIM. "A"	DIM. "B"
2	.152/(3.86)	N/A
4	.270/(6.85)	.118/(3.00)
6	.388/(9.85)	.236/(6.00)
8	.506/(12.85)	.354/(9.00)
10	.624/(15.85)	.472/(12.00)
12	.742/(18.85)	.591/(15.00)
14	.860/(21.85)	.709/(18.00)
16	.978/(24.85)	.827/(21.00)
18	1.096/(27.85)	.945/(24.00)
20	1.215/(30.85)	1.063/(27.00)
22	1.333/(33.85)	1.181/(30.00)
24	1.451/(36.85)	1.299/(33.00)

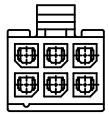

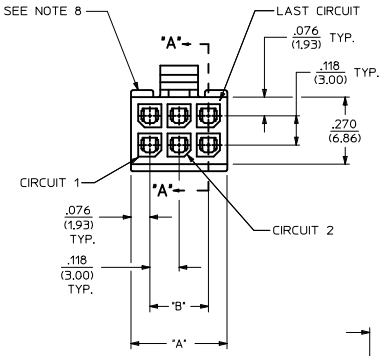

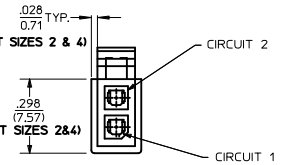

2 CIRCUIT HOUSING

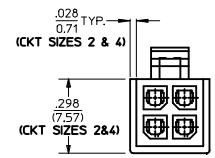

4 CIRCUIT PULL TAB GEOMETRY

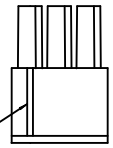

HOUSING SHOWN WITH OPTIONAL FIRST CIRCUIT IDENTIFIER RIB

(SEE NOTE #11)

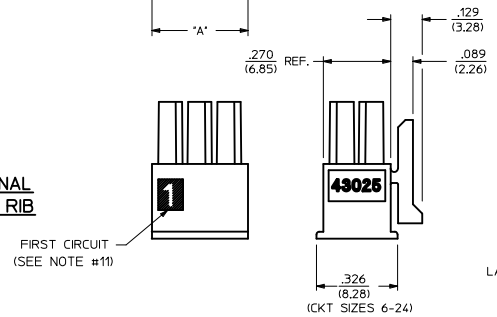

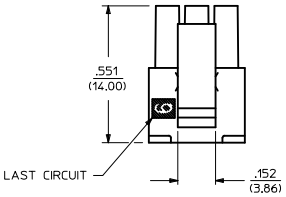

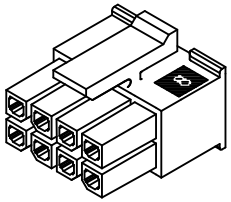

RECEPTACLE
ISO VIEW
(8 CIRCUIT SHOWN)

(SEE NOTE 9 FOR TESTING)

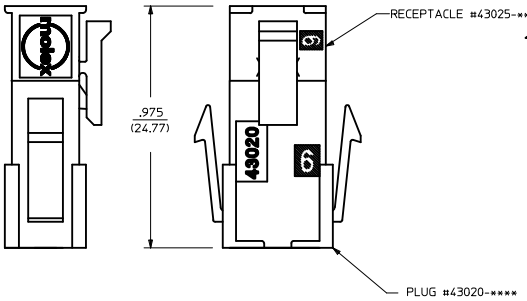

MATED MICRO-FIT CONNECTOR

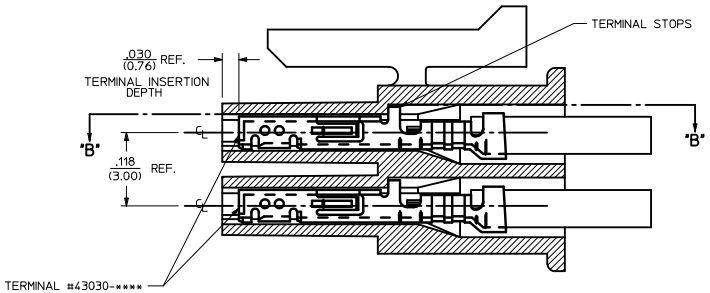

SECTION "A"-"A"
WITH TERMINAL
(SCALE 10:1)

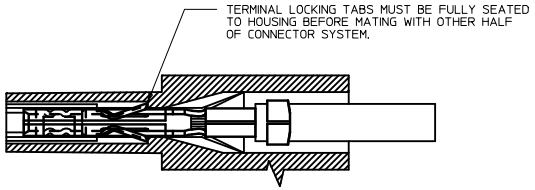

SECTION "B"-"B"
(SCALE 10:1)

NOTES:

1) HOUSING MATERIAL:
   "A" - UNFILLED POLYESTER, RATED U.L. 94V-0, COLOR IS BLACK.
   "B" - UNFILLED NYLON 6, RATED U.L. 94V-0, HALOGEN-FREE AND IEC 60335-1, 4TH EDITION GLOW WIRE CAPABLE, COLOR IS BLACK.
   * MATERIAL "B" PARTS ARE IDENTIFIED WITH A GREEN LABEL OR A GREEN DOT ON A WHITE LABEL. PART NUMBERS LISTED AS "B" MATERIAL BUT MANUFACTURED PRIOR TO 8/30/2010 OR NOT CONTAINING THIS "GREEN" IDENTIFICATION MAY BE MATERIAL "A".
2) FINISH: N/A
3) PRODUCT SPECIFICATION: PS-43045
4) PACKAGING SPECIFICATION: PK-43025-001
5) THIS RECEPTACLE MATES WITH 43020, 43045.
6) THIS RECEPTACLE TO BE USED WITH MOLEX FEMALE TERMINAL #43030-****. SEE SECTION "A"-"A" FOR TERMINAL ORIENTATION IN HOUSING.
7) FOR OVERMOLDING PARAMETERS SEE ENGINEERING SPECIFICATION #SDES-43025-1000.
8) TOP PULL TABS ARE NOT AVAILABLE ON 2 AND 4 CIRCUIT PARTS.
9) MOLEX RECOMMENDS THE USE OF MICRO-FIT TEST PLUG, SERIES NO. 44242-**** WHENEVER TESTING IS PERFORMED. TEST PLUGS MUST NOT BE USED FOR MAKE OR BREAK UNDER LOAD. MOLEX DOES NOT RECOMMEND USING STANDARD MATING COMPONENTS FOR HARNESS TESTING PURPOSES.
10) SOME HOUSINGS MAY HAVE A SMALL GATE BLEMISH NEAR THE GATE THAT DOES NOT AFFECT FUNCTIONALITY.
11) HOUSINGS MAY HAVE EITHER AN IDENTIFIER RIB OR "1" SYMBOL ENGRAVE TO INDICATE CIRCUIT #1.
12) THIS PART CONFORMS TO CLASS 'B' REQUIREMENTS OF COSMETIC SPECIFICATION PS-45499-002.

REV	DESCRIPTION
N	ADD NYLON MATL EC NO: UCP2011-0996 2010/09/30 DRWN:GMARANANI 2010/09/30 CHKD:SSOUSEK APPR:FSMITH

QUALITY SYMBOLS: ⊽ =0, ⊽ =0, ⊽ =0

GENERAL TOLERANCES (UNLESS SPECIFIED)

	mm	INCH
4 PLACES	± ---	± ---
3 PLACES	± ---	± .010
2 PLACES	± 0.25	± .014
1 PLACE	± 0.35	± ---
ANGULAR ±1/2°		

DRAFT WHERE APPLICABLE MUST REMAIN WITHIN DIMENSIONS

DIMENSION STYLE: IN/MM
SCALE: 4:1
DESIGN UNITS: METRIC
THIRD ANGLE PROJECTION

		DATE
DRAWN BY	A.F.G.	1993/01/14
CHECKED BY	B.A.P.	1993/01/14
APPROVED BY	R.A.S	1993/01/14

TITLE: MICRO-FIT (3.0) 2 THRU 24 CIRCUIT RECEPTACLE

molex MOLEX INCORPORATED

MATERIAL NO.: SEE CHART
DOCUMENT NO.: SDA-43025-****
SHEET NO.: 1 OF 1
SIZE: D

THIS DRAWING CONTAINS INFORMATION THAT IS PROPRIETARY TO MOLEX INCORPORATED AND SHOULD NOT BE USED WITHOUT WRITTEN PERMISSION