ZPT VACUUM PADS
VERTICAL ENTRY WITHOUT BUFFER

TECHNICAL SPECIFICATIONS

Vacuum entry	Vertical type
Mounting	Use connection for vacuum entry

Pad type	Flat type	Flat with rib	Deep type
Pad dia. (mm)	2, 4, 6, 8, 10, 13, 16, 20, 25, 32, 40, 50	10, 13, 16, 20, 25, 32, 40, 50	10, 16, 25, 40
Material (colour)	See "How to Order"		
Hardness (shore)	NBR (50°) Silicon (40°) Urethane-flourine (60°)		

DIMENSIONS
PAD DIAMETERS Ø2, Ø4, Ø6, Ø8

Flat type

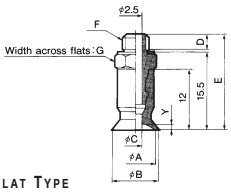

FLAT TYPE

Model	ØA	ØB	ØC	F:M5x0.8			F:M6x1			Y
				D	E	G	D	E	G	
ZPT02U	2	2.6	1.2	3	19	7	4	20	8	0.8
ZPT04U	4	4.8	1.6							
ZPT06U	6	7	2.5							
ZPT08U	8	9								1

DIMENSIONS
PAD DIAMETERS Ø10, Ø13, Ø16

Flat type

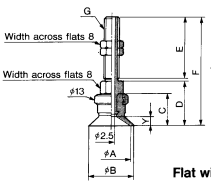

Deep type／ZPT10D·16D only

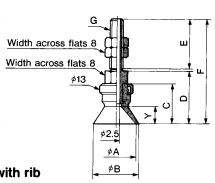

Flat with rib

FLAT TYPE - FLAT WITH RIB

Model	ØA	ØB	C	D	G:M5x0.8		G:M6x1		Y	
					E	F	E	F	Flat	Flat with rib
ZPT10 U/C	10	12	12	17	20	38	25	43	3	1.7
ZPT13 U/C	13	15	12	17	20	38	25	43	3	1.8
ZPT16 U/C	16	18	12.5	17.5	20	38.5	25	43.5	3.5	1.2

DEEP TYPE

Model	ØA	ØB	C	D	G:M5x0.8		G:M6x1		Y
					E	F	E	F	
ZPT10D	10	12	15	20	20	41	25	46	6
ZPT16D	16	18	16	21	20	42	25	47	7

FOR FURTHER TECHNICAL DETAILS ON THIS PRODUCT REQUEST CATALOGUE REFERENCE E807

DIMENSIONS
PAD DIAMETERS Ø20, Ø25, Ø32

Flat type

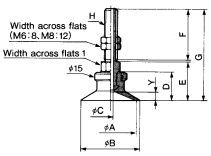

Deep type／ZPT25D only

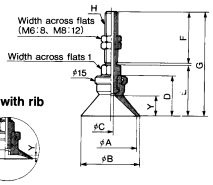

Flat with rib

FLAT TYPE - FLAT WITH RIB

Model	ØA	ØB	D	H : M6x1					H : M8x1					Y	
				ØC	E	F	G	I	ØC	E	F	G	I	Flat	Flat with rib
ZPT20 U/C	20	23	14	3	19	25	45	8	3.5	24	15	40	12	4	1.7
ZPT25 U/C	25	28	14	3	19	25	45	8	3.5	24	15	40	12	4	1.8
ZPT32 U/C	32	35	14.5	3	19.5	25	45	8	3.5	24.5	15	40.5	12	4.5	2.3

DEEP TYPE

Model	ØA	ØB	D	H:M6x1					H:M8x1					Y
				ØA	E	F	G	I	ØC	E	F	G	I	
ZPT25D	25	28	20	3	25.5	25	51	8	3.5	30.5	15	46	12	10

DIMENSIONS
PAD DIAMETERS Ø40, Ø50

Flat type

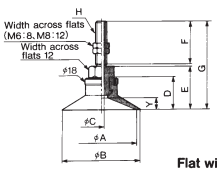

Deep type／ZPT40D only

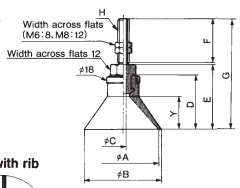

Flat with rib

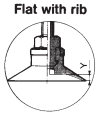

FLAT TYPE - FLAT WITH RIB

Model	ØA	ØB	D	E	H:M6x1			H:M8x1			Y	
					ØC	F	G	ØC	F	G	Flat	Flat with rib
ZPT40 U/C	40	43	18.5	24.5	3	15	50.5	4.5	15	40.5	6.5	3.3
ZPT50 U/C	50	53	19.5	25.5	3	15	51.5	4.5	15	41.5	7.5	3.8

DEEP TYPE

Model	ØA	ØB	D	E	H:M6x1			H:M6x1			Y
					ØC	F	G	ØC	F	G	
ZPT40D	40	43	29	35.5	3	25	61	4.5	15	51	17

HOW TO ORDER
SEE NEXT PAGE ☞

VACUUM PADS SERIES ZP

HOW TO ORDER
ZPT PAD VERTICAL TYPE WITHOUT BUFFER

ZPT ○○○—○

PAD DIAMETER
02 ...Ø2
04 ...Ø4
06 ...Ø6
08 ...Ø8
10 ...Ø10
13 ...Ø13
16 ...Ø16
20 ...Ø20
25 ...Ø25
32 ...Ø32
40 ...Ø40
50 ...Ø50

PAD MATERIAL
N .....Nitrile rubber black (standard)
S .....Silicon rubber white
U .....Urethane brown
F .....Fluorine rubber black + mark
GN ...Anti-static Nitrile rubber
GS ...Anti-static Silicon rubber

PAD TYPE
U .....Flat
C .....Flat with Rib (Not ø2,4,6,8)
D .....Deep (ø10,16,25,40)
B .....Bellows (Not ø2,4)

VACUUM ENTRY (ALSO MOUNTING THREAD DIA)

	Symbol	Thread dia.	Ø2~Ø8	Ø10~Ø16	Ø20~Ø32	Ø40•Ø50
Male thread	A5	M5X0.8	•	•		
	A6	M6X1	•	•	•	•
	A8	M8X1			•	•

Ask SMC Regional Offices for female thread versions also available

STOCKED PRODUCTS
FOR A LIST OF STOCKED PRODUCTS, PLEASE SEE THE CURRENT SMC PRICE LIST

ZPT VACUUM PADS
VERTICAL ENTRY WITH BUFFER

TECHNICAL SPECIFICATIONS

Vacuum entry	Vertical type
Buffer type	Non-rotation type (K)
Buffer stroke	For Ø2~Ø8....6mm
	For Ø10~Ø50....10mm

Pad type	Flat type	Flat with rib	Deep type
Pad dia. (mm)	2, 4, 6, 8, 10, 13, 16, 20, 25, 32, 40, 50	10, 13, 16, 20, 25, 32, 40, 50	10, 16, 25, 40
Material (colour)	See "How to Order"		
Hardness (shore)	NBR (50°) Silicon (40°) Urethane-flourine (60°)		

SPRING FORCE (N)

Pad dia. (mm)	0 stroke	Stroke end
Ø2~Ø8	0.8	1.2
Ø10~Ø32	1	3
Ø40, Ø50	2	5

HOW TO ORDER
ZPT PAD VERTICAL TYPE WITH BUFFER

ZPT ○○N○—○—○

PAD DIAMETER
02 ...Ø2
04 ...Ø4
06 ...Ø6
08 ...Ø8
10 ...Ø10
13 ...Ø13
16 ...Ø16
20 ...Ø20
25 ...Ø25
32 ...Ø32
40 ...Ø40
50 ...Ø50

PAD TYPE
U .....Flat
C .....Flat with Rib (Not ø2,4,6,8)
D .....Deep (ø10,16,25,40)
B .....Bellows (Not ø2,4)

PAD MATERIAL
N .....Nitrile rubber (standard)
S .....Silicon rubber
U .....Urethane
F .....Fluorine rubber
GN ...Anti-static Nitrile rubber
GS ...Anti-static Silicon rubber

VACUUM ENTRY–MOUNTING

	Symbol	Thread dia.	Ø2~Ø8	Ø10~Ø32	Ø40~Ø50
Male thread	A8	M8X1	•		
	A10	M10X1		•	
	A14	M14X1			•

VACUUM ENTRY

	Symbol	Port size	Ø2~Ø8	Ø10~Ø32	Ø40~Ø50
One-touch tube fitting	04	Ø4 tube	•	•	
	06	Ø6 tube	•	•	•
	08	Ø8 tube			•

Ask SMC Regional Offices for female and Barb versions

BUFFER (NON-ROTATION TYPE)

Symbol	Stroke	Ø2~Ø8	Ø10~Ø32	Ø40~Ø50
K6	6mm	•		
K10	10mm		•	•

DIMENSIONS
SEE NEXT PAGE ☞

DIMENSIONS

ZPT WITH ONE TOUCH TUBE FITTING (BUFFER)

PAD DIAMETER: Ø2 • Ø4 • Ø6 • Ø8

Flat type

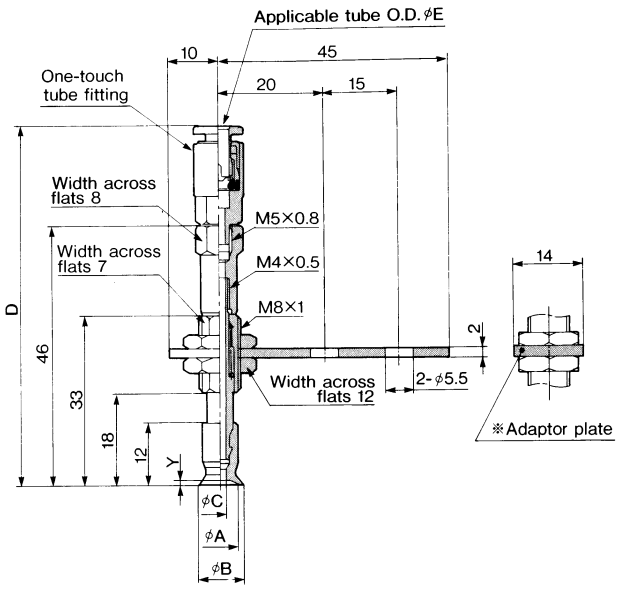

※Adaptor plate : Provided as standard

Flat type

Model	ϕA	ϕB	ϕC	E:4 D	E:6 D	Y
ZPT02U	2	2.6	1.2	66	66.5	0.8
ZPT04U	4	4.8	1.6	66	66.5	0.8
ZPT06U	6	7	2.5	66	66.5	0.8
ZPT08U	8	9	2.5	66	66.5	1

PAD DIAMETER: Ø10 • Ø13 • Ø16

Flat type

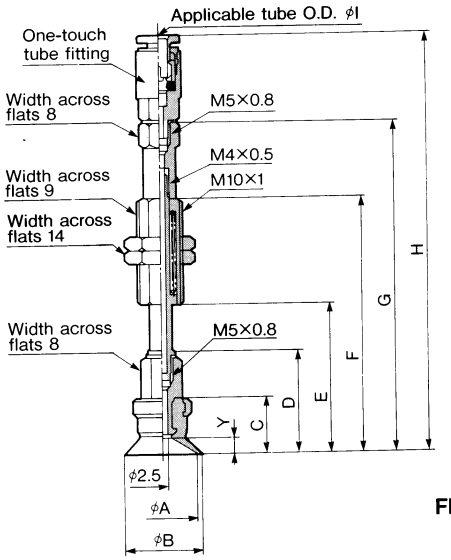

Flat with rib

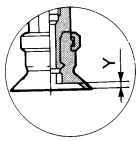

Deep type／ZPT10D·16D only

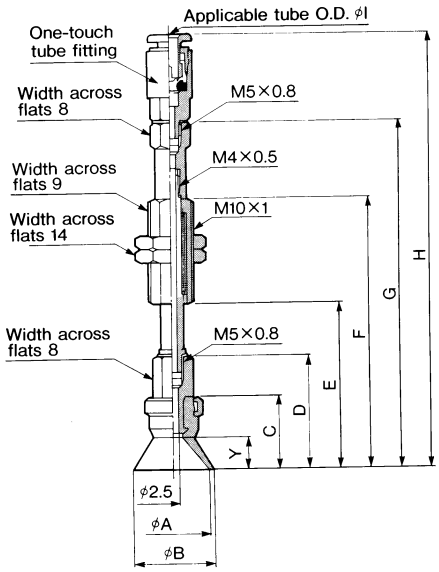

Weight List

(gf)

Model \ Pad type / Applicable tube	Flat type ϕ4	Flat type ϕ6	Flat type ϕ8	Flat with rib ϕ4	Flat with rib ϕ6	Flat with rib ϕ8	Deep type ϕ4	Deep type ϕ6	Deep type ϕ8
ZPT02 ~ ZPT08	29	30	—	—	—	—	—	—	—
ZPT10	30	30	—	30	30	—	30	30	—
ZPT13							—	—	—
ZPT16							30	30	—
ZPT20	32	32	—	32	32	—	—	—	—
ZPT25							33	33	—
ZPT32	33	33	—	33	33	—	—	—	—
ZPT400	—	105	110	—	105	110	—	105	110
ZPT50	—	105	115	—	105	115	—	—	—

Flat type · Flat with rib type

Model	ϕA	ϕB	C	D	E	F	G	I:4 H	I:6 H	Y Flat	Y Flat with rib
ZPT10U/C	10	12	12	21	32.5	55.5	68.5	88.5	89	3	1.7
ZPT13U/C	13	15	12	21	32.5	55.5	68.5	88.5	89	3	1.8
ZPT16U/C	16	18	12.5	21.5	33	56	69	89	89.5	3.5	1.2

Deep type

Model	ϕA	ϕB	C	D	E	F	G	I:4 H	I:6 H	Y
ZPT10D	10	12	15	24	35.5	58.5	71.5	91.5	92	6
ZPT16D	16	18	16	25	36.5	59.5	72.5	92.5	93	7

DIMENSIONS

ZPT WITH ONE TOUCH TUBE FITTING (BUFFER)

PAD DIAMETER: Ø20 • Ø25 • Ø32

Flat type

Model	ϕA	ϕB	C	D	E	F	G	I:4 H	I:6 H	Y Flat	Y Flat with rib
ZPT20 U/C	20	23	14	23	34.5	57.5	70.5	90.5	91	4	1.7
ZPT25 U/C	25	28	14	23	34.5	57.5	70.5	90.5	91	4	1.8
ZPT32 U/C	32	35	14.5	29	35	58	71	91	91.5	4.5	2.3

Deep type

Model	ϕA	ϕB	C	D	E	F	G	I:4 H	I:6 H	Y
ZPT25D	25	28	20	29	40.5	63.5	76.5	96.5	97	10

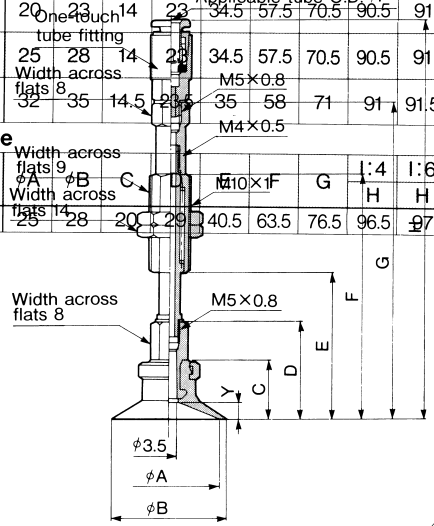

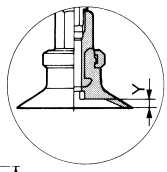

Deep type／ZPT25D only

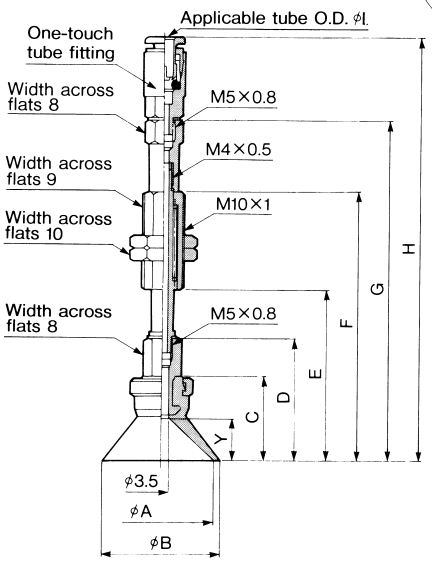

Flat type・Flat with rib

PAD DIAMETER: Ø40 • Ø50

Flat type

Model	ϕA	ϕB	C	D	E	F	G	I:6 H	I:8 H	Y Flat	Y Flat with rib
ZPT40 U/C	40	43	18.5	32	44.5	94.5	109.5	128	133.5	6.5	3.3
ZPT50 U/C	50	53	19.5	33	45.5	95.5	110.5	129	134.5	7.5	3.8

Deep type

Model	ϕA	ϕB	C	D	E	F	G	I:6 H	I:8 H	Y
ZPT40D	40	43	29	42.5	55	105	120	138.5	144	17

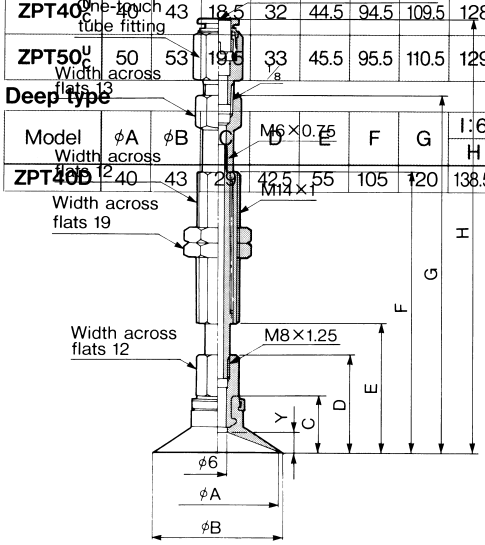

Flat with rib

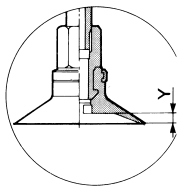

Deep type／ZPT40D only

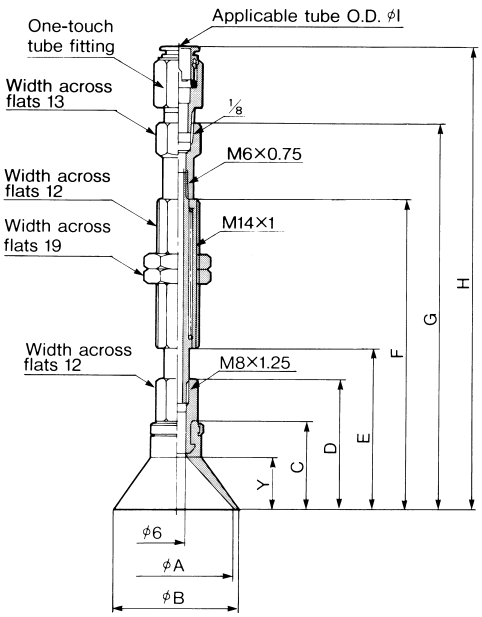

Flat type・Flat with rib

ZPR VACUUM PADS
HORIZONTAL TYPE VACUUM ENTRY
WITHOUT BUFFER - ONE TOUCH FITTING

TECHNICAL SPECIFICATIONS

Vacuum entry	Horizontal type
Connection	With one-touch tube fitting

Pad type	Flat type	Flat with rib	Deep type
Pad dia. (mm)	2, 4, 6, 8, 10, 13, 16, 20, 25, 32, 40, 50	10, 13, 16, 20, 25, 32, 40, 50	10, 16, 25, 40
Material (colour)	See "How to Order"		
Hardness (Shore)	NBR (50°) Silicon (40°) Urethane-flourine (60°)		

DIMENSIONS
PAD DIAMETERS Ø2, Ø4, Ø6, Ø8

Flat type

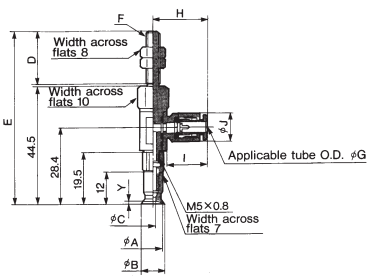

FLAT TYPE

Model	ØA	ØB	ØC	F: M5X0.8		F: M6X1		Y
				D	E	D	E	
ZPR02U	2	2.6	1.2	20	65.5	25	70.5	0.8
ZPR04U	4	4.8	1.6					0.8
ZPR06U	6	7	2.5					0.8
ZPR08U	8	9	2.5					1

APPLICABLE TUBE

Applicable Tube O.D.	ØG	H	I	ØJ
Ø4	4	20.6	15.6	10.4
Ø6	6	21.6	16.68	12.88

DIMENSIONS
PAD DIAMETERS Ø10, Ø13, Ø16

Flat type

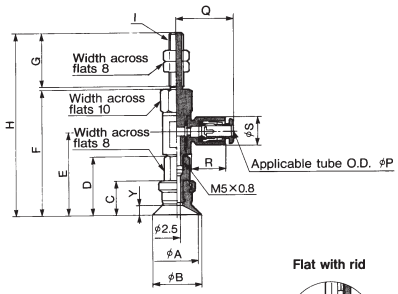

Flat with rid

Deep type／ZPR10D·16D only

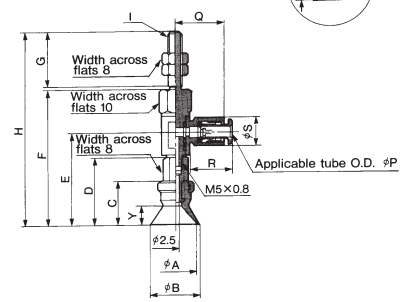

FLAT TYPE - FLAT WITH RIB

Model	ØA	ØB	C	D	E	F	I: M5X0.8		I: M6X1		Y	
							G	H	G	H	Flat	Flat with rib
ZPR10 U/C	10	12	12	21	29.9	46	20	67	25	72	3	1.7
ZPR13 U/C	13	15	12	21	29.9	46	20	67	25	72	3	1.8
ZPR16 U/C	16	18	12.5	21.5	30.4	46.5	20	67.5	25	72	3.5	1.2

DEEP TYPE

Model	ØA	ØB	C	D	E	F	I: M5X0.8		I: M6X1		Y
							G	H	G	H	
ZPR10D	10	12	15	24	32.9	49	20	70	25	75	6
ZPR16D	16	18	16	25	33.9	50	20	71	25	76	7

APPLICABLE TUBE

Applicable Tube O.D.	ØP	Q	R	ØS
Ø4	4	20.6	15.6	10.4
Ø6	6	21.6	16.6	12.8

MORE DIMENSIONS SEE NEXT PAGE ☞
HOW TO ORDER SEE NEXT PAGE ☞

FOR FURTHER TECHNICAL DETAILS ON THIS PRODUCT REQUEST CATALOGUE REFERENCE E807

VACUUM PADS SERIES ZP

DIMENSIONS
PAD DIAMETERS Ø20, Ø25, Ø32

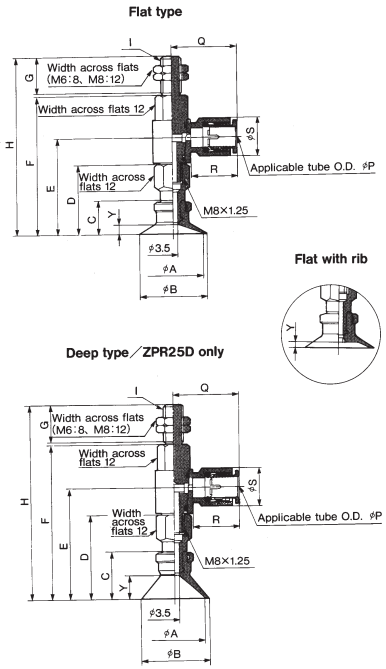

FLAT TYPE - FLAT WITH RIB

Model	ØA	ØB	C	D	E	F	I: M6X1		I: M8X1		Y	
							G	H	G	H	Flat	Flat with rib
ZPR20 U/C	20	23	14	29	39.8	57.6	25	83.5	15	73.5	4	1.7
ZPR25 U/C	25	28	14	29	39.8	57.6	25	83.5	15	73.5	4	1.8
ZPR32 U/C	32	35	14.5	29.5	40.3	58.1	25	84	15	74	4.5	2.3

DEEP TYPE

Model	ØA	ØB	C	D	E	F	I: M6X1		I: M8X1		Y
							G	H	G	H	
ZPR25D	25	28	20	35	48.5	63.6	25	89.5	15	79.5	10

APPLICABLE TUBE

Applicable Tube O.D.	ØP	Q	R	ØS
Ø4	4	23.3	15.8	10.4
Ø6	6	24.3	16.8	12.8
Ø8	8	26.2	18.7	15.2

DIMENSIONS
PAD DIAMETERS Ø40, Ø50

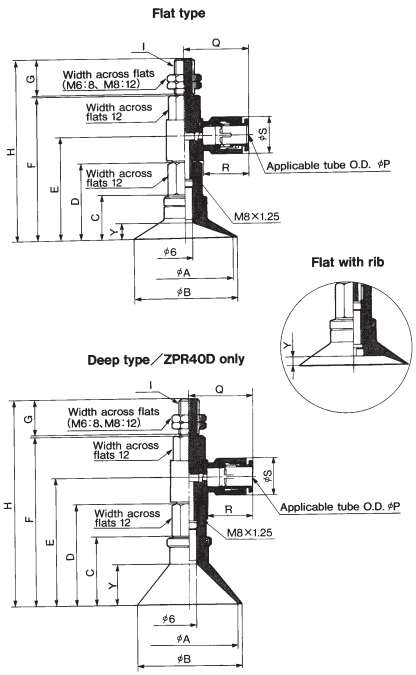

FLAT TYPE - FLAT WITH RIB

Model	ØA	ØB	C	D	E	F	I: M6X1		I: M8X1		Y	
							G	H	G	H	Flat	Flat with rib
ZPR40 U/C	40	43	18.5	32	42.8	60.6	25	86.5	15	76.5	6.5	3.3
ZPR50 U/C	50	53	19.5	33	43.8	61.6	25	87.5	15	77.5	7.5	3.8

DEEP TYPE

Model	ØA	ØB	C	D	E	F	I: M6X1		I: M8X1		Y
							G	H	G	H	
ZPR40D	40	43	29	42.5	53.3	71.1	25	97	15	87	17

APPLICABLE TUBE

Applicable Tube O.D.	ØP	Q	R	ØS
Ø6	6	24.3	16.8	12.8
Ø8	8	26.2	18.7	15.2

HOW TO ORDER
ZPR PAD HORIZONTAL TYPE WITHOUT BUFFER

ZPR ○ ○ ○ — ○ — ○

PAD DIAMETER

02 ...Ø2
04 ...Ø4
06 ...Ø6
08 ...Ø8
10 ...Ø10
13 ...Ø13
16 ...Ø16
20 ...Ø20
25 ...Ø25
32 ...Ø32
40 ...Ø40
50 ...Ø50

PAD TYPE

U .....Flat
C .....Flat with Rib (Not ø2,4,6,8)
D .....Deep (ø10,16,25,40)
B .....Bellows (Not ø2,4)

PAD MATERIAL

N .....Nitrile rubber -black (standard)
S .....Silicon rubber -white
U .....Urethane-brown
F .....Fluorine rubber-black+mark
GN ...Anti-static Nitrile rubber
GS ...Anti-static Siliconrubber

VACUUM PAD – MOUNTING

	Symbol	Thread dia.	Ø2~Ø8	Ø10~Ø16	Ø20~Ø32	Ø40~Ø50
Male thread	A5	M5X0.8	●	●		
	A6	M6X1	●	●	●	●
	A8	M8X1			●	●

(Ask SMC Regional Offices for female thread versions also available

VACUUM ENTRY

	Symbol	Port size	Ø2~Ø8	Ø10~Ø16	Ø20~Ø32	Ø40~Ø50
One-touch tube fitting	04	Ø4 tube	●	●	●	
	06	Ø6 tube	●	●	●	●
	08	Ø8 tube			●	●

STOCKED PRODUCTS
FOR A LIST OF STOCKED PRODUCTS, PLEASE SEE THE CURRENT SMC PRICE LIST

ZPR VACUUM PADS
HORIZONTAL TYPE VACUUM ENTRY WITH BUFFER - ONE TOUCH FITTING

TECHNICAL SPECIFICATIONS

Vacuum entry	Horizontal type
Buffer type	Non-rotation type (K)
Buffer stroke	For Ø2~Ø8....6mm
	For Ø10~Ø50....10mm

Pad type	Flat type	Flat with rib	Deep type
Pad dia. (mm)	2, 4, 6, 8, 10, 13, 16, 20, 25, 32, 40, 50	10, 13, 16, 20, 25, 32, 40, 50	10, 16, 25, 40
Material (colour)	See "How to Order"		
Hardness (Shore)	NBR (50°) Silicon (40°) Urethane-flourine (60°)		

HOW TO ORDER
ZPR PAD HORIZONTAL TYPE ENTRY WITH BUFFER

ZPR ○○○○—○—○

PAD DIAMETER
02.....Ø2 16.....Ø16
04.....Ø4 20.....Ø20
06.....Ø6 25.....Ø25
08.....Ø8 32.....Ø32
10.....Ø10 40.....Ø40
13.....Ø13 50.....Ø50

PAD TYPE
U .....Flat
C .....Flat with Rib (Not ø2,4,6,8)
D .....Deep (ø10,16,25,40)
B .....Bellows (Not ø2,4)

PAD MATERIAL
N .....Nitrile rubber - black (standard)
S .....Silicon rubber - white
U .....Urethane -brown
F .....Fluorine rubber -black+mark
GN ...Anti-static Nitrile rubber
GS ...Anti-static Siliconrubber

VACUUM ENTRY–MOUNTING

	Symbol	Thread dia.	Ø2~Ø8	Ø10~Ø16	Ø20~Ø32	Ø40~Ø50
Male thread	A8	M8X1	●			
	A10	M10X1		●	●	
	A14	M14X1				●

VACUUM ENTRY

	Symbol	Port size	Ø2~Ø8	Ø10~Ø16	Ø20~Ø32	Ø40~Ø50
One-touch tube fitting	04	Ø4 tube	●	●	●	
	06	Ø6 tube	●	●	●	●
	08	Ø8 tube			●	●

BUFFER

Symbol	Stroke	Ø2~Ø8	Ø10~Ø16	Ø20~Ø32	Ø40~Ø50
K6	6mm	●			
K10	10mm		●	●	●

STOCKED PRODUCTS
FOR A LIST OF STOCKED PRODUCTS, PLEASE SEE THE CURRENT SMC PRICE LIST

Vacuum

DIMENSIONS
PAD DIAMETERS Ø2, Ø4, Ø6, Ø8

Flat type

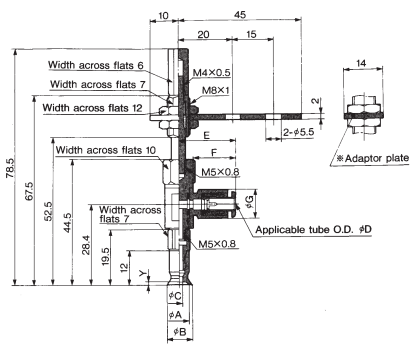

※Adaptor plate:Provided as standard

FLAT TYPE

Model	ØA	ØB	ØC	ØD:Ø4			ØD:Ø6			Y
				E	F	ØG	E	F	ØG	
ZPR02U	2	2.6	1.2	20.6	15.6	10.4	21.6	16.6	12.8	0.8
ZPR04U	4	4.8	1.6							0.8
ZPR06U	6	7	2.5							0.8
ZPR08U	8	9	2.5							1

APPLICABLE TUBE

Applicable Tube O.D.	ØE
Ø4	10.4
Ø6	12.8

MORE DIMENSIONS SEE NEXT PAGE

FOR FURTHER TECHNICAL DETAILS ON THIS PRODUCT REQUEST CATALOGUE REFERENCE E807

DIMENSIONS
PAD DIAMETERS Ø10, Ø13, Ø16

Flat type

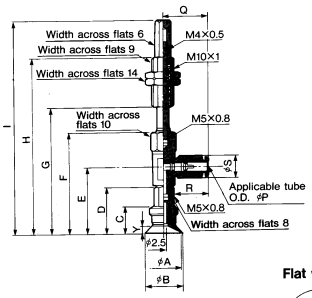

Flat with rib

Deep type／ZPR10D·16D only

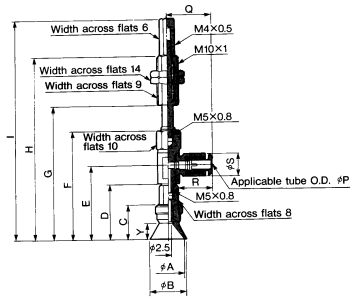

FLAT TYPE - FLAT WITH RIB

Model	ØA	ØB	C	D	E	F	G	H	I	Y	
										Flat	Flat with rib
ZPR10 U C	10	12	12	21	29.9	46	57	80	91	3	1.7
ZPR13 U C	13	15	12	21	29.9	46	57	80	91	3	1.8
ZPR16 U C	16	18	12.5	21.5	30.4	46.5	57.5	80.5	91.5	3.5	1.2

DEEP TYPE

Model	A	ØB	C	D	E	F	G	H	I	Y
ZPR10D	10	12	15	24	32.9	49	60	83	94	6
ZPR16D	16	18	16	25	33.9	50	61	84	95	7

APPLICABLE TUBE

Applicable Tube O.D.	ØP	Q	R	ØS
Ø4	4	20.6	15.6	10.4
Ø6	6	21.6	16.6	12.8

DIMENSIONS
PAD DIAMETERS Ø20, Ø25, Ø32

Flat type

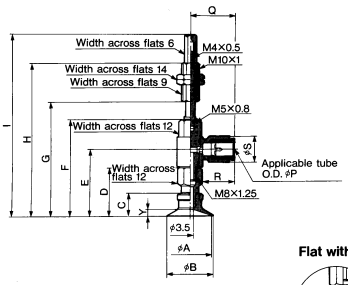

Flat with rib

Deep type／ZPR25D only

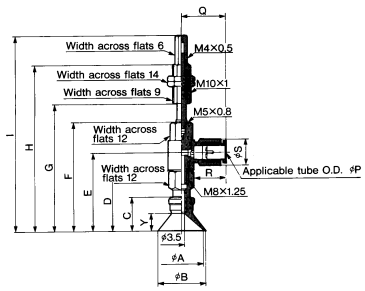

FLAT TYPE - FLAT WITH RIB

Model	A	ØB	C	D	E	F	G	H	I	Y	
										Flat	Flat with Rib
ZPR20	20	23	14	29	39.8	57.6	68.6	91.5	102.6	4	1.7
ZPR25	25	28	14	29	39.8	57.6	68.6	91.5	102.6	4	1.8
ZPR32	32	35	14.5	29.5	40.3	58.1	69.1	92	103.1	4.5	23

DEEP TYPE

Model	ØA	ØB	C	D	E	F	G	H	I	Y
ZPR25D	25	28	20	35	45.8	63.6	74.6	97.6	108.6	10

APPLICABLE TUBE

Applicable Tube O.D	ØP	Q	R	ØS
Ø4	4	23.3	15.8	10.4
Ø6	6	24.3	16.8	12.8
Ø8	8	26.2	18.7	15.2

DIMENSIONS
PAD DIAMETERS Ø40, Ø50

Flat type

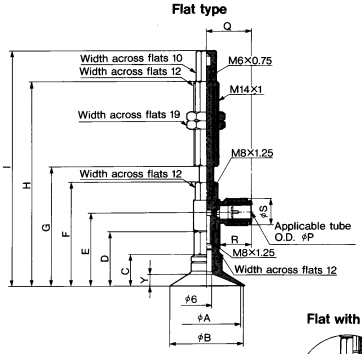

Flat with rib

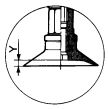

Deep type／ZPR40D only

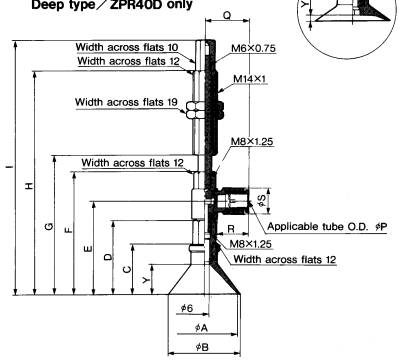

FLAT TYPE - FLAT WITH RIB

Model	ØA	ØB	C	D	E	F	G	H	I	Y	
										Flat	Flat with Rib
ZPR40 U C	40	43	18.5	32	42.8	60.6	72.6	122.6	140.6	6.5	3.3
ZPR50 U C	50	53	19.5	33	43.8	61.6	73.6	123.6	141.6	7.5	3.8

DEEP TYPE

Model	ØA	ØB	C	D	E	F	G	H	I	Y
ZPR40D	40	43	29	42.5	53.3	71.1	81.1	133.1	151.1	17

APPLICABLE TUBE

Applicable Tube O.D.	ØP	Q	R	ØS
Ø6	6	24.3	16.8	12.8
Ø8	8	26.2	18.7	15.2

ZP SERIES VACUUM PADS

- 288 standard options
- 12 diameters
- 4 types
- 6 materials

DIMENSIONS ZP VACUUM PADS

ZP02U○~08U○

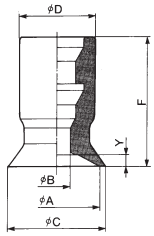

ZP10U○~50U○

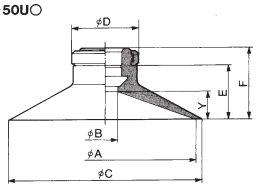

FLAT TYPE PAD

Part No.	Type	ØA	ØC	ØB	D	E	F	Y
ZP02U•	U02	2	2.6	1.2	7	-	12	0.8
ZP04U•	U04	4	4.8	1.6	7	-	12	0.8
ZP06U•	U06	6	7	2.5	7	-	12	0.8
ZP08U•	U08	8	9	2.5	7	-	12	1
ZP10U•	U10	10	12	4	13	7.7	12	3
ZP13U•	U13	13	15	4	13	7.7	12	3
ZP16U•	U16	16	18	4	13	8.2	12.5	3.5
ZP20U•	U20	20	23	4	15	9.5	14	4
ZP25U•	U25	25	28	4	15	9.5	14	4
ZP32U•	U32	32	35	4	15	10	14.5	4.5
ZP40U•	U40	40	43	7	18	13.7	18.5	6.5
ZP50U•	U50	50	53	7	18	14.7	19.5	7.5

DIMENSIONS ZP VACUUM PADS

ZP10C○~50C○

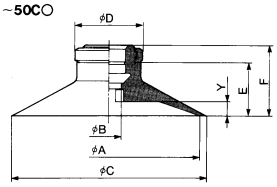

FLAT TYPE PAD WITH RIB

Part No.	Type	ØA	ØC	ØB	ØD	E	F	Y
ZP10C•	C10	10	12	41	13	7.7	12	1.7
ZP13C•	C13	13	15	4	13	7.7	12	1.8
ZP16C•	C16	16	18	4	13	8.2	12.5	1.2
ZP20C•	C20	20	23	4	15	9.5	14	1.7
ZP25C•	C25	25	28	4	15	9.5	14	1.8
ZP32C•	C32	32	35	4	15	10	14.5	2.3
ZP40C•	C40	40	43	7	18	13.7	18.5	3.3
ZP50C•	C50	50	53	7	18	14.7	19.5	3.3

DIMENSIONS ZP VACUUM PADS

φ6~φ8
ZP06B□~08B□

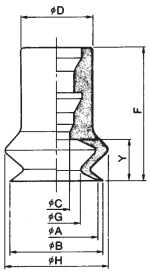

φ10~φ50
ZP10B□~50B□

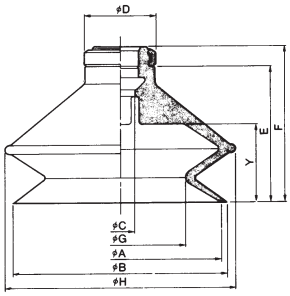

BELLOWS TYPE PAD

Part No.	Type	ØA	ØB	ØC	ØD	E	F	ØG	ØH	Y
ZP06B	B06	6	7	2.5	7	-	13	3.3	9.1	4
ZP08B	B08	8	9	2.5	7	-	13	4.7	10.1	4
ZP10B	B10	10	12	4	13	11.7	16	5.5	13.8	5.5
ZP13B	B13	13	15	4	13	14.2	18.5	8.7	19	7.5
ZP16B	B16	16	18	4	13	15.7	20	9.9	21	8.5
ZP20B	B20	20	22	4	15	19	23.5	121.4	25	10.5
ZP25B	B25	25	27	4	15	19.5	24	15.6	28	10.5
ZP32B	B32	32	34	4	15	24.5	29	18.9	37	14
ZP40B	B40	40	43	7	18	29.2	34	24.4	48	16
ZP50B	B50	50	53	7	18	33.2	38	32.4	57	19

DIMENSIONS ZP VACUUM PADS

ZP10D○~40D○

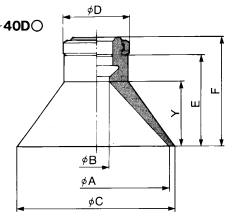

DEEP TYPE PAD

Part No.	Type	G	ØC	ØB	ØD	E	F	Y
ZP10D•	D10	10	12	4	13	10.7	15	6
ZP16D•	D16	16	18	4	13	11.7	16	7
ZP25D•	D25	25	28	4	15	15.5	20	10
ZP40D•	D40	40	43	7	18	24.2	29	17

HOW TO ORDER ZP VACUUM PADS

ZP ○ ○ ○

PAD DIAMETER

02 ...Ø2
04 ...Ø4
06 ...Ø6
08 ...Ø8
10 ...Ø10
13 ...Ø13
16 ...Ø16
20 ...Ø20
25 ...Ø25
32 ...Ø32
40 ...Ø40
50 ...Ø50

PAD MATERIAL

N .....Nitrile rubber (standard)
S .....Silicon rubber
U .....Urethane
F .....Fluorine rubber
GN ...Anti-static Nitrile rubber
GS ...Anti-static Silicon rubber

PAD TYPE

U .....Flat
C .....Flat with Rib (Not ø2,4,6,8)
D .....Deep (ø10,16,25,40)
B .....Bellows (Not ø2,4)

STOCKED PRODUCTS

FOR A LIST OF STOCKED PRODUCTS, PLEASE SEE THE CURRENT SMC PRICE LIST

FOR FURTHER TECHNICAL DETAILS ON THIS PRODUCT REQUEST CATALOGUE REFERENCE E807

HEAVY DUTY VACUUM PADS SERIES ZPT/ZPX

- Wide range of materials: NBR, Silicon, Fluorine, Urethane, EPM
- Heavy duty range of sizes from Ø40 ~ Ø125
- Choice of mounting styles - horizontal or axial vacuum entry
- Optional spring loaded buffer
- 4 choices of buffer stroke
- Bellows option

	Standard Type (Without Buffer)		Buffer Mount Type
ZPT Axial Vacuum Entry	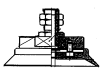 Male thread Mounting. Female thread Vacuum Entry	 Common Female Vacuum Entry and Mounting	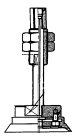 Male thread Buffer Mounting Female thread Vacuum Entry
ZPX Horizontal Vacuum Entry	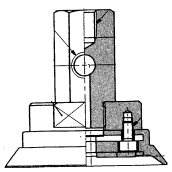 Female thread Mounting Female thread Vacuum Entry		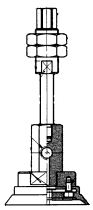 Male thread Buffer Mounting Female Thread Vacuum Entry

MODELS ZPT/ZPX

Buffer Stroke	Ø Pad	Ø40	Ø50	Ø63	Ø80	Ø100	Ø125
25		•	•	•	•	•	•
50		•	•	•	•	•	•
75		•	•	•	•	•	•
100		-	-	-	-	•	•

Vacuum

PAD MATERIALS & SPECIFICATIONS

◎: Little or no influence ○: Good performance, subject to conditions ×: Not compatible

Item / Material	Hardness HS (±5°)	Temperature range °C	Oil resistance (Gasoline)	Oil resistance (Benzol)	Alkali resistance	Acid resistance	Weatherability	Ozone resistance	Abrasion resistance	Waterproof	Solvent resistance (benzene,toluene)
NBR	50°	0 to 120	◎	×	○	○	×	×	◎	○	×
Silicon rubber	50°	–30 to 250	×	×	○	×	◎	◎	×	○	×
Urethane rubber	60°	0 to 60	◎	×	×	×	◎	◎	◎	×	×
Fluoro rubber	60°	0 to 250	◎	◎	×	◎	◎	◎	○	◎	◎
EPR	50°	–20 to 150	×	×	◎	○	◎	◎	○	◎	×

The above table covers only general characteristics of subject rubber materials.
Pad materials used by SMC pass nominal JIS material standards; however, actual performance depends on operating conditions.

VACUUM PADS SERIES ZP

VERTICAL VACUUM ENTRY: WITHOUT BUFFER

DIMENSIONS

ZPT $^{40}_{50}$H□-A14 (Male thread)

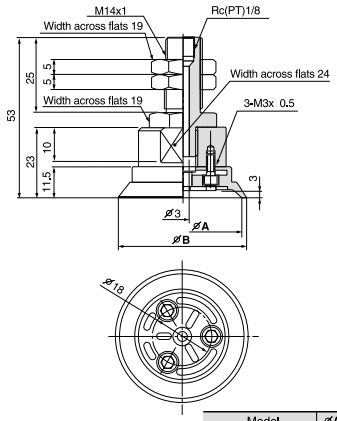

mm

Model	ØA	ØB
ZPT40H□-A14	40	42
ZPT50H□-A14	50	52

ZPT $^{40}_{50}$H□-B$^{8}_{10}$ (Female thread)

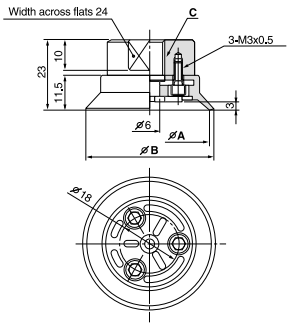

mm

Model	ØA	ØB	C
ZPT40H□-B8	40	42	M8x1.25
ZPT40H□-B10	40	42	M10x1.5
ZPT50H□-B8	50	52	M8x1.25
ZPT50H□-B10	50	52	M10x1.5

SPECIFICATIONS

Vacuum entry	Entry		Vertical type	
	Connection		Male thread	Female thread
	Thread dia.	Ø40, Ø50	M14x1	M8x1.25, M10x1.5
		Ø63, Ø80	M16x1.5	M8x1.25, M10x1.5, M12x1.75, M16x1.5
		Ø100, Ø125	M16x1.5	M12x1.75, M16x1.5
	Mounting		Rc(PT)1/8	Use connection for vacuum entry

ZPT $^{63}_{80}$H□-A16 (Male thread)

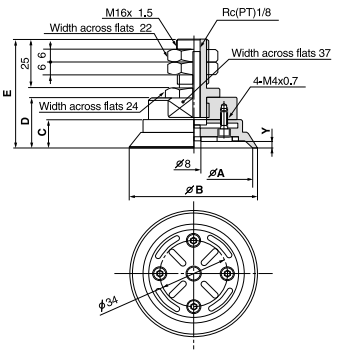

mm

Model	ØA	ØB	C	D	E	Y
ZPT63H□-A16	63	65	14.5	26	56	3.5
ZPT80H□-A16	80	82	16.5	28	58	4.5

ZPT $^{63}_{80}$H□-B□ (Female thread)

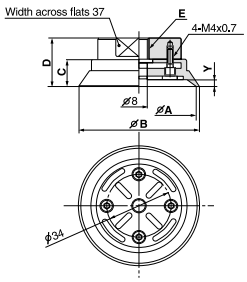

mm

Model	ØA	ØB	C	D	E	Y
ZPT63H□-B8	63	65	14.5	26	M8x1.25	3.5
ZPT63H□-B10	63	65	14.5	26	M10x1.5	3.5
ZPT63H□-B12	63	65	14.5	26	M12x1.75	3.5
ZPT63H□-B16	63	65	14.5	26	M16x1.5	3.5
ZPT80H□-B8	80	82	16.5	28	M8x1.25	4.5
ZPT80H□-B10	80	82	16.5	28	M10x1.5	4.5
ZPT80H□-B12	80	82	16.5	28	M12x1.75	4.5
ZPT80H□-B16	80	82	16.5	28	M16x1.5	4.5

PAD TYPE

Pad dia. (mm)	Ø40, Ø50, Ø63, Ø80, Ø100, Ø125
Material (Color)	NBR(Black), Silicon rubber(White), Urethane rubber(Brown) Fluoro rubber(Black with mark(F)), EPR(Black with mark(E))
Hardness	NBR,Silicon rubber,EPR:50° Urethane rubber,Fluoro rubber:60°

ZPT $^{100}_{125}$H□-A16 (Male thread)

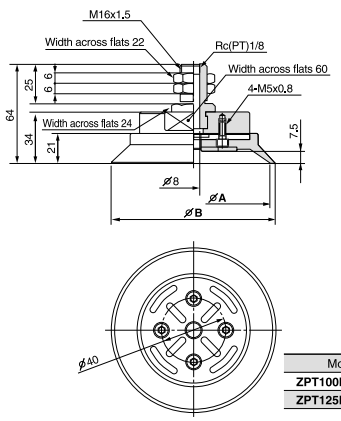

mm

Model	ØA	ØB
ZPT100H□-A16	100	103
ZPT125H□-A16	125	128

ZPT $^{100}_{125}$H□-B$^{12}_{16}$ (Female thread)

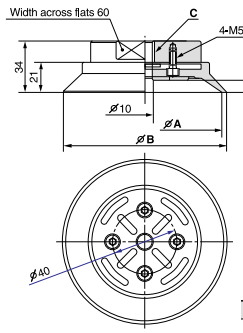

mm

Model	ØA	ØB	C
ZPT100H□-B12	100	103	M12x1.75
ZPT100H□-B16	100	103	M16x1.5
ZPT125H□-B12	125	128	M12x1.75
ZPT125H□-B16	125	128	M16x1.5

HOW TO ORDER

ZPT ○ H ○ — ○

PAD DIA. (MM)

40 ...Ø40
50 ...Ø50
63 ...Ø63
80 ...Ø80
100 ...Ø100
125 ...Ø125

PAD TYPE

H .....Heavy Duty Pad
HB ...Heavy Duty Large Type Bellows Pad

MATERIAL

N .....NBR
S .....Silicon rubber
U .....Urethane rubber
F .....Fluoro rubber
E .....EPR

VACUUM ENTRY MOUNTING THREAD

A14 ...M14x1
A16 ...M16x1.5
B8 ...M8x1.25
B10 ...M10x1.5
B12 ...M12x1.75
B16 ...M16x1.5

FOR FURTHER TECHNICAL DETAILS ON THIS PRODUCT REQUEST CATALOGUE REFERENCE E807

VERTICAL VACUUM ENTRY: WITH BUFFER

SPECIFICATIONS

Vacuum entry	Entry		Vertical
	Connection		Male thread
	Thread dia.	⌀40, ⌀50	M18x1.5
		⌀63, ⌀80	M18x1.5
		⌀100, ⌀125	M22x1.5
Mounting			Rc(PT)1/8

Buffer type		Without non-rotating (J)
Applicable buffer stroke	⌀40 to ⌀80	25mm,50mm,75mm
	⌀100, ⌀125	25mm,50mm,75mm,100mm

PAD TYPE

Pad dia. (mm)	⌀40, ⌀50, ⌀63, ⌀80, ⌀100, ⌀125
Material (Color)	NBR(Black), Silicon rubber(White), Urethane rubber(Brown), Fluoro rubber(Black with mark Ⓕ), EPR(Black with mark Ⓔ)
Hardness	NBR,Silicon rubber,EPR:50° Urethane rubber,Fluoro rubber:60°

HOW TO ORDER

ZPT ◯ H ◯ J ◯ — B01 — ◯

PAD DIA. (MM)
40 ...Ø40
50 ...Ø50
63 ...Ø63
80 ...Ø80
100 ...Ø100
125 ...Ø125

PAD TYPE
H .....Heavy Duty Pad
HB ...Heavy Duty Large Type Bellows Pad

MATERIAL
N .....NBR
S .....Silicon rubber
U .....Urethane rubber
F .....Fluoro rubber
E .....EPR

APPLICABLE BUFFER STROKE (WITHOUT NON-ROTATING)

Stroke	Ø40	Ø50	Ø63	Ø80	Ø100	Ø125
25	•	•	•	•	•	•
50	•	•	•	•	•	•
75	•	•	•	•	•	•
100	–	–	–	–	•	•

Spring Force (Ø40 to Ø80)	
First Mounting Load	6.9N (0.70kgf)
Second Mounting Load	11.8N (1.20kgf)

Spring Force (Ø100 to Ø125)	
First Mounting Load	10N (1kgf)
Second Mounting Load	15N (1.5kgf)

MOUNTING THREAD
A18 ...M18x1.5 (Ø40 to Ø80)
A22 ...M22x1.5 (Ø100, Ø125)

VACUUM ENTRY
B01 ...Rc(PT)1/8

DIMENSIONS

ZPT 40/50 H J -B01-A18 (With buffer)

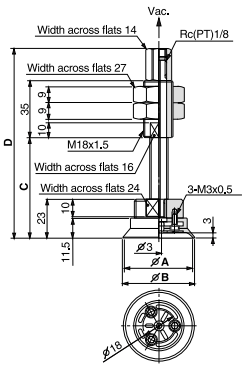

mm

Model	⌀A	⌀B	C	D
ZPT40H J25-B01-A18	40	42	63	118.5
ZPT40H J50-B01-A18	40	42	98	153.5
ZPT40H J75-B01-A18	40	42	134	189.5
ZPT50H J25-B01-A18	50	52	63	118.5
ZPT50H J50-B01-A18	50	52	98	153.5
ZPT50H J75-B01-A18	50	52	134	189.5

ZPT 63/80 H J -B01-A18 (With buffer)

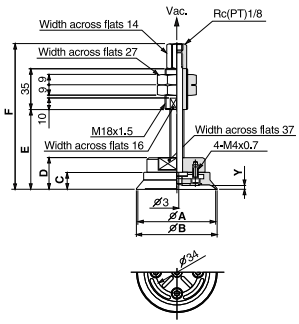

mm

Model	⌀A	⌀B	C	D	E	F	Y
ZPT63H J25-B01-A18	63	65	14.5	26	66	121.5	3.5
ZPT63H J50-B01-A18	63	65	14.5	26	101	156.5	3.5
ZPT63H J75-B01-A18	63	65	14.5	26	137	192.5	3.5
ZPT80H J25-B01-A18	80	83	16.5	28	68	123.5	4.5
ZPT80H J50-B01-A18	80	83	16.5	28	103	158.5	4.5
ZPT80H J75-B01-A18	80	83	16.5	28	139	194.5	4.5

ZPT 100/125 H J -B01-A22 (With buffer)

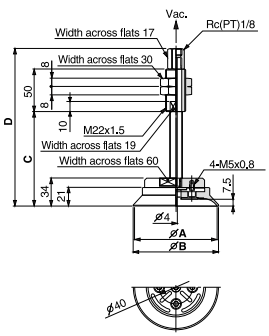

mm

Model	⌀A	⌀B	C	D
ZPT100H J25-B01-A22	100	103	78	152
ZPT100H J50-B01-A22	100	103	114	188
ZPT100H J75-B01-A22	100	103	154	228
ZPT100H J100-B01-A22	100	103	189	263
ZPT125H J25-B01-A22	125	128	78	152
ZPT125H J50-B01-A22	125	128	114	188
ZPT125H J75-B01-A22	125	128	154	228
ZPT125H J100-B01-A22	125	128	189	263

SEE INSIDE FRONT COVER FOR DETAILS OF YOUR LOCAL SALES OFFICE

FOR FURTHER TECHNICAL DETAILS ON THIS PRODUCT REQUEST CATALOGUE REFERENCE E807

HORIZONTAL VACUUM ENTRY: WITHOUT BUFFER

SPECIFICATIONS

Vacuum entry	Entry		Horizontal
	Connection		Female thread
	Thread dia.	⌀40, ⌀50	M8x1.25, M10x1.5
		⌀63, ⌀80	M10x1.5, M12x1.75
		⌀100, ⌀125	M10x1.5, M12x1.75
Mounting			Rc(PT)1/8

PAD TYPES

Pad dia. (mm)	⌀40, ⌀50, ⌀63, ⌀80, ⌀100, ⌀125
Material (Color)	NBR(Black), Silicon rubber(White), Urethane rubber(Brown), Fluoro rubber(Black with mark Ⓕ), EPR(Black with mark Ⓔ)
Hardness	NBR,Silicon rubber,EPR:50° Urethane rubber,Fluoro rubber:60°

HOW TO ORDER

ZPX ◯ H ◯ — B01 — ◯

PAD DIA. (MM)
40 ...Ø40
50 ...Ø50
63 ...Ø63
80 ...Ø80
100 ...Ø100
125 ...Ø125

PAD TYPE
H .....Heavy Duty Pad
HB ...Heavy Duty Large Type Bellows Pad

MOUNTING THREAD
B8 ...M8x1.25 (Ø40, Ø50)
B10 ...M10x1.5 (Ø63 to Ø125)
B12 ...M12x1.75 (Ø63 to Ø125

VACUUM ENTRY
B01 ...Rc(PT)1/8

MATERIAL
N .....NBR
S .....Silicon rubber
U .....Urethane rubber
F .....Fluoro rubber
E .....EPR

DIMENSIONS

ZPX $^{40}_{50}$H□-B01-B$^{8}_{10}$ (Female thread)

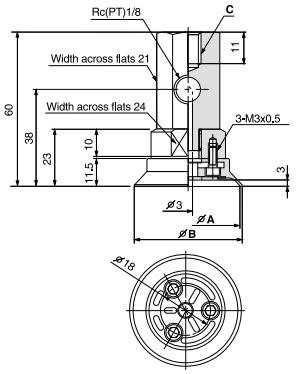

mm

Model	⌀A	⌀B	C
ZPX40H□-B01-B8	40	42	M8x1.25
ZPX40H□-B01-B10	40	42	M10x1.5
ZPX50H□-B01-B8	50	52	M8x1.25
ZPX50H□-B01-B10	50	52	M10x1.5

ZPX $^{63}_{80}$H□-B01-B$^{10}_{12}$ (Female thread)

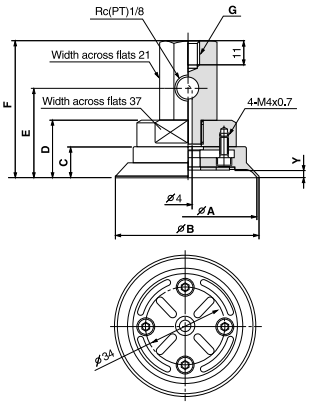

mm

Model	⌀A	⌀B	C	D	E	F	Y	G
ZPX63H□-B01-B10	63	65	14.5	26	41	63	3.5	M10x1.5
ZPX63H□-B01-B12	63	65	14.5	26	41	63	3.5	M12x1.75
ZPX80H□-B01-B10	80	82	16.5	28	43	65	4.5	M10x1.5
ZPX80H□-B01-B12	80	82	16.5	28	43	65	4.5	M12x1.75

ZPX $^{100}_{125}$H□-B01-B$^{10}_{12}$ (Female thread)

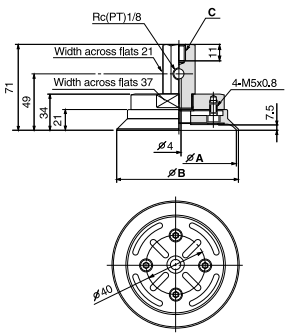

mm

Model	⌀A	⌀B	C
ZPX100H□-B01-B10	100	103	M10x1.5
ZPX100H□-B01-B12	100	103	M12x1.75
ZPX125H□-B01-B10	125	128	M10x1.5
ZPX125H□-B01-B12	125	128	M12x 1.75

FOR FURTHER TECHNICAL DETAILS ON THIS PRODUCT REQUEST CATALOGUE REFERENCE E807

HORIZONTAL VACUUM ENTRY: WITH BUFFER

SPECIFICATIONS

Vacuum entry	Entry		Horizontal
	Connection		Male thread
	Thread dia.	⌀40, ⌀50	M18x1.5
		⌀63, ⌀80	M18x1.5
		⌀100, ⌀125	M22x1.5
Mounting			Rc(PT)1/8

Buffer type		Without non-rotating (J)
Applicable buffer stroke	⌀40 to ⌀80	25mm,50mm,75mm
	⌀100, ⌀125	25mm,50mm,75mm,100mm

PAD TYPES

Pad dia. (mm)	⌀40, ⌀50, ⌀63, ⌀80, ⌀100, ⌀125
Material (Color)	NBR(Black), Silicon rubber(White), Urethane rubber(Brown), Fluoro rubber(Black with mark Ⓕ), EPR(Black with mark Ⓔ)
Hardness	NBR,Silicon rubber,EPR:50° Urethane rubber,Fluoro rubber:60°

HOW TO ORDER

ZPX ○ H ○ J ○ — B01 — ○

PAD DIA. (MM)
40 ...Ø40
50 ...Ø50
63 ...Ø63
80 ...Ø80
100 ...Ø100
125 ...Ø125

PAD TYPE
H .....Heavy Duty Pad
HB ...Heavy Duty Large Type Bellows Pad

MATERIAL
N .....NBR
S .....Silicon rubber
U .....Urethane rubber
F .....Fluoro rubber
E .....EPR

MOUNTING THREAD
A18 ...M18x1.5 (Ø40 to Ø80)
A22 ...M22x1.5 (Ø100, Ø125)

VACUUM ENTRY
B01 ...Rc(PT)1/8

APPLICABLE BUFFER STROKE (WITHOUT NON-ROTATING)

Stroke	Ø40	Ø50	Ø63	Ø80	Ø100	Ø125
25	•	•	•	•	•	•
50	•	•	•	•	•	•
75	•	•	•	•	•	•
100	–	–	–	–	•	•

Spring Force (Ø40 to Ø80)	
First Mounting Load	6.9N (0.70kgf)
Second Mounting Load	11.8N (1.20kgf)

Spring Force (Ø100 to Ø125)	
First Mounting Load	10N (1kgf)
Second Mounting Load	15N (1.5kgf)

DIMENSIONS

ZPX $^{40}_{50}$H J -B01-A18 (With buffer)

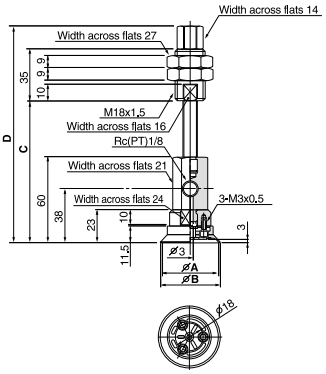

mm

Model	⌀A	⌀B	C	D
ZPX40H J25-B01-A18	40	42	100	151
ZPX40H J50-B01-A18	40	42	135	186
ZPX40H J75-B01-A18	40	42	171	222
ZPX50H J25-B01-A18	50	52	100	151
ZPX50H J50-B01-A18	50	52	135	186
ZPX50H J75-B01-A18	50	52	171	222

ZPX $^{63}_{80}$H J -B01-A18 (With buffer)

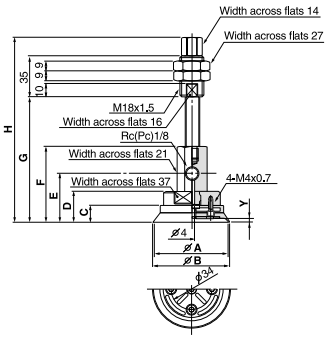

mm

Model	⌀A	⌀B	C	D	E	F	G	H	Y
ZPX63H J25-B01-A18	63	65	14.5	26	41	63	103	154	3.5
ZPX63H J50-B01-A18	63	65	14.5	26	41	63	136	189	3.5
ZPX63H J75-B01-A18	63	65	14.5	26	41	63	172	225	3.5
ZPX80H J25-B01-A18	80	82	16.5	28	43	65	105	156	4.5
ZPX80H J50-B01-A18	80	82	16.5	28	43	65	138	191	4.5
ZPX80H J75-B01-A18	80	82	16.5	28	43	65	174	227	4.5

ZPX $^{100}_{125}$H J -B01-A22 (With buffer)

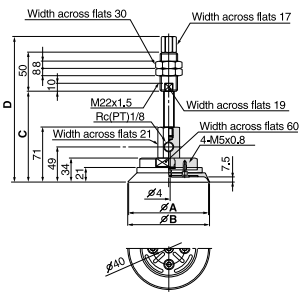

mm

Model	⌀A	⌀B	C	D
ZPX100H J25-B01-A22	100	103	115	186
ZPX100H J50-B01-A22	100	103	151	222
ZPX100H J75-B01-A22	100	103	191	262
ZPX100H J100-B01-A22	100	103	226	297
ZPX125H J25-B01-A22	125	128	115	186
ZPX125H J50-B01-A22	125	128	151	222
ZPX125H J75-B01-A22	125	128	191	262
ZPX125H J100-B01-A22	125	128	226	297

SEE INSIDE FRONT COVER FOR DETAILS OF YOUR LOCAL SALES OFFICE

FOR FURTHER TECHNICAL DETAILS ON THIS PRODUCT REQUEST CATALOGUE REFERENCE E807

REPLACEABLE PARTS: PAD UNITS

HOW TO ORDER

ZP ○ H ○

PAD DIA. (MM)
40 ...Ø40
50 ...Ø50
63 ...Ø63
80 ...Ø80
100 ...Ø100
125 ...Ø125

PAD TYPE
H .....Heavy Duty Pad
HB ...Heavy Duty Large Type Bellows Pad

MATERIAL
N .....NBR
S .....Silicon rubber
U .....Urethane rubber
F .....Fluoro rubber
E .....EPR

TECHNICAL SPECIFICATIONS WEIGHT TABLE

NBR

Part number	Weight (g)
ZP40HN	15
ZP50HN	27
ZP63HN	57
ZP80HN	86
ZP100HN	160
ZP125HN	224

Other materials (g)

Pad dia.	Silicon	Urethan	Fluoro	EPR
Ø40	-1	0	5	-1
Ø50	-1	0	8	0
Ø63	-2	0	16	0
Ø80	-3	1	27	-1
Ø100	-5	1	53	-1
Ø125	-8	3	84	0

∗Add NBR weight to the above table for other material.

Contact SMC Regional offices for details of Bellows Pads

DIMENSIONS

ZP 40/50 H

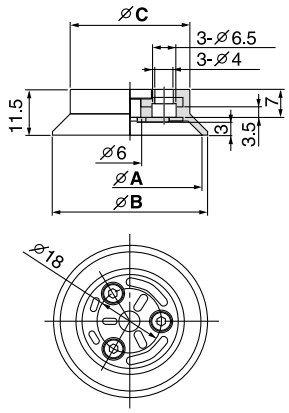

mm

Model	ØA	ØB	ØC
ZP40H	40	42	32
ZP50H	50	52	42

ZP 63/80 H

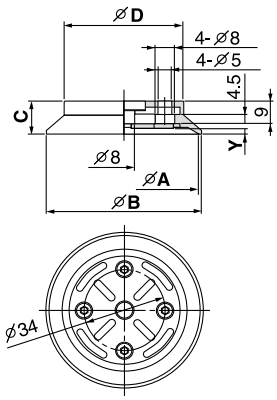

mm

Model	ØA	ØB	C	D	Y
ZP63H	63	65	14.5	54	3.5
ZP80H	80	82	16.5	68	4.5

ZP 100/125 H

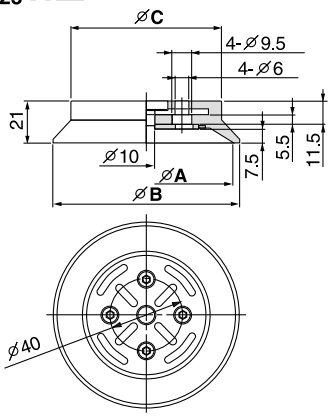

mm

Model	ØA	ØB	ØC
ZP100H	100	103	80
ZP125H	125	128	104

How to Assemble/Disassemble

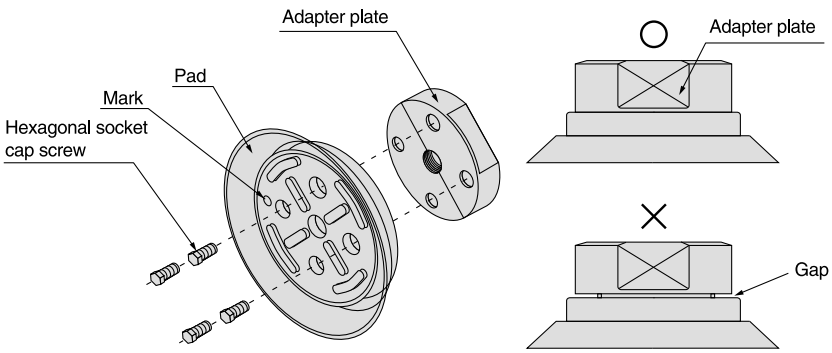

Remove bolts with a hex. key wrench from the pad underside.
Tighten new pad with the bolts ensuring there is no gap between the adapter plate and the pad.

How to Distinguish Different Pad Materials

Check the mark on the pad's interior surface as shown in the figure on the left.

Material	Color	Mark
NBR	Black	—
Silicon rubber	White	—
Urethane rubber	Brown	—
Fluoro rubber	Black	Ⓕ
EPR	Black	Ⓔ

FOR FURTHER TECHNICAL DETAILS ON THIS PRODUCT REQUEST CATALOGUE REFERENCE E807