THIS DRAWING IS UNPUBLISHED. RELEASED FOR PUBLICATION -.- .
© COPYRIGHT - BY TYCO ELECTRONICS CORPORATION. ALL RIGHTS RESERVED.

LOC	DIST
GP	00

REVISIONS

P	LTR	DESCRIPTION	DATE	DWN	APVD
	A	REVISED PER ECO-06-028339	3/JAN/07	ZMR	EDB

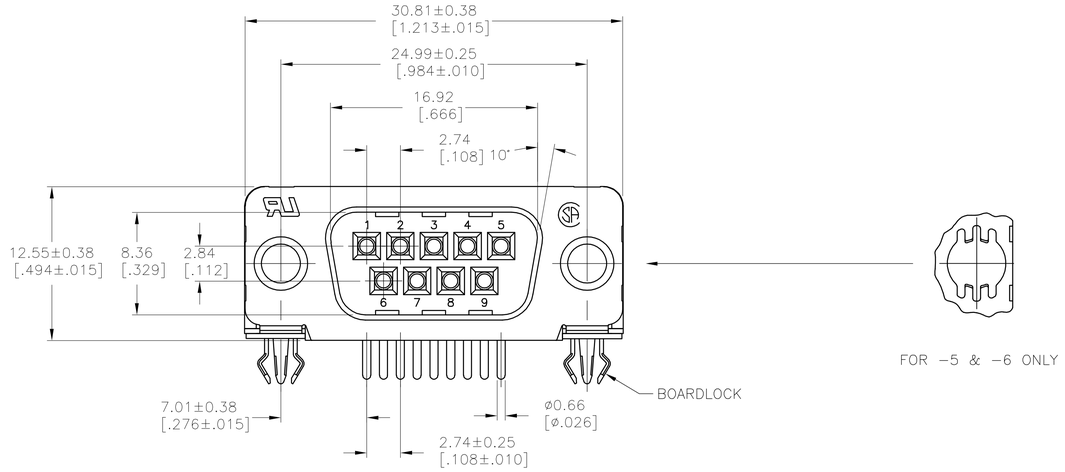

1. HOUSING: NYLON OR POLYESTER, FLAME RETARDANT, 94V-0 RATED, COLOR BLACK.
   SHELL: CARBON STEEL.
   CONTACTS: BRASS.
   EYELETS: BRASS.
   BOARDLOCKS: COPPER ALLOY.
   INSERTS: ZINC.
   SCREWLOCKS: ZINC.
2. SHELL: .00254 [.000100] MIN TIN OVER .00127 [.000050] MIN COPPER.
   CONTACTS: SEE TABLE.
   EYELETS: .00508 [.000200] MIN TIN OVER COPPER FLASH.
   BOARDLOCKS: .00508 [.000200] MIN TIN OVER .00127 [.000050] MIN NICKEL.
   INSERTS: CLEAR CHROMATE.
   SCREWLOCKS: CLEAR CHROMATE.
3. .00076 [.000030] MIN GOLD ON MATING END, .00254 [.000100] MIN TIN ON SOLDER END, ALL OVER .00127 [.000050] MIN NICKEL.
   -OR-
   GOLD FLASH OVER .00076 [.000030] MIN PALLADIUM NICKEL ON MATING END, .00254 [.000100] MIN TIN ON SOLDER END, ALL OVER .00127 [.000050] MIN NICKEL.
4. GOLD FLASH ON MATING END, .00254 [.000100] MIN TIN ON SOLDER END, ALL OVER .00127 [.000050] MIN NICKEL.

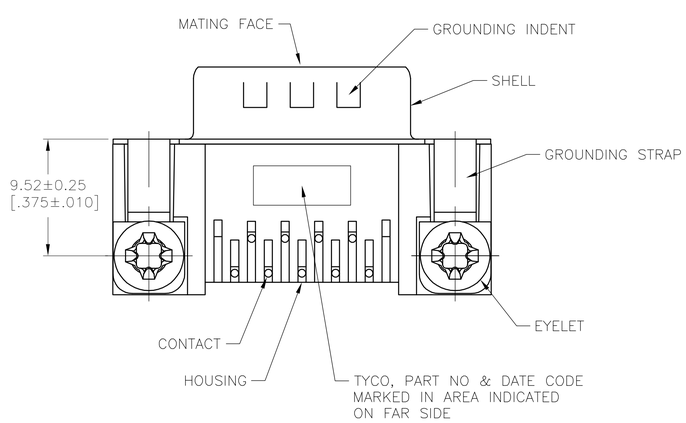

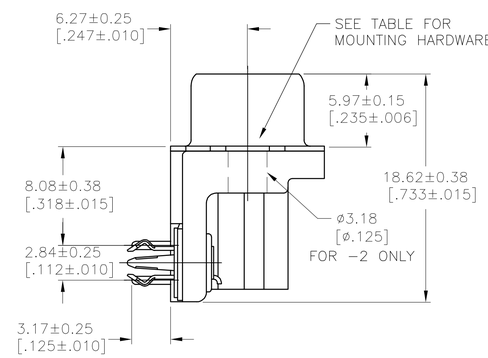

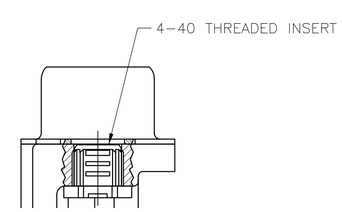

DETAIL A

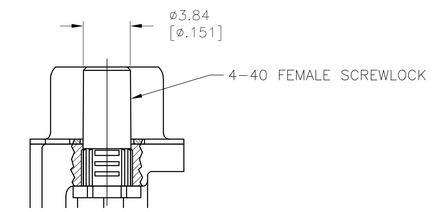

DETAIL B

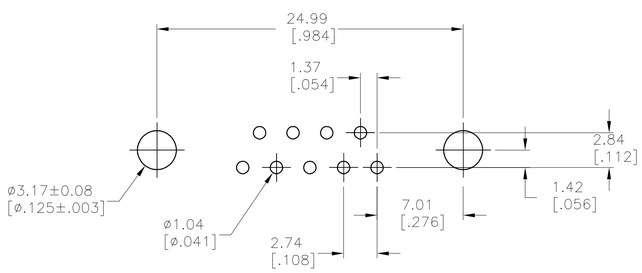

RECOMMENDED PC BOARD LAYOUT
1.57[.062] PC BOARD
(VIEWED FROM CONNECTOR SIDE)

3	SEE DETAIL B	5747840-6
4	SEE DETAIL B	5747840-5
3	SEE DETAIL A	5747840-4
4	SEE DETAIL A	5747840-3
3	NONE	5747840-2
CONTACT FINISH	MOUNTING HARDWARE	PART NUMBER

COPYRIGHT 2005
TYCO ELECTRONICS CORP
ALL RIGHTS RESERVED

THIS DRAWING IS A CONTROLLED DOCUMENT.

DIMENSIONS: mm[INCHES]

TOLERANCES UNLESS OTHERWISE SPECIFIED:
0 PLC ± -
1 PLC ± -
2 PLC ± -
3 PLC ± 0.13[.005]
4 PLC ± -
ANGLES ± 2°

MATERIAL 1
FINISH 2

DWN J.GERACE 07FEB05
CHK S.BOLASH 07FEB05
APVD M.WALMSLEY 07FEB05
PRODUCT SPEC 108-40025
APPLICATION SPEC 114-40010
WEIGHT -

Tyco Electronics Corporation
Harrisburg, Pa 17105

NAME
PLUG ASSEMBLY, SIZE 1, 9 POS,
RIGHT ANGLE, FRONT METAL SHELL,
8.08[.318] SERIES, AMPLIMITE HD-20

SIZE	CAGE CODE	DRAWING NO	RESTRICTED TO
A1	00779	C-5747840	-

CUSTOMER DRAWING | SCALE 4:1 | SHEET 1 OF 1 | REV A