LM358, LM258, LM2904, LM2904V

Dual Differential Input, Low Power Operational Amplifiers

Utilizing the circuit designs perfected for recently introduced Quad Operational Amplifiers, these dual operational amplifiers feature low power drain, a common mode input voltage range extending to ground/V_{EE}, single supply or split supply operation and pinouts compatible with the popular MC1558 dual operational amplifier. The LM358 series is equivalent to one–half of an LM324.

These amplifiers have several distinct advantages over standard operational amplifier types in single supply applications. They can operate at supply voltages as low as 3.0 V or as high as 32 V, with quiescent currents about one–fifth of those associated with the MC1741 (on a per amplifier basis). The common mode input range includes the negative supply, thereby eliminating the necessity for external biasing components in many applications. The output voltage range also includes the negative power supply voltage.

- Short Circuit Protected Outputs
- True Differential Input Stage
- Single Supply Operation: 3.0 V to 32 V (LM258/LM358)
  3.0 V to 26 V (LM2904, V)
- Low Input Bias Currents
- Internally Compensated
- Common Mode Range Extends to Negative Supply
- Single and Split Supply Operation
- Similar Performance to the Popular MC1558
- ESD Clamps on the Inputs Increase Ruggedness of the Device without Affecting Operation

ON Semiconductor™

http://onsemi.com

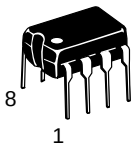

PDIP–8
N, AN, VN SUFFIX
CASE 626

SO–8
D, VD SUFFIX
CASE 751

PIN CONNECTIONS

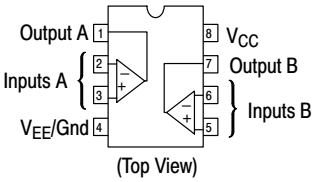

ORDERING INFORMATION

See detailed ordering and shipping information in the package dimensions section on page 9 of this data sheet.

DEVICE MARKING INFORMATION

See general marking information in the device marking section on page 10 of this data sheet.

March, 2001 – Rev. 3

Publication Order Number:
LM358/D

Single Supply **Split Supplies**

Figure 1.

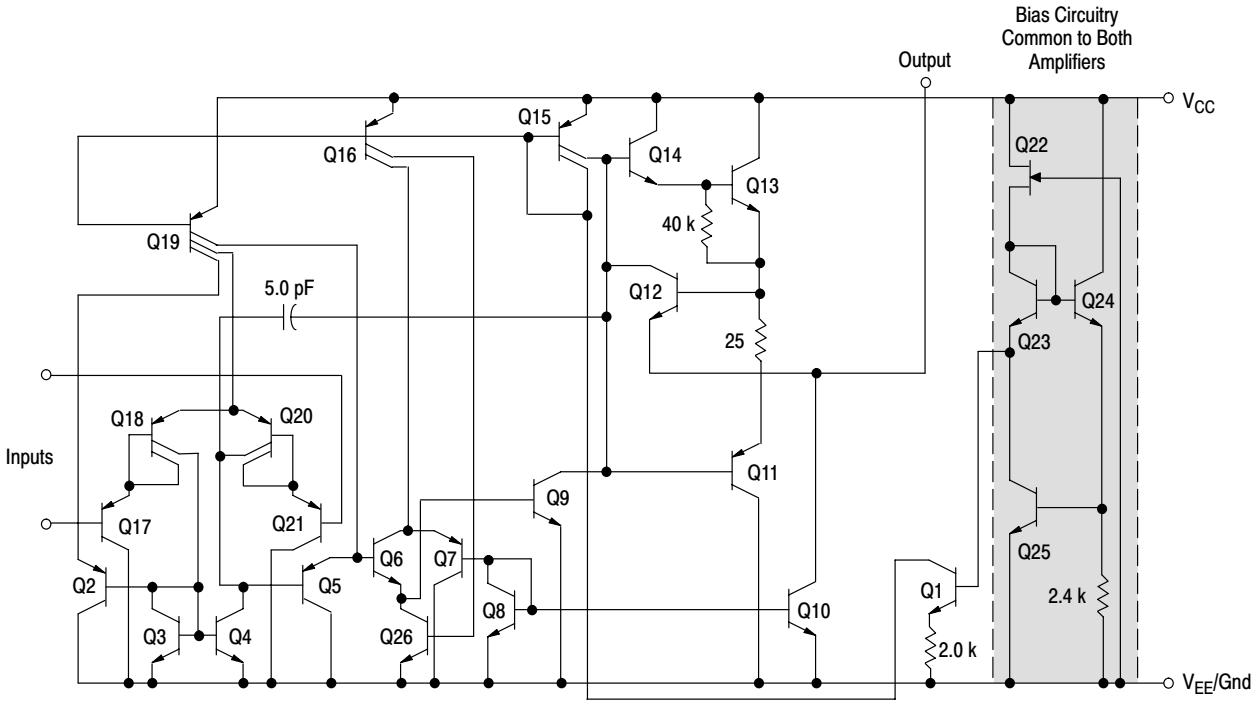

Figure 2. Representative Schematic Diagram
(One–Half of Circuit Shown)

MAXIMUM RATINGS (T_A = +25°C, unless otherwise noted.)

Rating	Symbol	LM258 LM358	LM2904 LM2904V	Unit
Power Supply Voltages Single Supply Split Supplies	 V_{CC} V_{CC}, V_{EE}	 32 ±16	 26 ±13	Vdc
Input Differential Voltage Range (Note 1.)	V_{IDR}	±32	±26	Vdc
Input Common Mode Voltage Range (Note 2.)	V_{ICR}	–0.3 to 32	–0.3 to 26	Vdc
Output Short Circuit Duration	t_{SC}	Continuous		
Junction Temperature	T_J	150		°C
Storage Temperature Range	T_{stg}	–55 to +125		°C
Operating Ambient Temperature Range LM258 LM358 LM2904/LM2904A LM2904V	T_A	 –25 to +85 0 to +70 – –	 – – –40 to +105 –40 to +125	°C

1. Split Power Supplies.
2. For Supply Voltages less than 32 V for the LM258/358 and 26 V for the LM2904, the absolute maximum input voltage is equal to the supply voltage.

ELECTRICAL CHARACTERISTICS (V_{CC} = 5.0 V, V_{EE} = Gnd, T_A = 25°C, unless otherwise noted.)

Characteristic	Symbol	LM258			LM358			Unit
		Min	Typ	Max	Min	Typ	Max	
Input Offset Voltage V_{CC} = 5.0 V to 30 V (26 V for LM2904, V), V_{IC} = 0 V to V_{CC} –1.7 V, $V_O \simeq$ 1.4 V, R_S = 0 Ω T_A = 25°C $T_A = T_{high}$ (Note 1.) $T_A = T_{low}$ (Note 1.)	V_{IO}	 – – –	 2.0 – –	 5.0 7.0 2.0	 – – –	 2.0 – –	 7.0 9.0 9.0	mV
Average Temperature Coefficient of Input Offset Voltage $T_A = T_{high}$ to T_{low} (Note 1.)	$\Delta V_{IO}/\Delta T$	–	7.0	–	–	7.0	–	μV/°C
Input Offset Current $T_A = T_{high}$ to T_{low} (Note 1.) Input Bias Current $T_A = T_{high}$ to T_{low} (Note 1.)	I_{IO} I_{IB}	– – – –	3.0 – –45 –50	30 100 –150 –300	– – – –	5.0 – –45 –50	50 150 –250 –500	nA
Average Temperature Coefficient of Input Offset Current $T_A = T_{high}$ to T_{low} (Note 1.)	$\Delta I_{IO}/\Delta T$	–	10	–	–	10	–	pA/°C
Input Common Mode Voltage Range (Note 2.),V_{CC} = 30 V (26 V for LM2904, V) V_{CC} = 30 V (26 V for LM2904, V), $T_A = T_{high}$ to T_{low}	V_{ICR}	0 0	– –	28.3 28	0 0	– –	28.3 28	V
Differential Input Voltage Range	V_{IDR}	–	–	V_{CC}	–	–	V_{CC}	V
Large Signal Open Loop Voltage Gain R_L = 2.0 kΩ, V_{CC} = 15 V, For Large V_O Swing, $T_A = T_{high}$ to T_{low} (Note 1.)	A_{VOL}	 50 25	 100 –	 – –	 25 15	 100 –	 – –	V/mV
Channel Separation 1.0 kHz ≤ f ≤ 20 kHz, Input Referenced	CS	–	–120	–	–	–120	–	dB
Common Mode Rejection R_S ≤ 10 kΩ	CMR	70	85	–	65	70	–	dB
Power Supply Rejection	PSR	65	100	–	65	100	–	dB
Output Voltage–High Limit $T_A = T_{high}$ to T_{low} (Note 1.) V_{CC} = 5.0 V, R_L = 2.0 kΩ, T_A = 25°C V_{CC} = 30 V (26 V for LM2904, V), R_L = 2.0 kΩ V_{CC} = 30 V (26 V for LM2904, V), R_L = 10 kΩ	V_{OH}	 3.3 26 27	 3.5 – 28	 – – –	 3.3 26 27	 3.5 – 28	 – – –	V
Output Voltage–Low Limit V_{CC} = 5.0 V, R_L = 10 kΩ, $T_A = T_{high}$ to T_{low} (Note 1.)	V_{OL}	–	5.0	20	–	5.0	20	mV
Output Source Current V_{ID} = +1.0 V, V_{CC} = 15 V	I_{O+}	20	40	–	20	40	–	mA
Output Sink Current V_{ID} = –1.0 V, V_{CC} = 15 V V_{ID} = –1.0 V, V_O = 200 mV	I_{O-}	 10 12	 20 50	 – –	 10 12	 20 50	 – –	 mA μA
Output Short Circuit to Ground (Note 3.)	I_{SC}	–	40	60	–	40	60	mA
Power Supply Current $T_A = T_{high}$ to T_{low} (Note 1.) V_{CC} = 30 V (26 V for LM2904, V), V_O = 0 V, R_L = ∞ V_{CC} = 5 V, V_O = 0 V, R_L = ∞	I_{CC}	 – –	 1.5 0.7	 3.0 1.2	 – –	 1.5 0.7	 3.0 1.2	mA

1. LM258: T_{low} = –25°C, T_{high} = +85°C
   LM358: T_{low} = 0°C, T_{high} = +70°C
   LM2904/LM2904A: T_{low} = –40°C, T_{high} = +105°C
   LM2904V: T_{low} = –40°C, T_{high} = +125°C
2. The input common mode voltage or either input signal voltage should not be allowed to go negative by more than 0.3 V. The upper end of the common mode voltage range is V_{CC} –1.7 V.
3. Short circuits from the output to V_{CC} can cause excessive heating and eventual destruction. Destructive dissipation can result from simultaneous shorts on all amplifiers.

ELECTRICAL CHARACTERISTICS (V_{CC} = 5.0 V, V_{EE} = Gnd, T_A = 25°C, unless otherwise noted.)

Characteristic	Symbol	LM2904			LM2904A			LM2904V			Unit
		Min	Typ	Max	Min	Typ	Max	Min	Typ	Max	
Input Offset Voltage V_{CC} = 5.0 V to 30 V (26 V for LM2904, V), V_{IC} = 0 V to V_{CC} –1.7 V, V_O ≃ 1.4 V, R_S = 0 Ω T_A = 25°C T_A = T_{high} (Note 4.) T_A = T_{low} (Note 4.)	V_{IO}	 – – –	 2.0 – –	 7.0 10 10	 – – –	 2.0 – –	 7.0 10 10	 – – –	 – – –	 – 13 10	mV
Average Temperature Coefficient of Input Offset Voltage T_A = T_{high} to T_{low} (Note 4.)	$\Delta V_{IO}/\Delta T$	–	7.0	–	–	7.0	–	–	7.0	–	μV/°C
Input Offset Current T_A = T_{high} to T_{low} (Note 4.) Input Bias Current T_A = T_{high} to T_{low} (Note 4.)	I_{IO} I_{IB}	– – – –	5.0 45 –45 –50	50 200 –250 –500	– – – –	5.0 45 –45 –50	50 200 –100 –250	– – – –	5.0 45 –45 –50	50 200 –250 –500	nA
Average Temperature Coefficient of Input Offset Current T_A = T_{high} to T_{low} (Note 4.)	$\Delta I_{IO}/\Delta T$	–	10	–	–	10	–	–	10	–	pA/°C
Input Common Mode Voltage Range (Note 5.), V_{CC} = 30 V (26 V for LM2904, V) V_{CC} = 30 V (26 V for LM2904, V), T_A = T_{high} to T_{low}	V_{ICR}	0 0	– –	24.3 24	0 0	– –	24.3 24	0 0	– –	24.3 24	V
Differential Input Voltage Range	V_{IDR}	–	–	V_{CC}	–	–	V_{CC}	–	–	V_{CC}	V
Large Signal Open Loop Voltage Gain R_L = 2.0 kΩ, V_{CC} = 15 V, For Large V_O Swing, T_A = T_{high} to T_{low} (Note 4.)	A_{VOL}	 25 15	 100 –	 – –	 25 15	 100 –	 – –	 25 15	 100 –	 – –	V/mV
Channel Separation 1.0 kHz ≤ f ≤ 20 kHz, Input Referenced	CS	–	–120	–	–	–120	–	–	–120	–	dB
Common Mode Rejection R_S ≤ 10 kΩ	CMR	50	70	–	50	70	–	50	70	–	dB
Power Supply Rejection	PSR	50	100	–	50	100	–	50	100	–	dB
Output Voltage–High Limit T_A = T_{high} to T_{low} (Note 4.) V_{CC} = 5.0 V, R_L = 2.0 kΩ, T_A = 25°C V_{CC} = 30 V (26 V for LM2904, V), R_L = 2.0 kΩ V_{CC} = 30 V (26 V for LM2904, V), R_L = 10 kΩ	V_{OH}	 3.3 22 23	 3.5 – 24	 – – –	 3.3 22 23	 3.5 – 24	 – – –	 3.3 22 23	 3.5 – 24	 – – –	V
Output Voltage–Low Limit V_{CC} = 5.0 V, R_L = 10 kΩ, T_A = T_{high} to T_{low} (Note 4.)	V_{OL}	–	5.0	20	–	5.0	20	–	5.0	20	mV
Output Source Current V_{ID} = +1.0 V, V_{CC} = 15 V	I_{O+}	20	40	–	20	40	–	20	40	–	mA
Output Sink Current V_{ID} = –1.0 V, V_{CC} = 15 V V_{ID} = –1.0 V, V_O = 200 mV	I_{O-}	 10 –	 20 –	 – –	 10 –	 20 –	 – –	 10 –	 20 –	 – –	 mA μA
Output Short Circuit to Ground (Note 6.)	I_{SC}	–	40	60	–	40	60	–	40	60	mA
Power Supply Current T_A = T_{high} to T_{low} (Note 4.) V_{CC} = 30 V (26 V for LM2904, V), V_O = 0 V, R_L = ∞ V_{CC} = 5 V, V_O = 0 V, R_L = ∞	I_{CC}	 – –	 1.5 0.7	 3.0 1.2	 – –	 1.5 0.7	 3.0 1.2	 – –	 1.5 0.7	 3.0 1.2	mA

4. LM258: T_{low} = –25°C, T_{high} = +85°C
   LM358: T_{low} = 0°C, T_{high} = +70°C
   LM2904/LM2904A: T_{low} = –40°C, T_{high} = +105°C
   LM2904V: T_{low} = –40°C, T_{high} = +125°C
5. The input common mode voltage or either input signal voltage should not be allowed to go negative by more than 0.3 V. The upper end of the common mode voltage range is V_{CC} –1.7 V.
6. Short circuits from the output to V_{CC} can cause excessive heating and eventual destruction. Destructive dissipation can result from simultaneous shorts on all amplifiers.

CIRCUIT DESCRIPTION

The LM358 series is made using two internally compensated, two–stage operational amplifiers. The first stage of each consists of differential input devices Q20 and Q18 with input buffer transistors Q21 and Q17 and the differential to single ended converter Q3 and Q4. The first stage performs not only the first stage gain function but also performs the level shifting and transconductance reduction functions. By reducing the transconductance, a smaller compensation capacitor (only 5.0 pF) can be employed, thus saving chip area. The transconductance reduction is accomplished by splitting the collectors of Q20 and Q18. Another feature of this input stage is that the input common mode range can include the negative supply or ground, in single supply operation, without saturating either the input devices or the differential to single–ended converter. The second stage consists of a standard current source load amplifier stage.

Each amplifier is biased from an internal–voltage regulator which has a low temperature coefficient thus giving each amplifier good temperature characteristics as well as excellent power supply rejection.

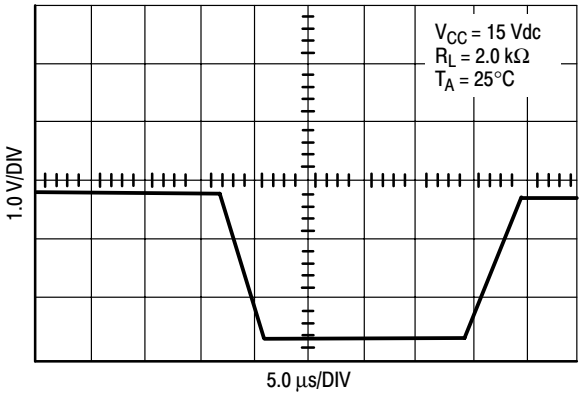

Figure 3. Large Signal Voltage Follower Response

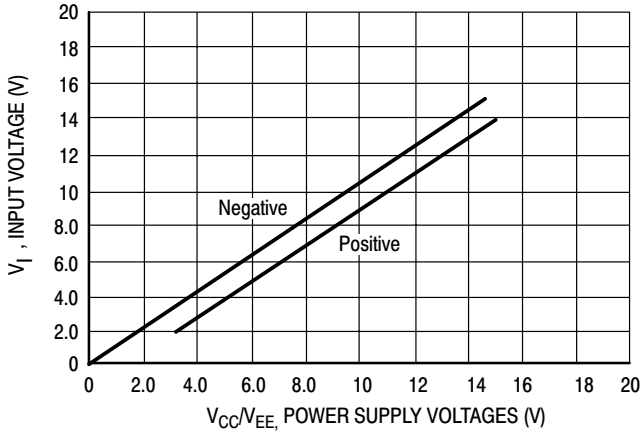

Figure 4. Input Voltage Range

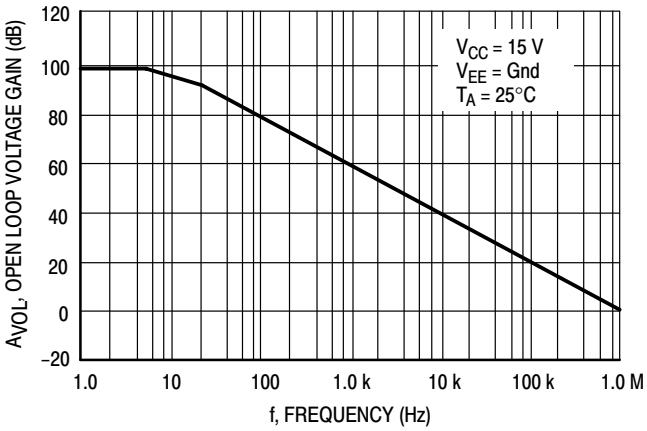

Figure 5. Large–Signal Open Loop Voltage Gain

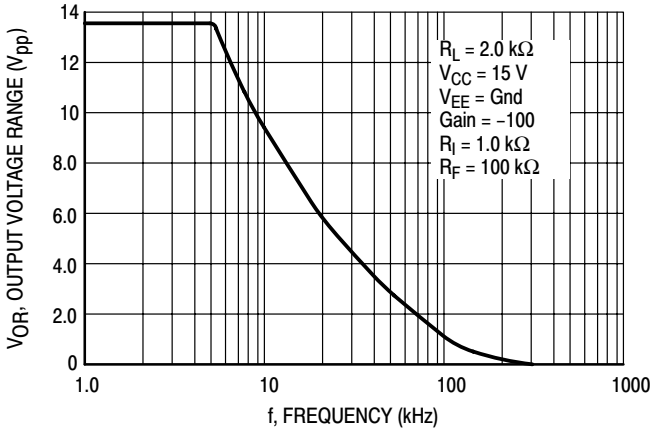

Figure 6. Large−Signal Frequency Response

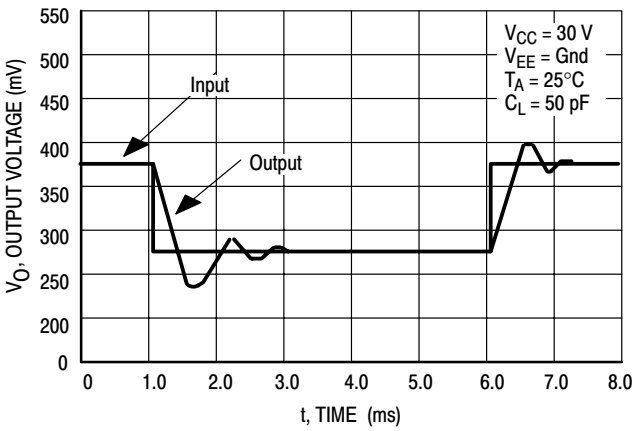

Figure 7. Small Signal Voltage Follower Pulse Response (Noninverting)

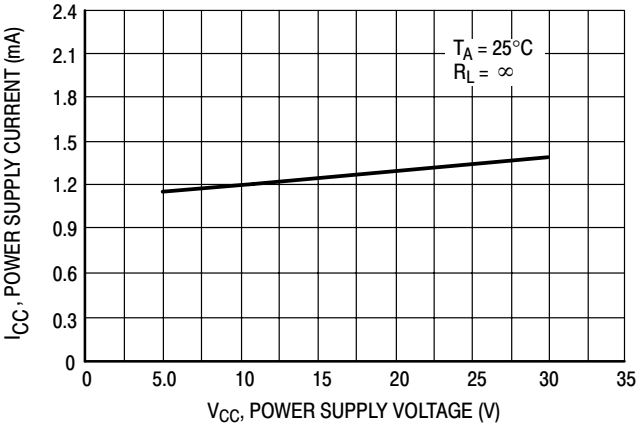

Figure 8. Power Supply Current versus Power Supply Voltage

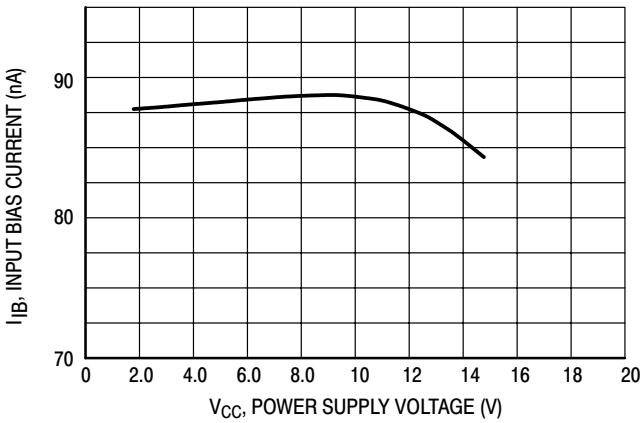

Figure 9. Input Bias Current versus Supply Voltage

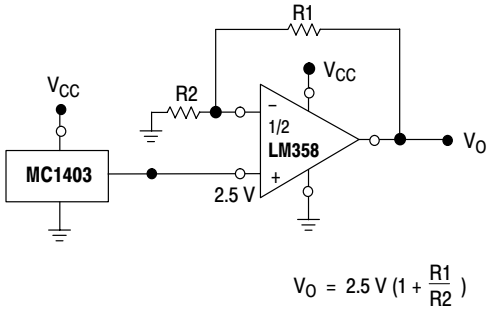

Figure 10. Voltage Reference

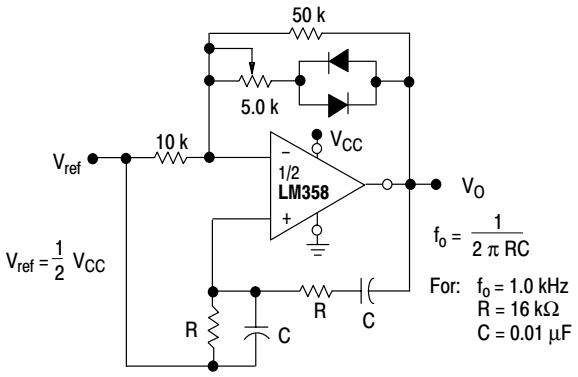

Figure 11. Wien Bridge Oscillator

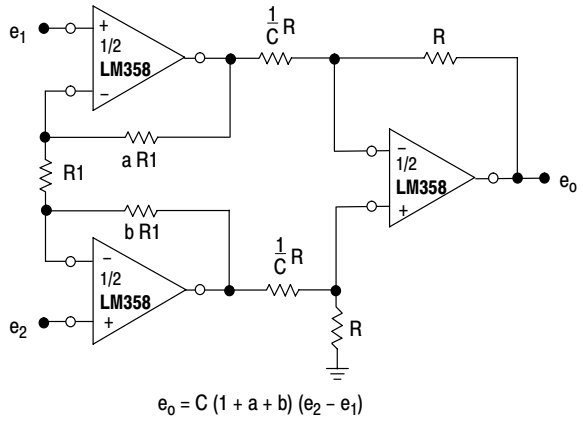

Figure 12. High Impedance Differential Amplifier

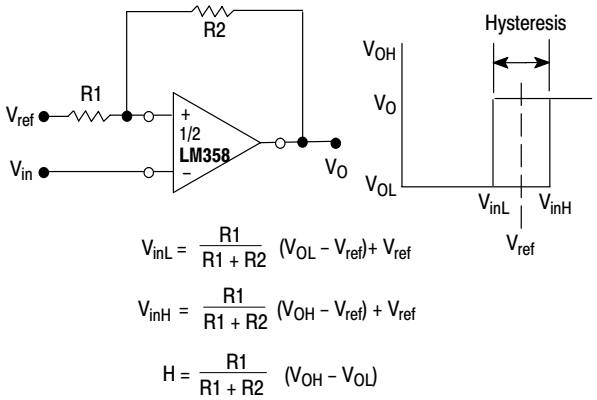

Figure 13. Comparator with Hysteresis

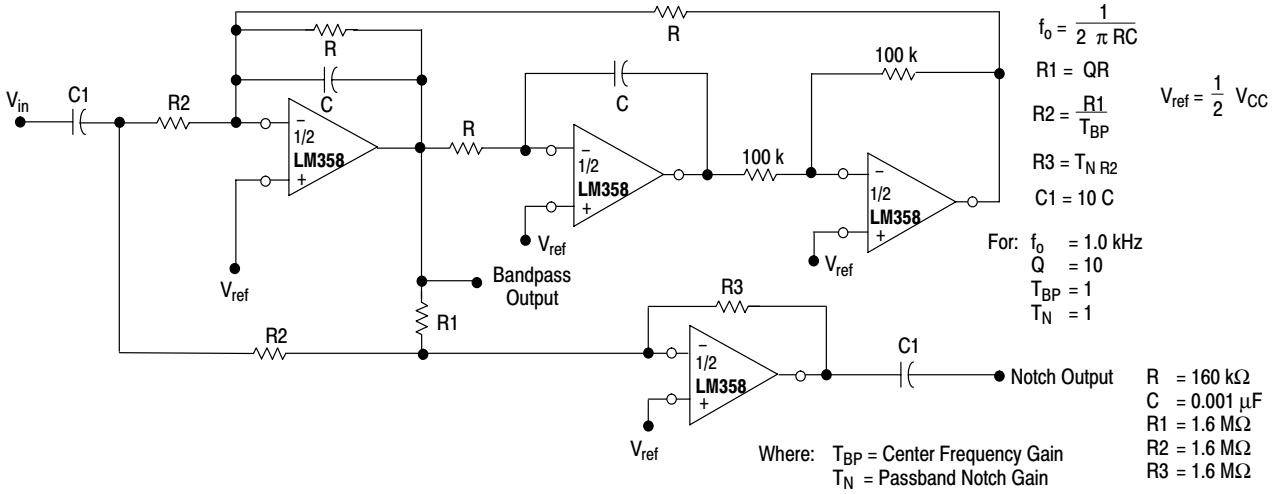

Figure 14. Bi−Quad Filter

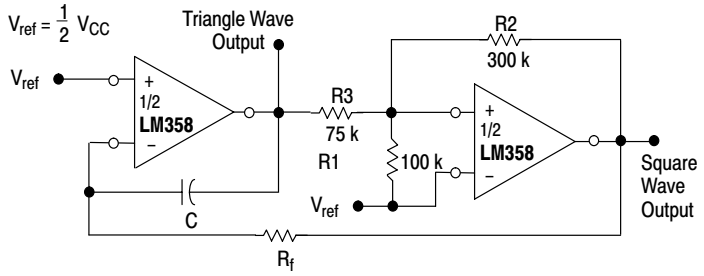

$$f = \frac{R1 + R_C}{4\,CR_f\,R1} \quad \text{if, } R3 = \frac{R2\,R1}{R2 + R1}$$

Figure 15. Function Generator

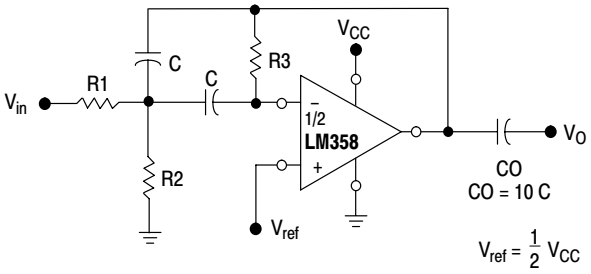

Given: f_o = center frequency

$A(f_o)$ = gain at center frequency

Choose value f_o, C

Then: $R3 = \frac{Q}{\pi f_o C}$

$R1 = \frac{R3}{2\,A(f_o)}$

$R2 = \frac{R1\,R3}{4Q^2\,R1 - R3}$

For less than 10% error from operational amplifier. $\frac{Q_o f_o}{BW} < 0.1$

Where f_o and BW are expressed in Hz.

If source impedance varies, filter may be preceded with voltage follower buffer to stabilize filter parameters.

Figure 16. Multiple Feedback Bandpass Filter

ORDERING INFORMATION

Device	Package	Operating Temperature Range	Shipping
LM358D	SO–8	0° to +70°C	98 Units/Rail
LM358DR2	SO–8		2500 Tape & Reel
LM358N	PDIP–8		50 Units/Rail
LM258D	SO–8	–25° to +85°C	98 Units/Rail
LM258DR2	SO–8		2500 Tape & Reel
LM258N	PDIP–8		50 Units/Rail
LM2904D	SO–8	–40° to +105°C	98 Units/Rail
LM2904DR2	SO–8		2500 Tape & Reel
LM2904N	PDIP–8		50 Units/Rail
LM2904AN	PDIP–8		50 Units/Rail
LM2904VD	SO–8	–40° to +125°C	98 Units/Rail
LM2904VDR2	SO–8		2500 Tape & Reel
LM2904VN	PDIP–8		50 Units/Rail

MARKING DIAGRAMS

PDIP−8
N SUFFIX
CASE 626

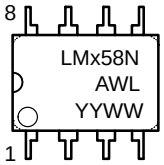

PDIP−8
AN SUFFIX
CASE 626

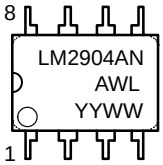

PDIP−8
N SUFFIX
CASE 626

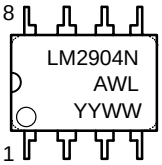

PDIP−8
VN SUFFIX
CASE 626

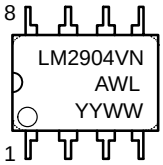

SO−8
D SUFFIX
CASE 751

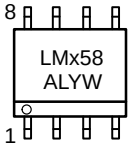

SO−8
D SUFFIX
CASE 751

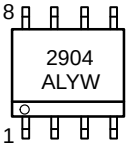

SO−8
VD SUFFIX
CASE 751

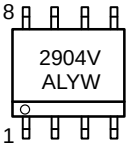

x	= 2 or 3
A	= Assembly Location
WL, L	= Wafer Lot
YY, Y	= Year
WW, W	= Work Week

PACKAGE DIMENSIONS

PDIP–8
N, AN, VN SUFFIX
CASE 626–05
ISSUE L

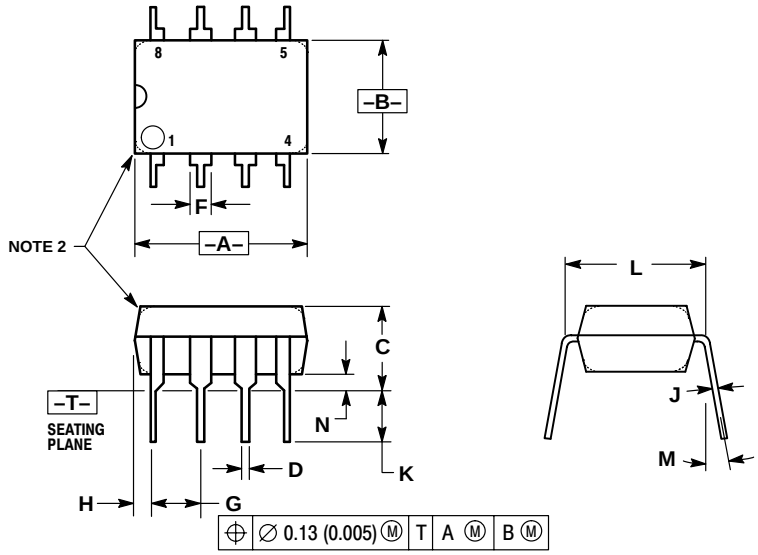

NOTES:
1. DIMENSION L TO CENTER OF LEAD WHEN FORMED PARALLEL.
2. PACKAGE CONTOUR OPTIONAL (ROUND OR SQUARE CORNERS).
3. DIMENSIONING AND TOLERANCING PER ANSI Y14.5M, 1982.

	MILLIMETERS		INCHES	
DIM	MIN	MAX	MIN	MAX
A	9.40	10.16	0.370	0.400
B	6.10	6.60	0.240	0.260
C	3.94	4.45	0.155	0.175
D	0.38	0.51	0.015	0.020
F	1.02	1.78	0.040	0.070
G	2.54 BSC		0.100 BSC	
H	0.76	1.27	0.030	0.050
J	0.20	0.30	0.008	0.012
K	2.92	3.43	0.115	0.135
L	7.62 BSC		0.300 BSC	
M	---	10°	---	10°
N	0.76	1.01	0.030	0.040

SO–8
D, VD SUFFIX
CASE 751–07
ISSUE W

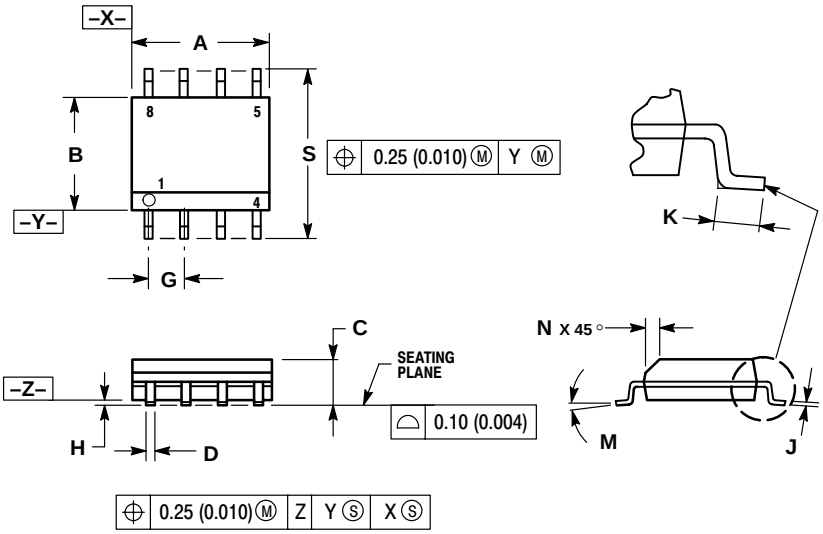

NOTES:
1. DIMENSIONING AND TOLERANCING PER ANSI Y14.5M, 1982.
2. CONTROLLING DIMENSION: MILLIMETER.
3. DIMENSION A AND B DO NOT INCLUDE MOLD PROTRUSION.
4. MAXIMUM MOLD PROTRUSION 0.15 (0.006) PER SIDE.
5. DIMENSION D DOES NOT INCLUDE DAMBAR PROTRUSION. ALLOWABLE DAMBAR PROTRUSION SHALL BE 0.127 (0.005) TOTAL IN EXCESS OF THE D DIMENSION AT MAXIMUM MATERIAL CONDITION.

	MILLIMETERS		INCHES	
DIM	MIN	MAX	MIN	MAX
A	4.80	5.00	0.189	0.197
B	3.80	4.00	0.150	0.157
C	1.35	1.75	0.053	0.069
D	0.33	0.51	0.013	0.020
G	1.27 BSC		0.050 BSC	
H	0.10	0.25	0.004	0.010
J	0.19	0.25	0.007	0.010
K	0.40	1.27	0.016	0.050
M	0°	8°	0°	8°
N	0.25	0.50	0.010	0.020
S	5.80	6.20	0.228	0.244

PUBLICATION ORDERING INFORMATION

NORTH AMERICA Literature Fulfillment:
Literature Distribution Center for ON Semiconductor
P.O. Box 5163, Denver, Colorado 80217 USA
Phone: 303–675–2175 or 800–344–3860 Toll Free USA/Canada
Fax: 303–675–2176 or 800–344–3867 Toll Free USA/Canada
Email: ONlit@hibbertco.com
Fax Response Line: 303–675–2167 or 800–344–3810 Toll Free USA/Canada

N. American Technical Support: 800–282–9855 Toll Free USA/Canada

EUROPE: LDC for ON Semiconductor – European Support
German Phone: (+1) 303–308–7140 (Mon–Fri 2:30pm to 7:00pm CET)
Email: ONlit–german@hibbertco.com
French Phone: (+1) 303–308–7141 (Mon–Fri 2:00pm to 7:00pm CET)
Email: ONlit–french@hibbertco.com
English Phone: (+1) 303–308–7142 (Mon–Fri 12:00pm to 5:00pm GMT)
Email: ONlit@hibbertco.com

EUROPEAN TOLL–FREE ACCESS*: 00–800–4422–3781
*Available from Germany, France, Italy, UK, Ireland

CENTRAL/SOUTH AMERICA:
Spanish Phone: 303–308–7143 (Mon–Fri 8:00am to 5:00pm MST)
Email: ONlit–spanish@hibbertco.com
Toll–Free from Mexico: Dial 01–800–288–2872 for Access – then Dial 866–297–9322

ASIA/PACIFIC: LDC for ON Semiconductor – Asia Support
Phone: 303–675–2121 (Tue–Fri 9:00am to 1:00pm, Hong Kong Time)
Toll Free from Hong Kong & Singapore:
001–800–4422–3781
Email: ONlit–asia@hibbertco.com

JAPAN: ON Semiconductor, Japan Customer Focus Center
4–32–1 Nishi–Gotanda, Shinagawa–ku, Tokyo, Japan 141–0031
Phone: 81–3–5740–2700
Email: r14525@onsemi.com

ON Semiconductor Website: http://onsemi.com

For additional information, please contact your local Sales Representative.