5×7 dots+ cursol DM0816

(8 Characters × 1 Line) 1/8 Duty

SANYO SEMICONDUCTOR CORP

Absolute maximum ratings

Parameter	Symbol	min.	max.	unit
Logic supply voltage	$V_{DD}-V_{SS}$	−0.3	7.0	V
LCD supply voltage	$V_{DD}-V_O$	−0.3	13.5	V
Input voltage	V_I	−0.3	$V_{DD}+0.3$	V
Operating temperature	T_{opg}	0	+50	°C
Storage temperature	T_{stg}	−20	+70	°C

Electrical characteristics (Ta=25°C, V_{DD}=5.0±0.25V)

Parameter	Symbol	Condition	min.	typ.	max.	unit
Input high-level voltage	V_{IH}	—	2.2	—	V_{DD}	V
Input low-level voltage	V_{IL}	—	0	—	0.6	V
Output high-level voltage	V_{OH}	$-I_{OH}$=0.2mA	2.4	—	V_{DD}	V
Output low-level voltage	V_{OL}	I_{OL}=1.2mA	0	—	0.4	V
Supply current	I_{DD}	—	—	1.5	3.0	mA

Pin function

No	Symbol	Function
1	DB 4	Data bus line (Upper 4 bits)
2	DB 5	＊When interface data is 4 bits
3	DB 6	long, data is transferred
4	DB 7	using only 4 buses of DB4 to DB7.
5	RS	Data/instruction select input pin
6	R/W	Read/write select input pin
7	E	Enable input pin
8	NC	
9	DB 0	Data bus line (Lower 4 bits)
10	DB 1	
11	DB 2	
12	DB 3	
13	NC	
14	V_{SS}	Gnd pin,OV
15	V_{DD}	LCD drive voltage input pin
16	V_O	Positive power pin, +5V

Block diagram

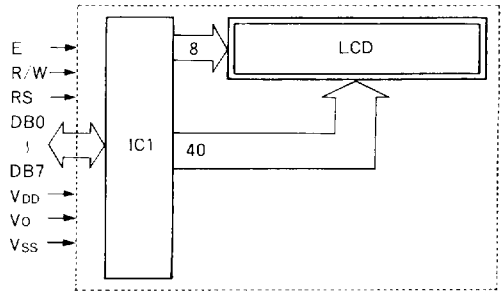

Module dimensions

(unit : mm)

■Pattern dimensions

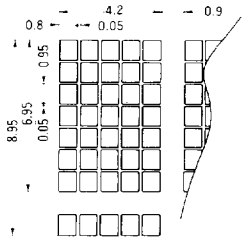

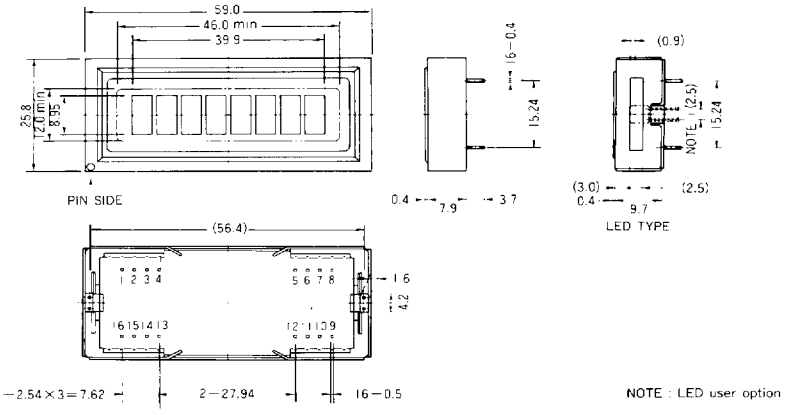

Powered by ICminer.com Electronic-Library Service CopyRight 2003