5V Step-Down Switching Regulator

FEATURES

- Fixed 5V Output
- 2A On-Board Switch
- 100kHz Switching Frequency
- 2% Output Voltage Tolerance Over Temperature
- Greatly Improved Dynamic Behavior
- Available in Low Cost 5- and 7-Lead Packages
- Only 9.5mA Quiescent Current
- Operates Up to 60V Input

APPLICATIONS

- 5V Output Buck Converter
- Tapped Inductor Buck Converter with 4A Output at 5V
- Positive-to-Negative Converter

DESCRIPTION

The LT1076-5 is a 2A fixed 5V output monolithic bipolar switching regulator which requires only a few external parts for normal operation. The power switch, all oscillator and control circuitry, all current limit components, and an output monitor are included on the chip. The topology is a classic positive "buck" configuration but several design innovations allow this device to be used as a positive-to-negative converter, a negative boost converter, and as a flyback converter. The switch output is specified to swing 40V below ground, allowing the LT1076-5 to drive a tapped inductor in the buck mode with output currents up to 4A.

The LT1076-5 uses a true analog multiplier in the feedback loop. This makes the device respond nearly instantaneously to input voltage fluctuations and makes loop gain independent of input voltage. As a result, dynamic behavior of the regulator is significantly improved over previous designs.

On-chip pulse by pulse current limiting makes the LT1076-5 nearly bust-proof for output overloads or shorts. The input voltage range as a buck converter is 8V to 60V, but a self-boot feature allows input voltages as low as 5V in the inverting and boost configurations.

The LT1076-5 is available in a low cost 5- and 7-lead TO-220 packages with frequency pre-set at 100kHz and current limit at 2.6A. See Application Note 44 for design details.

TYPICAL APPLICATION

Basic Positive Buck Converter

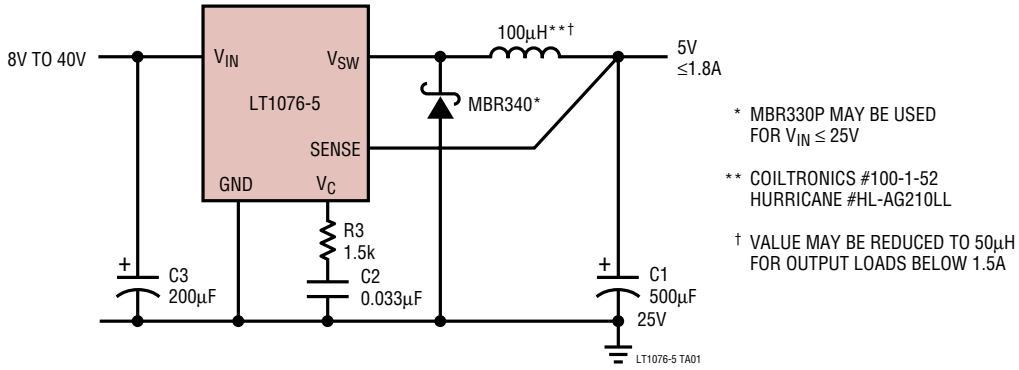

ABSOLUTE MAXIMUM RATINGS

(Note 1)

Input Voltage
- LT1076-5 ..... 45V
- LT1076HV-5 ..... 64V

Switch Voltage with Respect to Input Voltage
- LT1076-5 ..... 64V
- LT1076HV-5 ..... 75V

Switch Voltage with Respect to Ground Pin (V_{SW} **Negative**)
- LT1076-5 (Note 6) 35V
- LT1076HV-5 (Note 6) 45V

Sense Pin Voltage ..... –2V, 10V

Maximum Operating Ambient Temperature Range
- LT1076C-5, LT1076HVC-5 ..... 0°C to 70°C
- LT1076I-5, LT1076HVI-5 ..... –40°C to 85°C

Maximum Operating Junction Temperature Range
- LT1076C-5, LT1076HVC-5 ..... 0°C to 125°C
- LT1076I-5, LT1076HVI-5 ..... –40°C to 125°C

Maximum Storage Temperature ..... –65°C to 150°C

Lead Temperature (Soldering, 10 sec) ..... 300°C

PACKAGE/ORDER INFORMATION

	ORDER PART NUMBER
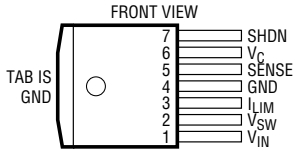 R PACKAGE 7-LEAD PLASTIC DD θ_{JC} = 4°C, θ_{JA} = 30°C/W	LT1076CR-5
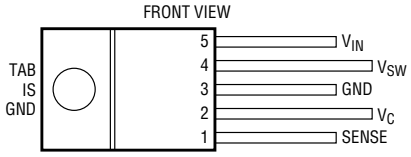 T PACKAGE 5-LEAD PLASTIC TO-220 LEADS ARE FORMED STANDARD FOR STRAIGHT LEADS, ORDER FLOW 06 θ_{JC} = 4°C, θ_{JA} = 50°C/W	LT1076CT-5 LT1076HVCT-5 LT1076IT-5 LT1076HVIT-5
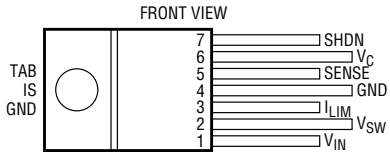 Y PACKAGE 7-LEAD PLASTIC TO-220 θ_{JC} = 4°C, θ_{JA} = 50°C/W	LT1076CT7-5

Consult LTC Marketing for parts specified with wider operating temperature ranges.

ELECTRICAL CHARACTERISTICS

The ● denotes the specifications which apply over the full operating temperature range, otherwise specifications are at T_J = 25°C. V_{IN} = 25V, unless otherwise noted.

PARAMETER	CONDITIONS		MIN	TYP	MAX	UNITS
Switch "On" Voltage (Note 2)	I_{SW} = 0.5A I_{SW} = 2A	● ●			1.2 1.7	V V
Switch "Off" Leakage	V_{IN} = 25V, V_{SW} = 0 V_{IN} = V_{MAX}, V_{SW} = 0 (Note 7)				150 250	µA µA
Supply Current (Note 3)	V_{OUT} = 5.5V, $V_{IN} \le$ 40V 40V < V_{IN} < 60V V_{SHDN} = 0.1V (Device Shutdown) (Note 9)	● ●		8.5 9.0 140	11 12 300	mA mA µA
Minimum Supply Voltage	Normal Mode Start-Up Mode (Note 4)	● ●		7.3 3.5	8.0 4.8	V V
Switch Current Limit (Note 5)	I_{LIM} = Open R_{LIM} = 10k (Note 10) R_{LIM} = 7k (Note 10)	●	2	2.6 1.8 1.2	3.2	A A A
Maximum Duty Cycle		●	85	90		%
Switching Frequency	 $T_J \le$ 125°C V_{OUT} = V_{SENSE} = 0V (Note 5)	 ● 	90 85 	100 20	110 120 	kHz kHz kHz
Switching Frequency Line Regulation	8V $\le V_{IN} \le V_{MAX}$ (Note 8)	●		0.03	0.1	%/V
Error Amplifier Voltage Gain (Note 8)	1V $\le V_C \le$ 4V			2000		V/V
Error Amplifier Transconductance (Note 8)			3700	5000	8000	µmho

ELECTRICAL CHARACTERISTICS

The ● denotes the specifications which apply over the full operating temperature range, otherwise specifications are at T_J = 25°C. V_{IN} = 25V, unless otherwise noted.

PARAMETER	CONDITIONS		MIN	TYP	MAX	UNITS
Error Amplifier Source and Sink Current	Source (V_{SENSE} = 4.5V) Sink (V_{SENSE} = 5.5V)		100 0.7	140 1.0	225 1.6	µA mA
Sense Pin Divider Resistance			3	5	8	kΩ
Sense Voltage	V_C = 2V	●	4.85	5	5.15	V
Output Voltage Tolerance	V_{OUT} (Nominal) = 5V All Conditions of Input Voltage, Output Voltage, Temperature and Load Current	 ●		±0.5 ±1.0	±2 ±3	% %
Output Voltage Line Regulation	8V ≤ V_{IN} ≤ V_{MAX} (Note 7)	●		0.005	0.02	%/V
V_C Voltage at 0% Duty Cycle	 Over Temperature	 ●		1.5 –4.0		V mV/°C
Multiplier Reference Voltage				24		V
Shutdown Pin Current	V_{SHDN} = 5V V_{SHDN} ≤ $V_{THRESHOLD}$ (≅ 2.5V)		5	10	20 50	µA µA
Shutdown Thresholds	Switch Duty Cycle = 0 Fully Shut Down		2.2 0.1	2.45 0.30	2.7 0.5	V V
Thermal Resistance Junction to Case					4	°C/W

Note 1: Absolute Maximum Ratings are those values beyond which the life of a device ay be impaired.

Note 2: To calculate maximum switch "on" voltage at currents between low and high conditions, a linear interpolation may be used.

Note 3: A sense pin voltage (V_{SENSE}) of 5.5V forces the V_C pin to its low clamp level and the switch duty cycle to zero. This approximates the zero load condition where duty cycle approaches zero.

Note 4: Total voltage from V_{IN} pin to ground pin must be ≥8V after start-up for proper regulation. For T_A < 25°C, limit = 5V.

Note 5: Switch frequency is internally scaled down when the sense pin voltage is less than 2.6V to avoid extremely short switch on times. During current limit testing, V_{SENSE} is adjusted to give a minimum switch on time of 1µs.

Note 6: Switch to input voltage limitation must also be observed.

Note 7: V_{MAX} = 40V for the LT1076-5 and 60V for the LT1076HV-5.

Note 8: Error amplifier voltage gain and transconductance are specified relative to the internal feedback node. To calculate gain and transconductance from the Sense pin (Output) to the V_C pin, multiply by 0.44.

Note 9: Does not include switch leakage.

Note 10: $I_{LIM} \approx \frac{R_{LIM} - 1k}{5k}$

PACKAGE DESCRIPTION

R Package
7-Lead Plastic DD Pak
(Reference LTC DWG # 05-08-1462)

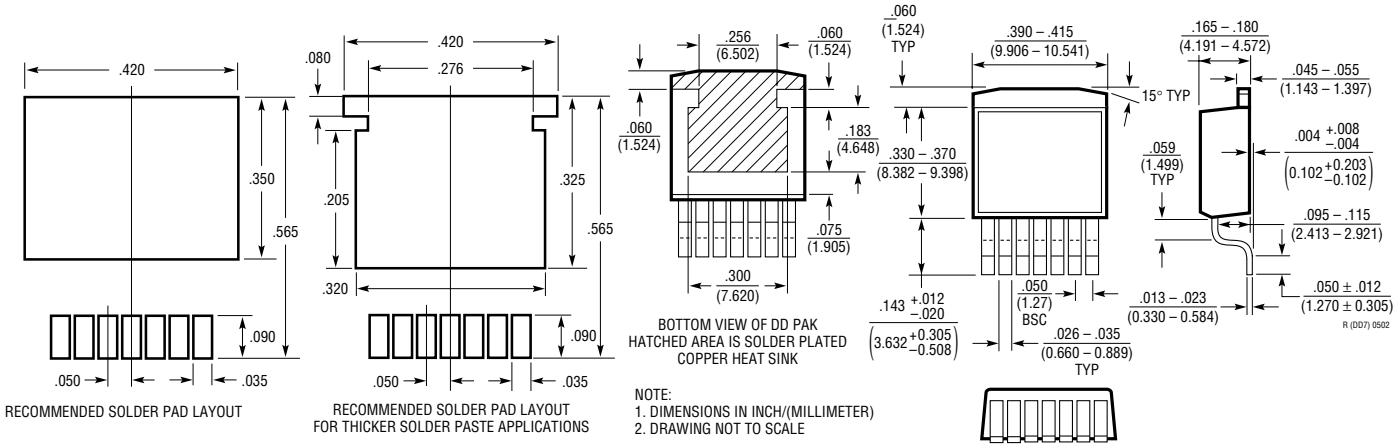

10765fb

PACKAGE DESCRIPTION

T Package
5-Lead Plastic TO-220 (Standard)
(Reference LTC DWG # 05-08-1421)

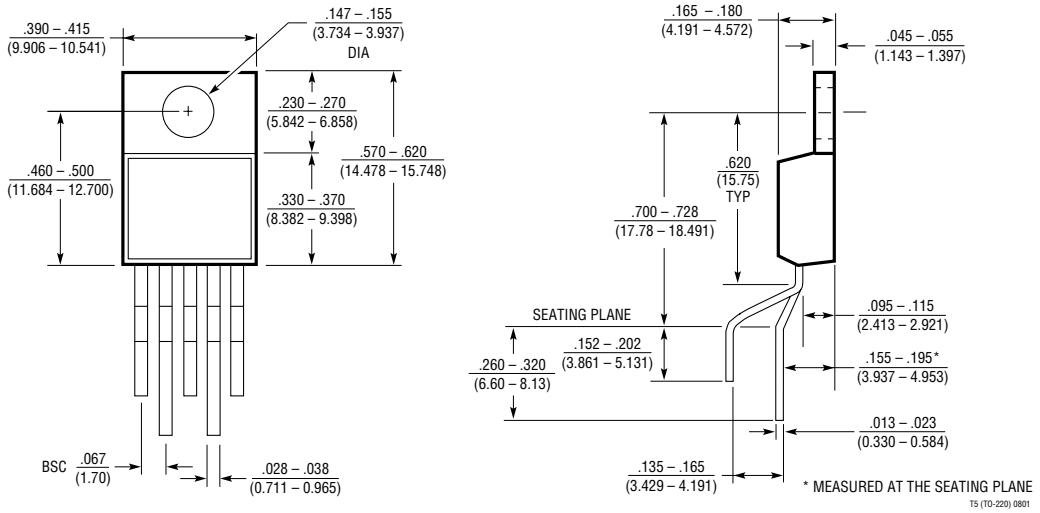

T7 Package
7-Lead Plastic TO-220 (Standard)
(Reference LTC DWG # 05-08-1422)

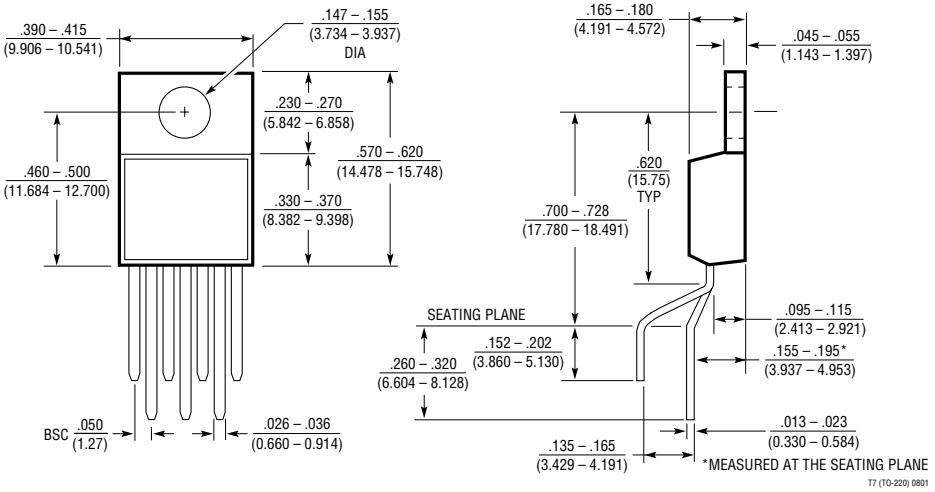

RELATED PARTS

PART NUMBER	DESCRIPTION	COMMENTS
LT1074/HV	4.4A (I_{OUT}), 100kHz High Efficiency Step-Down DC/DC Converter	V_{IN}: 7.3V to 45V/64V, $V_{OUT(MIN)}$: 2.21V, I_Q: 8.5mA, I_{SHDN}: 10µA, DD5/7, TO-2205/7
LT3430	60V, 2.75A (I_{OUT}), 200kHz High Efficiency Step-Down DC/DC Converter	V_{IN}: 5.5V to 60V, $V_{OUT(MIN)}$: 1.20V, I_Q: 2.5mA, I_{SHDN}: 25µA, TSSOP16E
LT1956	60V, 1.2A (I_{OUT}), 500kHz High Efficiency Step-Down DC/DC Converter	V_{IN}: 5.5V to 60V, $V_{OUT(MIN)}$: 1.20V, I_Q: 2.5mA, I_{SHDN}: 25µA, TSSOP16E

Linear Technology Corporation
1630 McCarthy Blvd., Milpitas, CA 95035-7417
(408) 432-1900 • FAX: (408) 434-0507 • www.linear.com
LT/TP 1102 1K REV B • PRINTED IN USA