H5D Differential Heavy Duty Optical Shaft Encoder

Description:

The **H5D** differential optical incremental encoder is fully assembled with a shaft, two 1/4" ID by 1/2" OD heavy duty ball bearings and a mounting plate. This design tolerates increased radial and axial loads. This design also allows for an optional rear shaft extension. The mounting plate comes with 2 mounting holes for screws #6 or smaller.

The mating connector has 10 pins, is polarized and latches into the encoder. Depressing the latch tab allows the connector to be unplugged.

Mating connector assemblies are available from US Digital stock as shown on the **Cables & Connectors** data sheet. Custom cables are also readily available.

The **H5D** has an internal differential line driver (26C31) that can source and sink 20mA at TTL levels. The cable that connects to this encoder should have 3 twisted pairs plus power and ground. Group each pair of differential signals. The recommended receiver is industry standard 26C32. Maximum noise immunity is achieved when the differential receiver has a 110 Ohm resistor in series with a .0047mf capacitor placed across each differential pair. The capacitor simply conserves power; otherwise power consumption would increase by 45mA per pair, or 140 mA for 3 pairs.

Electrical Specifications:
B leads A in a clockwise shaft rotation, and A leads B in counterclockwise shaft rotation viewed from the shaft side of the **H5D**. For complete details see the **HEDS** data sheet.

Features:

- Small size
- Low cost
- Optional Agilent compatible pin-out
- Positive finger-latching polarized connector
- 2-channel quadrature, TTL squarewave outputs
- 3rd channel index option
- Differential line driver outputs
- Tracks from 0 to 100,000 cycles/sec
- Heavy duty ball bearings track up to 10,000 RPM
- -40 to +100°C operating temperature
- Single +5VDC supply
- US Digital warrants its products against defects and workmanship for two years. See complete warranty for details.

Pin Descriptions:

Pin	Standard	Agilent (L-option)
1	Ground	No connection
2	Ground	+5VDC power
3	Index-	Ground
4	Index+	No connection
5	A- channel	A- channel
6	A+ channel	A+ channel
7	+5VDC power	B- channel
8	+5VDC power	B+ channel
9	B- channel	Index-
10	B+ channel	Index+

Mechanical Specifications:

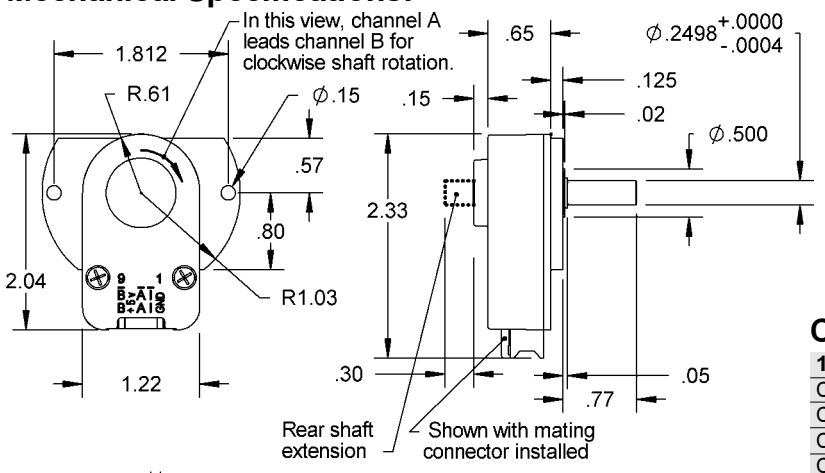

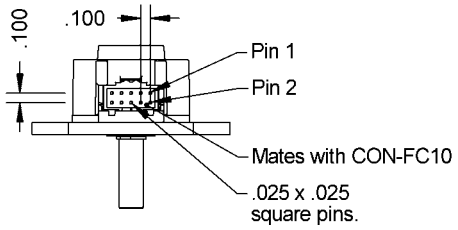

Mechanical Notes:

Shaft speed	10,000 RPM max. continuous
Acceleration	250,000 rad/sec^2
Shaft torque	0.05 in. oz. max.
Shaft loading	2 lbs. max.
Bearing life	(90/P)^3 - life in millions of revs.
Weight	1.83 oz.
Shaft runout	.0006 T.I.R. max.
Moment of inertia	.0001 oz. in. s^2
Vibration	20 g. 5 to 2KHz

Compatible Cables & Connectors:

10-pin Finger-latching:	
CON-FC10	Connector
CA-3619	Connector on both ends of a 6' shielded round cable
CA-3807	Same as CA-3619, but for **L**-option only
CA-4217	Connector on one end with a 6' shielded round cable
Note: See **Cables & Connectors** data sheet for more information.	

Electrical Notes:

Specification	Min.	Typ.	Max.	Units	Notes
Supply	4.5	5	5.5	Volts	
Current consumption					
index	-	65	95	mA	no load
non-index <1000 CPR	-	25	50	mA	no load
non-index =>1000 CPR	-	65	95	mA	no load
Output voltage					
sourcing to +5	2.4	3.4	-	Volts	@ -20mA
sinking to ground	-	0.4	0.8	Volts	@ 20mA

Ordering Information:

H5D - [ ] — [ ]

CPR:

50	200	500
96	250	540*
100	256	1000*
110*	360	1016*
120*	400	1024*
192*		

Options:**
I = Index (3rd channel).
L = Agilent compatible pin-out.
E = Rear shaft extension.

Notes:
* Index option not available.
** Specify options in order shown.

H5D Price:
$69 / 1
$66 / 10
$62 / 50
$59 / 100
$57 / 500
$53 / 1000

Cost Modifiers:
- Add $9 for index and/or resolutions =>1000 CPR.
- Add $2 for **E**-option.

Technical Data, Rev. 08.07.01, August 2001
All information subject to change without notice.

US Digital™ Corporation
phone: 360.260.2468 • sales: 800.736.0194 • fax: 360.260.2469
email: sales@usdigital.com • website: www.usdigital.com
11100 ne 34th circle • vancouver, washington 98682 USA