HD404829R Series

AS Microcomputer Incorporating a LCD controller/Driver Circuit

HITACHI

ADE-202-057C
Rev.4
Sept. 1999

Description

The HD404829R series incorporates an 8-bit A/D converter (four channels), a Liquid Crystal Display (LCD) and a serial interface, and has large-current Input/Output (I/O) pins. The series is a 4-bit single-chip microcomputer best used in the AV equipment such as CD radio cassette tape recorders which require the LCD display control.

The HD404829R Series, with a 32.768kHz sub-oscillator for clocks, counts up the system clock and a variety of power modes can reduce power consumption.

The HD4074829 is a ZTAT ™ microcomputer which incorporates a PROM. System development period has been dramatically reduced so that the process from debugging to mass production is smooth. (The PROM programming specifications are the same as those for Type 27256.)

ZTAT™: Zero Turn Around Time ZTAT is a trademark of Hitachi Ltd.

Features

- 1,876-digit × 4-bit RAM
- 44 I/O pins, including 10 high-current pins (15 mA, max.) and 20 pins multiplexed with LCD segment pins
- Four timer/counters
- 8-bit input capture circuit
- Three timer outputs (including two PWM out-puts)
- Two event counter inputs (including one double-edge function)
- Clock-synchronous 8-bit serial interface
- A/D converter (4 channels × 8 bits)
- LCD controller/driver (52 segments × 4 commons)
- Built-in oscillators
  - — Main clock: 4.2-MHz ceramic (an external clock is also possible)
  - — Subclock: 32.768-kHz crystal
- Eleven interrupt sources
  - — Five by external sources, including three double-edge functions

Hitachi semiconductor

— Six by internal sources

- Subroutine stack up to 16 levels, including interrupts
- Four low-power dissipation modes
  — Subactive mode
  — Standby mode
  — Watch mode
  — Stop mode
- One external input for transition from stop mode to active mode
- Instruction cycle time (min.): 0.95 µs (f_{OSC} = 4.2 MHz)
- Operation voltage
  V_{CC} = 2.7 V to 6.0 V (HD404829R)
  V_{CC} = 2.7 V to 5.5 V (HD4074829)
- Two operating modes
  — MCU mode
  — MCU/PROM mode (HD4074829 only)

Ordering Information

Type	Product Name	Model Name	ROM (Words)	Package
Mask ROM	HD404828R	HD404828RH	8,192	100-pin plastic QFP (FP-100B)
		HD404828RFS		100-pin plastic QFP (FP-100A)
		HD404828RTF		100-pin plastic TQFP (TFP-100B)
	HD4048212R	HD4048212RH	12,288	100-pin plastic QFP (FP-100B)
		HD4048212RFS		100-pin plastic QFP (FP-100A)
		HD4048212RTF		100-pin plastic TQFP (TFP-100B)
	HD404829R	HD404829RH	16,384	100-pin plastic QFP (FP-100B)
		HD404829RFS		100-pin plastic QFP (FP-100A)
		HD404829RTF		100-pin plastic TQFP (TFP-100B)
ZTAT™	HD4074829	HD4074829H	16,384	100-pin plastic QFP (FP-100B)
		HD4074829FS		100-pin plastic QFP (FP-100A)
		HD4074829TF		100-pin plastic TQFP (TFP-100B)

Caution about operation!

It has been confirmed that the HD404829R Series, same as the ZTAT™ version HD4074829 and the conventional HD404829 Series, satisfies the electrical properties given on the data sheets, etc. However, effective values of the electrical properties, the operating margin, and the noise margin may differ with the manufacturing processes, on-chip ROM, and layout patterns. Therefore, conduct an evaluation test of your system using the ZTAT™ version and the mask ROM version. Also conduct a similar evaluation test for checkup before replacing your conventional product with the HD404829R Series.

List of Functions

Product name		HD404828R	HD4048212R	HD404829R	HD4074829
ROM (Words)		8,192	12,288	16,384	16,384PROM
RAM (Digits)		1,876			
I/O		44 (max)			
	Large-current I/O pins	10 (Sink 15 mA max)			
	LCD segment multiplexed pins	20			
Timer / Counter		4			
	Input capture	8 bit × 1			
	Timer output	3 (PWM output possible for 2)			
	Event input	2 (edge selection possible for 1)			
Serial interface		1 (8-bit syncronous)			
A/D converter		8 bit × 4 channels			
LCD controller / driver circuit		Max. 52 seg × 4 com			
Interrupts	External	5 (edge selection possible for 3)			
	Internal	6			
Low-Power Dissipation Mode		4			
	Stop mode	O			
	Watch mode	O			
	Standby mode	O			
	Subactive mode	O			
Main Oscillator	Ceramic oscillation	O (0.4–4.2MHz)			
	Crystal oscillation	O (0.4–4.2MHz)			—
Sub oscillator	Crystal oscillation	O (32.768 kHz)			
Minimum instruction execution time		0.95 µs (f_{OSC} = 4.2 MHz)			
Operating voltage (V)		2.7 to 6.0			2.7 to 5.5
Package		100-pin plastic QFP (FP-100B) 100-pin plastic QFP (FP-100A) 100-pin plastic TQFP (TFP-100B)			
Guaranteed operation temperature (˚C)		–20 to +75			

Pin Arrangement

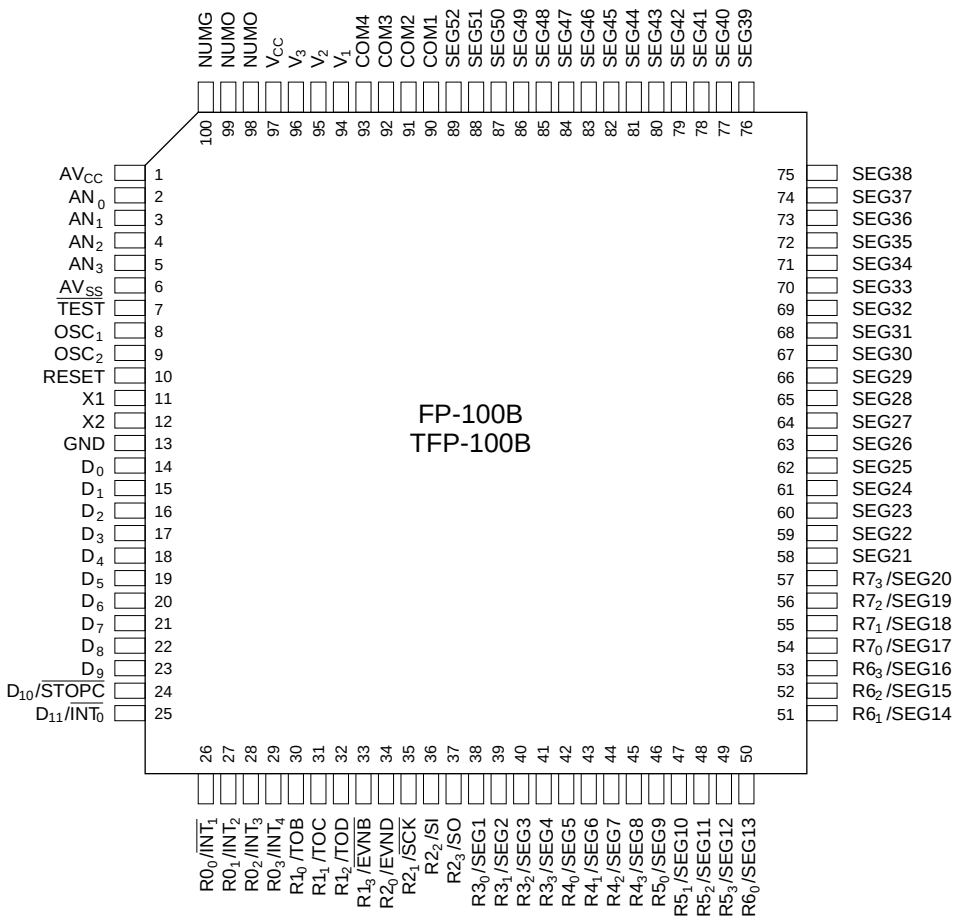

Pin Arrangement

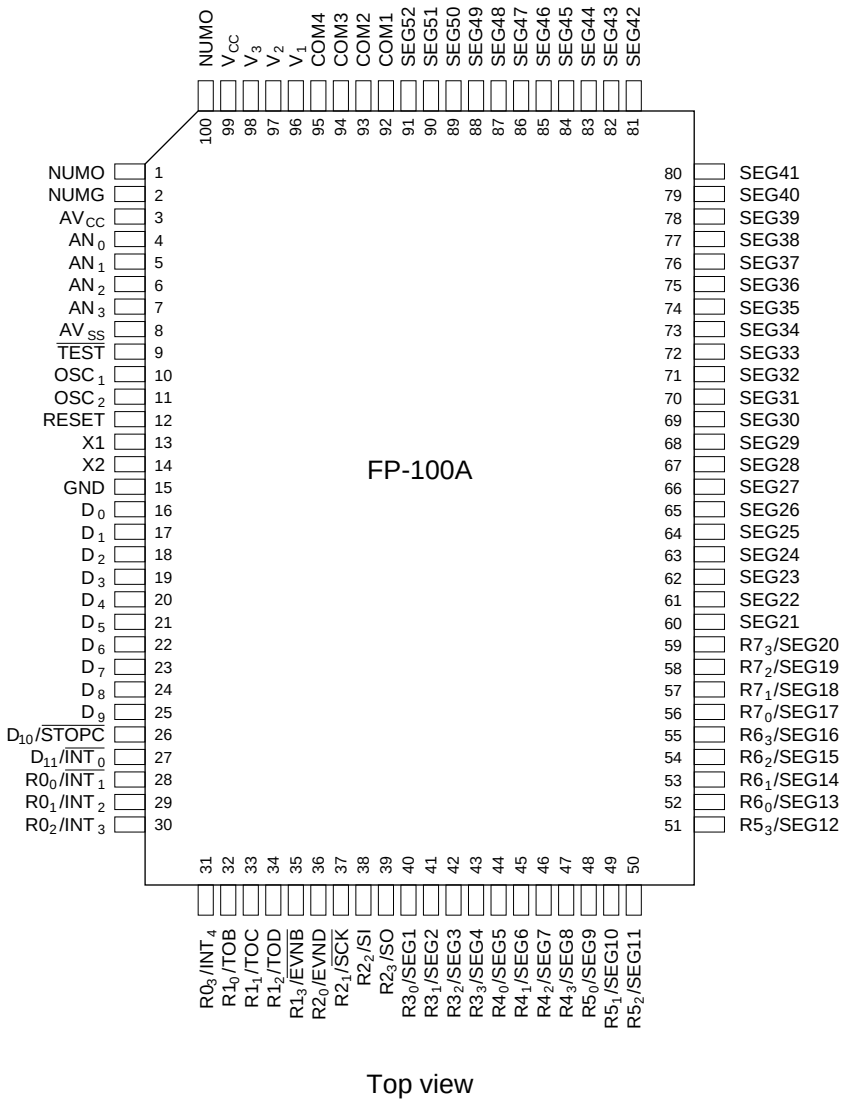

Top view

Pin Description

Item	Symbol	Pin Number FP-100B TFP-100B	Pin Number FP-100A	I/O	Function
Power supply	V_{CC}	97	99		Applies power voltage
	GND	13	15		Connected to ground
Test	$\overline{TEST}$	7	9	I	Used for factory testing only: Connect this pin to V_{CC}
Reset	RESET	10	12	I	Resets the MCU
Oscillator	OSC_1	8	10	I	Input/output pins for the internal oscillator circuit:
	OSC_2	9	11	O	Connect them to a ceramic oscillator ,crystal oscillator or connect OSC_1 to an external oscillator curcuit
	X1	11	13	I	Used for a 32.768-kHz crystal for clock purposes.
	X2	12	14	O	If not to be used, fix the X1 pin to V_{CC} and leave the X2 pin open.
Port	D_0–D_9	14–23	16–25	I/O	Input/output pins addressed by individual bits; pins D_0–D_9 are high-current pins that can each supply up to 15 mA
	D_{10}, D_{11}	24, 25	26, 27	I	Input pins addressable by individual bits
	$R0_0$–$R7_3$	26–57	28–59	I/O	Input/output pins addressable in 4-bit units
Interrupt	$\overline{INT}_0$, $\overline{INT}_1$, INT_2–INT_4	25–29	27–31	I	Input pins for external interrupts
Stop clear	$\overline{STOPC}$	24	26	I	Input pin for transition from stop mode to active mode
Serial interface	$\overline{SCK}$	35	37	I/O	Serial interface clock input/output pin
	SI	36	38	I	Serial interface receive data input pin
	SO	37	39	O	Serial interface transmit data output pin
Timer	TOB, TOC, TOD	30–32	32–34	O	Timer output pins
	$\overline{EVNB}$, EVND	33, 34	35, 36	I	Event count input pins
LCD	V_1, V_2, V_3	94–96	96–98		Power pins for LCD controller/driver; may be left open during operation since they are connected by internal voltage division resistors. Voltage conditions are: $V_{CC} \geq V_1 \geq V_2 \geq V_3 \geq$ GND
	COM1–COM4	90–93	92–95	O	Common signal pins for LCD
	SEG1–SEG52	38–89	40–91	O	Segment signal pins for LCD

Item	Symbol	Pin Number FP-100B TFP-100B	Pin Number FP-100A	I/O	Function
A/D converter	AV_{CC}	1	3		Power pin for A/D converter: Connect it to the same potential as V_{CC}, as physically close to the V_{CC} pin as possible
	AV_{SS}	6	8		Ground for AV_{CC}: Connect it to the same potential as GND, as physically close to the GND pin as possible
	AN_0–AN_3	2–5	4–7	I	Analog input pins for A/D converter
NUMG	NUMG	100	2		These are not pins for user applications. Connect NUMG to the same potential as GND. Leave NUMO open.
NUMO	NUMO	98,99	100,1		

Block Diagram

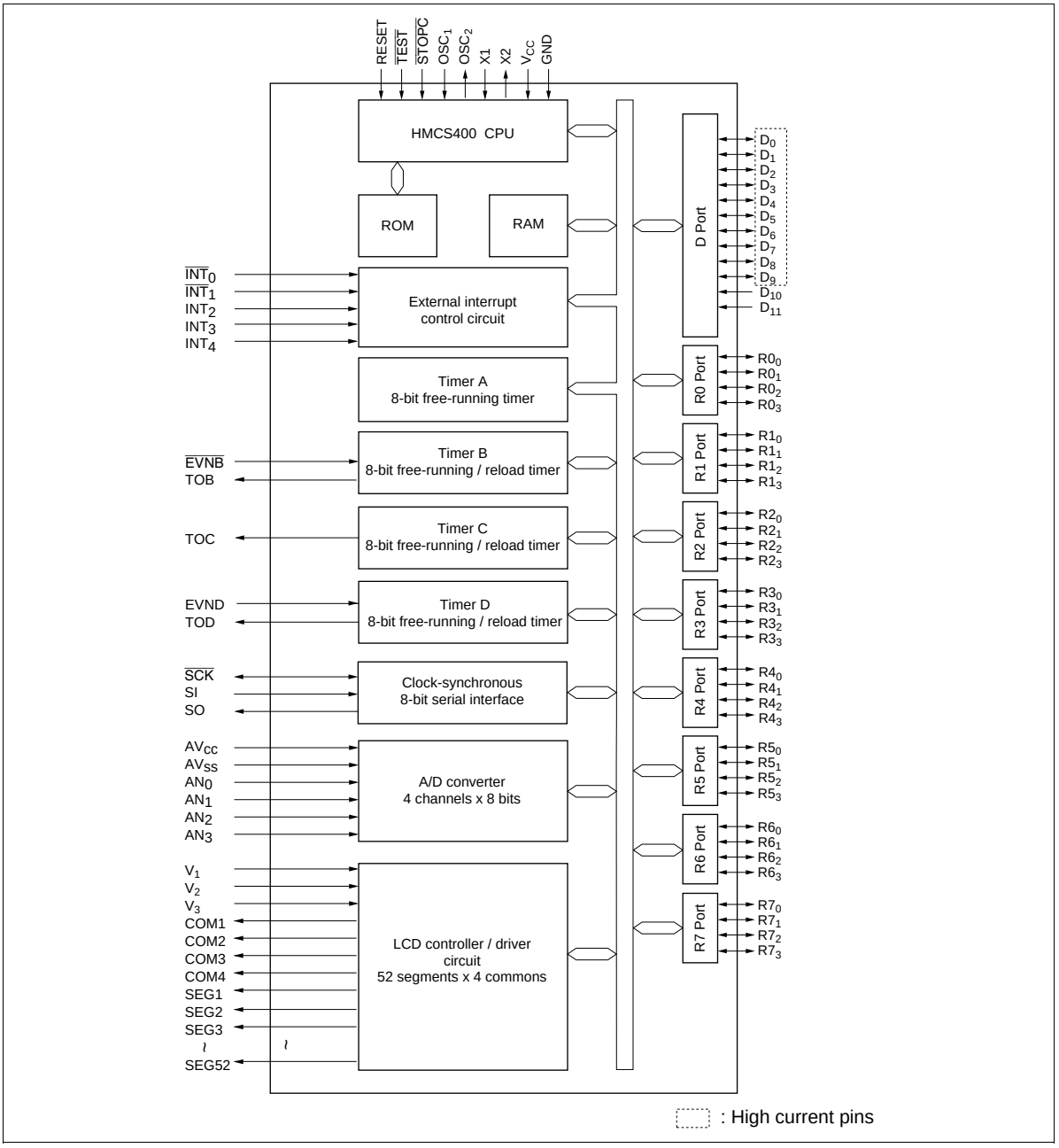

Memory Map

ROM Memory Map

The ROM memory map is shown in figure 1 and described below.

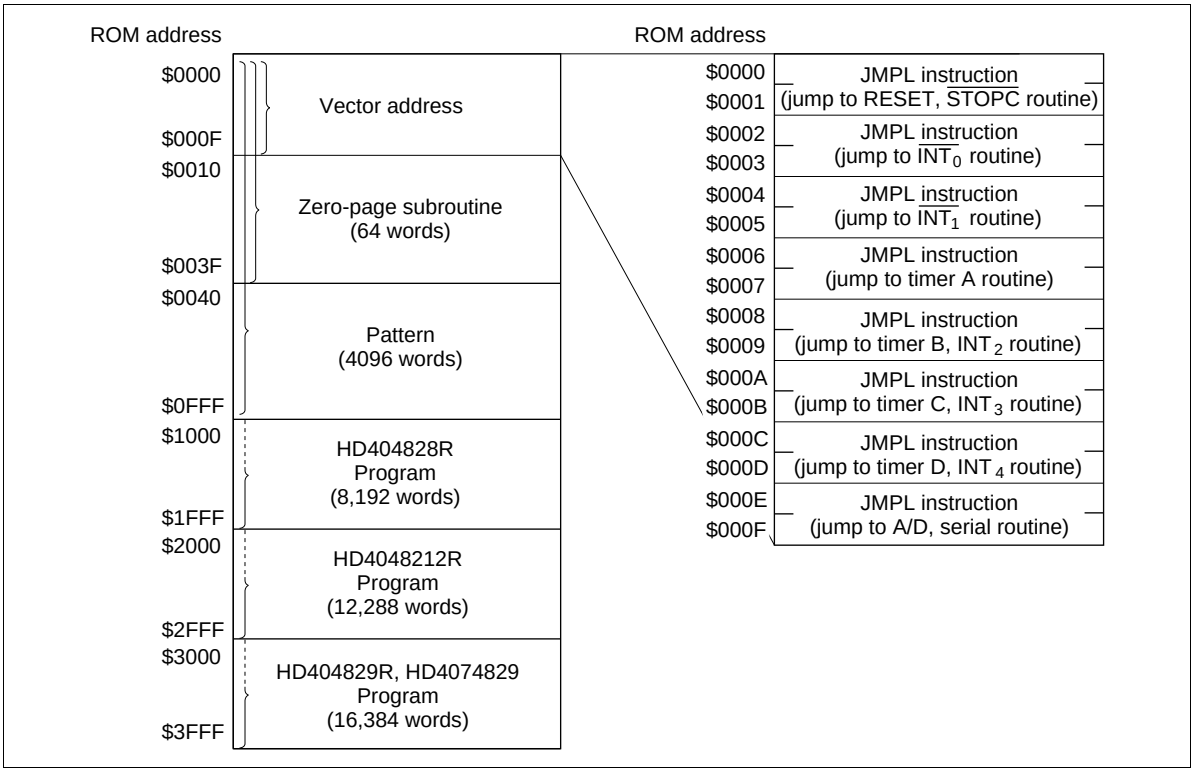

Figure 1 ROM Memory Map

Vector Address Area ($0000–$000F): Reserved for JMPL instructions that branch to the start addresses of the reset and interrupt routines. After MCU reset or an interrupt, program execution continues from the vector address.

Zero-Page Subroutine Area ($0000–$003F): Reserved for subroutines. The program branches to a subroutine in this area in response to the CAL instruction.

Pattern Area ($0000–$0FFF): Contains ROM data that can be referenced with the P instruction.

Program Area ($0000–$1FFF: HD404828R; $0000–$2FFF: HD4048212R; $0000–$3FFF; HD404829R, HD4074829): Used for program coding.

RAM Memory Map

The MCU contains a 1,876-digit × 4-bit RAM area consisting of a memory register area, an LCD data area, a data area, and a stack area. In addition, an interrupt control bits area, special register area, and register flag area are mapped onto the same RAM memory space as a RAM-mapped register area outside the above areas. The RAM memory map is shown in figure 2 and described below.

RAM-Mapped Register Area ($000–$03F):

- Interrupt Control Bits Area ($000–$003)

  This area is used for interrupt control bits (figure 3). These bits can be accessed only by RAM bit manipulation instructions (SEM/SEMD, REM/REMD, and TM/TMD). However, note that not all the instructions can be used for each bit. Limitations on using the instructions are shown in figure 4.

- Special Function Register Area ($004–$01F, $024–$03F)

  This area is used as mode registers and data registers for external interrupts, serial interface, timer/counters, LCD, A/D converter, and as data control registers for I/O ports. The structure is shown in figures 2 and 5. These registers can be classified into three types: write-only (W), read-only (R), and read/write (R/W). The SEM, SEMD, REM, and REMD instructions can be used for the LCD control register (LCR: $01B), but RAM bit manipulation instructions cannot be used for other registers.

- Register Flag Area ($020–$023)

  This area is used for the DTON, WDON, and other register flags and interrupt control bits (figure 3). These bits can be accessed only by RAM bit manipulation instructions (SEM/SEMD, REM/REMD, and TM/TMD). However, note that not all the instructions can be used for each bit. Limitations on using the instructions are shown in figure 4.

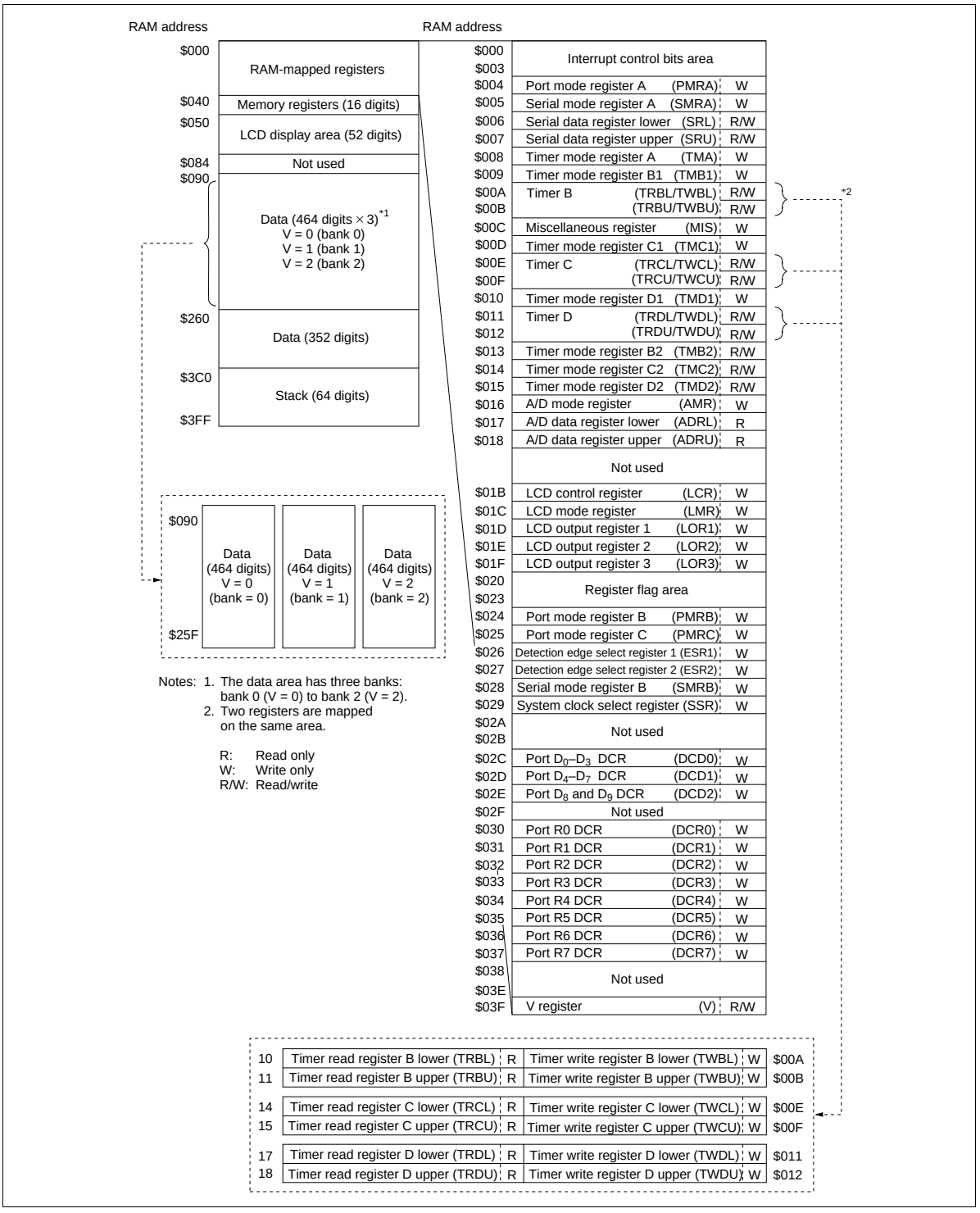

Figure 2 RAM Memory Map

RAM address	Bit 3	Bit 2	Bit 1	Bit 0
$000	IM0 (IM of $\overline{INT_0}$)	IF0 (IF of $\overline{INT_0}$)	RSP (Reset SP bit)	IE (Interrupt enable flag)
$001	IMTA (IM of timer A)	IFTA (IF of timer A)	IM1 (IM of $\overline{INT_1}$)	IF1 (IF of $\overline{INT_1}$)
$002	IMTC (IM of timer C)	IFTC (IF of timer C)	IMTB (IM of timer B)	IFTB (IF of timer B)
$003	IMAD (IM of A/D)	IFAD (IF of A/D)	IMTD (IM of timer D)	IFTD (IF of timer D)

Interrupt control bits area

	Bit 3	Bit 2	Bit 1	Bit 0
$020	DTON (Direct transfer on flag)	ADSF (A/D start flag)	WDON (Watchdog on flag)	LSON (Low speed on flag)
$021	RAME (RAM enable flag)	Not used	ICEF (Input capture error flag)	ICSF (Input capture status flag)
$022	IM3 (IM of INT_3)	IF3 (IF of INT_3)	IM2 (IM of INT_2)	IF2 (IF of INT_2)
$023	IMS (IM of serial interface)	IFS (IF of serial interface)	IM4 (IM of INT_4)	IF4 (IF of INT_4)

Register flag area

IF: Interrupt request flag
IM: Interrupt mask
IE: Interrupt enable flag
SP: Stack pointer

Figure 3 Configuration of Interrupt Control Bits and Register Flag Areas

	SEM/SEMD	REM/REMD	TM/TMD
IE	Allowed	Allowed	Allowed
IM			
LSON			
IF	Not executed	Allowed	Allowed
ICSF			
ICEF			
RAME			
RSP	Not executed	Allowed	Inhibited
WDON	Allowed	Not executed	Inhibited
ADSF	Allowed	Inhibited	Allowed
DTON	Not executed in active mode	Allowed	Allowed
	Used in subactive mode		
Not used	Not executed	Not executed	Inhibited

Note: WDON is reset by MCU reset or by $\overline{STOPC}$ enable for stop mode cancellation.
The REM or REMD instuction must not be executed for ADSF during A/D conversion.
DTON is always reset in active mode.
If the TM or TMD instruction is executed for the inhibited bits or non-existing bits, the value in ST becomes invalid.

Figure 4 Usage Limitations of RAM Bit Manipulation Instructions

	Bit 3	Bit 2	Bit 1	Bit 0
$000	Interrupt control bits area			
$003				
PMRA $004	Not used	Not used	$R2_2$/SI	$R2_3$/SO
SMRA $005	$R2_1/\overline{SCK}$	Serial transmit clock speed selection		
SRL $006	Serial data register (lower digit)			
SRU $007	Serial data register (upper digit)			
TMA $008	*1	Clock source setting (timer A)		
TMB1 $009	*2	Clock source setting (timer B)		
TRBL/TWBL $00A	Timer B register (lower digit)			
TRBU/TWBU $00B	Timer B register (upper digit)			
MIS $00C	*3	$R2_3$/SO PMOS control	Interrupt frame period selection	
TMC1 $00D	*2	Clock source setting (timer C)		
TRCL/TWCL $00E	Timer C register (lower digit)			
TRCU/TWCU $00F	Timer C register (upper digit)			
TMD1 $010	*2	Clock source setting (timer D)		
TRDL/TWDL $011	Timer D register (lower digit)			
TRDU/TWDU $012	Timer D register (upper digit)			
TMB2 $013	Not used	Not used	Timer-B output mode selection	
TMC2 $014	Not used	Timer-C output mode setting		
TMD2 $015	*4	Timer-D output mode setting		
AMR $016	Analog channel selection		Not used	*5
ADRL $017	A/D data register (lower digit)			
ADRU $018	A/D data register (upper digit)			
	Not used			
LCR $01B	Not used	*6	*7	*8
LMR $01C	LCD input clock source selection		LCD duty cycle selection	
LOR1 $01D	$R3_3$/SEG4	$R3_2$/SEG3	$R3_1$/SEG2	$R3_0$/SEG1
LOR2 $01E	$R4_3$/SEG8	$R4_2$/SEG7	$R4_1$/SEG6	$R4_0$/SEG5
LOR3 $01F	Not used	R7/SEG17–20	R6/SEG13–16	R5/SEG9–12
$020	Register flag area			
$023				
PMRB $024	$R0_3/INT_4$	$R0_2/INT_3$	$R0_1/INT_2$	$R0_0/\overline{INT_1}$
PMRC $025	$D_{11}/\overline{INT_0}$	$D_{10}/\overline{STOPC}$	$R2_0$/EVND	$R1_3/\overline{EVNB}$
ESR1 $026	INT_3 detection edge selection		INT_2 detection edge selection	
ESR2 $027	EVND detection edge selection		INT_4 detection edge selection	
SMRB $028	Not used	Not used	*9	*10
SSR $029	*11	*12	*13	Not used
	Not used			
DCD0 $02C	Port D_3 DCR	Port D_2 DCR	Port D_1 DCR	Port D_0 DCR
DCD1 $02D	Port D_7 DCR	Port D_6 DCR	Port D_5 DCR	Port D_4 DCR
DCD2 $02E	Not used	Not used	Port D_9 DCR	Port D_8 DCR
	Not used			
DCR0 $030	Port $R0_3$ DCR	Port $R0_2$ DCR	Port $R0_1$ DCR	Port $R0_0$ DCR
DCR1 $031	Port $R1_3$ DCR	Port $R1_2$ DCR	Port $R1_1$ DCR	Port $R1_0$ DCR
DCR2 $032	Port $R2_3$ DCR	Port $R2_2$ DCR	Port $R2_1$ DCR	Port $R2_0$ DCR
DCR3 $033	Port $R3_3$ DCR	Port $R3_2$ DCR	Port $R3_1$ DCR	Port $R3_0$ DCR
DCR4 $034	Port $R4_3$ DCR	Port $R4_2$ DCR	Port $R4_1$ DCR	Port $R4_0$ DCR
DCR5 $035	Port $R5_3$ DCR	Port $R5_2$ DCR	Port $R5_1$ DCR	Port $R5_0$ DCR
DCR6 $036	Port $R6_3$ DCR	Port $R6_2$ DCR	Port $R6_1$ DCR	Port $R6_0$ DCR
DCR7 $037	Port $R7_3$ DCR	Port $R7_2$ DCR	Port $R7_1$ DCR	Port $R7_0$ DCR
	Not used			
V $03F	Not used	Not used	Bank 0 to bank 2 selection	

Notes:
1. Timer-A/time-base
2. Auto-reload on/off
3. Pull-up MOS control
4. Input capture selection
5. A/D conversion time
6. Display on/off in watch mode
7. LCD power switch
8. LCD display on/off
9. SO idle H/L setting
10. Transmit clock source selection
11. 32-kHz oscillation stop setting
12. 32-kHz oscillation division ratio
13. System clock selection

Figure 5 Special Function Register Area

Memory Register (MR) Area ($040–$04F): Consisting of 16 addresses, this area (MR0–MR15) can be accessed by register-register instructions (LAMR and XMRA). The structure is shown in figure 6.

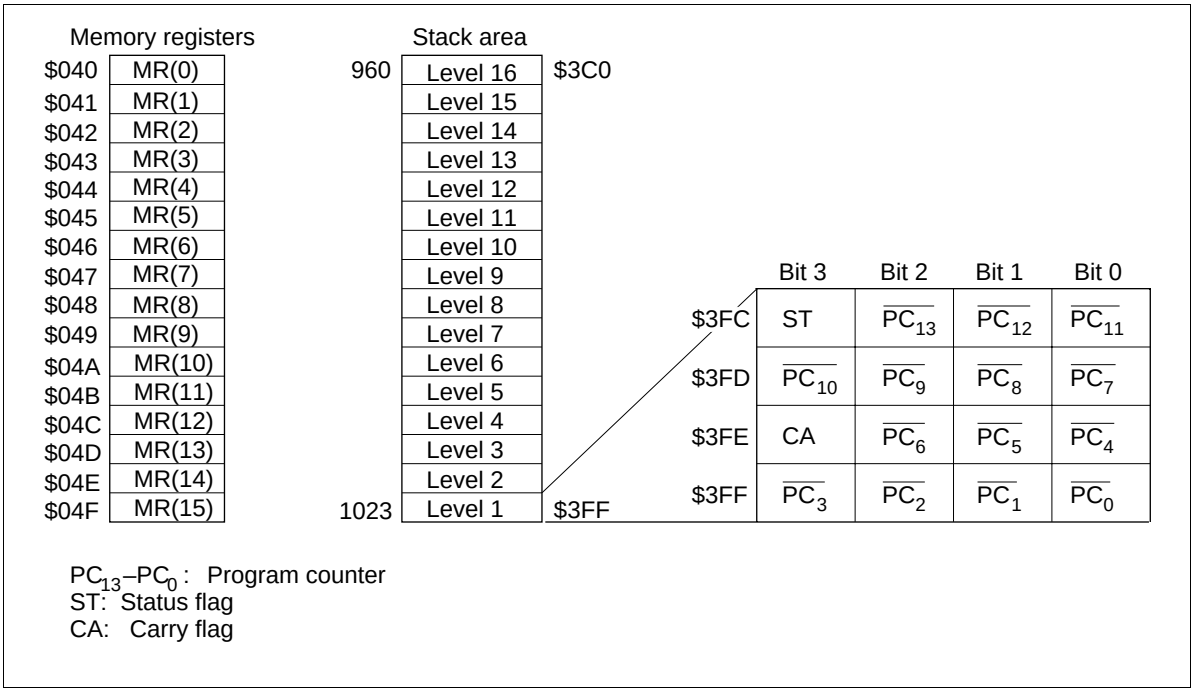

Figure 6 Configuration of Memory Registers and Stack Area, and Stack Position

LCD Data Area ($050–$083): Used for storing 52-digit LCD data which is automatically output to LCD segments as display data. Data 1 lights the corresponding LCD segment; data 0 extinguishes it. Refer to the LCD description for details.

Data Area ($090–$3BF): 464 digits from $090 to $25F have three banks, which can be selected by setting the bank register (V: $03F). Before accessing this area, set the bank register to the required value (figure 7). The area from $260 to $3BF is accessed without setting the bank register.

Bank register (V: $03F)

Bit	3	2	1	0
Initial value	—	—	0	0
Read/Write	—	—	R/W	R/W
Bit name	Not used	Not used	V1	V0

V1	V0	Bank area selection
0	0	Bank 0 is selected
	1	Bank 1 is selected
1	0	Bank 2 is selected
	1	Not used

Note: After reset, the value in the bank register is 0, and therefore bank 0 is selected. If V1 = 1 and V0 = 1, no bank is selected, and the operation is not guaranteed.

Figure 7 Bank Register (V)

Stack Area ($3C0–$3FF): Used for saving the contents of the program counter (PC), status flag (ST), and carry flag (CA) at subroutine call (CAL or CALL instruction) and for interrupts. This area can be used as a 16-level nesting subroutine stack in which one level requires four digits. The data to be saved and the save conditions are shown in figure 6.

The program counter is restored by either the RTN or RTNI instruction, but the status and carry flags can only be restored by the RTNI instruction. Any unused space in this area is used for data storage.

Functional Description

Registers and Flags

The MCU has nine registers and two flags for CPU operations. They are shown in figure 8 and described below.

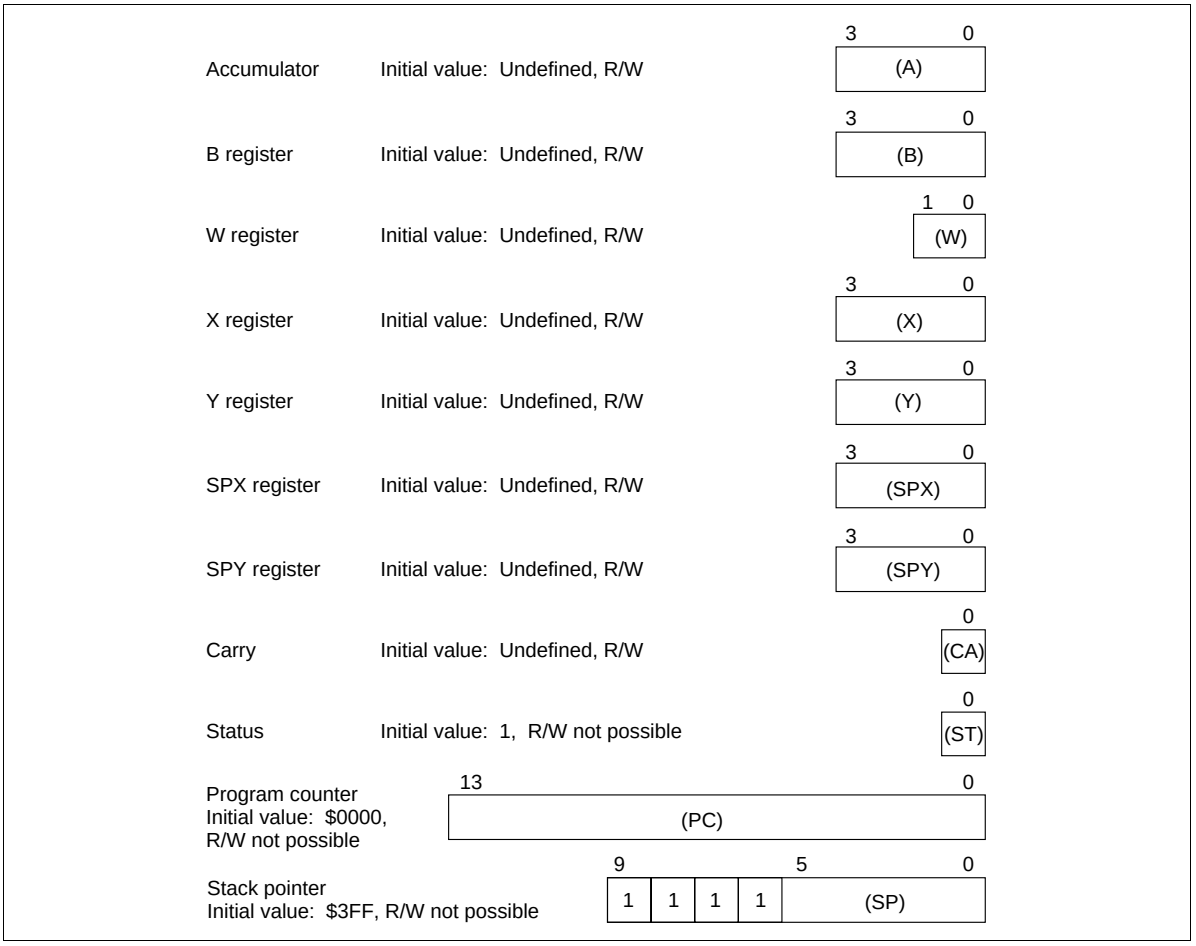

Figure 8 Registers and Flags

Accumulator (A) and B Register (B)

A and B are 4-bit registers, and are used to hold the results of ALU(arithmetic and logical unit) operations and to transfer data between memory, I/O ports, and other registers.

W Register (W), X Register (X), Y Register (Y)

W is a 2-bit register and X and Y are 4-bit registers. These registers are used in RAM register indirect addressing. The Y register is also used in D port addressing.

SPX Register (SPX) and SPY Register (SPY)

The SPX and SPY registers are 4-bit registers used to supplement the X and Y registers.

Carry Flag (CA)

CA is a 1-bit flag that stores ALU overflow generated by an arithmetic operation. CA is set to 1 when an overflow is generated, and is cleared to 0 after operations in which no overflow occurred. CA is also affected by the carry set/carry clear instructions (SEC and REC), and by the rotate with carry instructions (ROTL and ROTR.)

During interrupt handling, CA is saved on the stack, and is restored from the stack by the RTNI instruction.

Status Flag (ST)

ST is a 1-bit flag that stores the results of arithmetic instructions, compare instructions, and bit test instructions, and is used as the branch condition for the BR, BRL, CAL, and CALL conditional branch instructions.

The contents of the ST flag are held until the next arithmetic, compare, bit test, or conditional branch instruction is executed. After the execution of a conditional branch instruction, the value of ST is set to 1 without regard to the condition.

During interrupt handling, ST is saved on the stack, and is restored from the stack by the RTNI instruction.

Program Counter (PC)

The PC is a 14-bit counter that indicates the ROM address of the next instruction the CPU will execute.

Stack Pointer (SP)

The SP is a 10-bit register that indicates the RAM address of the next stack frame in the stack area.

The SP is initialized to $3FF by a reset. The SP is decremented by 4 by a subroutine call or by interrupt handling, and is incremented by 4 when the saved data has been restored by a return instruction.

The upper 4 bits of the SP are fixed at 1111; the maximum number of stack levels is thus 16.

In addition to the reset method described above, the SP can also be initialized to $3FF by clearing the reset stack pointer (RSP) in the interrupt control bits area with a RAM bit manipulation instruction, i.e., REM or REMD.

Reset

The MCU is reset by inputting a high-level voltage to the RESET pin. At power-on or when stop mode is cancelled, RESET must be high for at least one t_{RC} to enable the oscillator to stabilize. During operation, RESET must be high for at least two instruction cycles.

Initial values after MCU reset are listed in table 1.

Table 1 Initial Values After MCU Reset

Item		Abbr.	Initial Value	Contents
Program counter		(PC)	$0000	Indicates program execution point from start address of ROM area
Status flag		(ST)	1	Enables conditional branching
Stack pointer		(SP)	$3FF	Stack level 0
Interrupt flags/mask	Interrupt enable flag	(IE)	0	Inhibits all interrupts
	Interrupt request flag	(IF)	0	Indicates there is no interrupt request
	Interrupt mask	(IM)	1	Prevents (masks) interrupt requests
I/O	Port data register	(PDR)	All bits 1	Enables output at level 1
	Data control register	(DCD0, DCD1)	All bits 0	Turns output buffer off (to high impedance)
		(DCD2)	- - 00	
		(DCR0, –DCR7)	All bits 0	
	Port mode register A	(PMRA)	- - 00	Refer to description of port mode register A
	Port mode register B	(PMRB)	0000	Refer to description of port mode register B
	Port mode register C bits 3, 1, 0	(PMRC3, PMRC1, PMRC0)	000	Refer to description of port mode register C
	Detection edge select register 1	(ESR1)	0000	Disables edge detection
	Detection edge select register 2	(ESR2)	0000	Disables edge detection
Timer/ counters, serial interface	Timer mode register A	(TMA)	0000	Refer to description of timer mode register A
	Timer mode register B1	(TMB1)	0000	Refer to description of timer mode register B1
	Timer mode register B2	(TMB2)	- - 00	Refer to description of timer mode register B2
	Timer mode register C1	(TMC1)	0000	Refer to description of timer mode register C1
	Timer mode register C2	(TMC2)	- 000	Refer to description of timer mode register C2
	Timer mode register D1	(TMD1)	0000	Refer to description of timer mode register D1
	Timer mode register D2	(TMD2)	0000	Refer to description of timer mode register D2
	Serial mode register A	(SMRA)	0000	Refer to description of serial mode register A
	Serial mode register B	(SMRB)	- - x0	Refer to description of serial mode register B
	Prescaler S	(PSS)	$000	—
	Prescaler W	(PSW)	$00	—
	Timer counter A	(TCA)	$00	—
	Timer counter B	(TCB)	$00	—
	Timer counter C	(TCC)	$00	—
	Timer counter D	(TCD)	$00	—

Table 1 Initial Values After MCU Reset (cont)

Item		Abbr.	Initial Value	Contents
Timer/ counters,	Timer write register B	(TWBU, TWBL)	$X0	—
serial interface	Timer write register C	(TWCU, TWCL)	$X0	—
	Timer write register D	(TWDU, TWDL)	$X0	—
	Octal counter	(OC)	000	—
A/D	A/D mode register	(AMR)	00 - 0	Refer to description of A/D mode register
	A/D data register	(ADRL, ADRU)	$80	Refer to description of A/D data register
LCD	LCD control register	(LCR)	- 000	Refer to description of LCD control register
	LCD mode register	(LMR)	0000	Refer to description of LCD duty-cycle/clock control register
	LCD output register 1	(LOR1)	0000	Sets R-port/LCD segment pins to R port mode
	LCD output register 2	(LOR2)	0000	
	LCD output register 3	(LOR3)	- 000	
Bit registers	Low speed on flag	(LSON)	0	Refer to description of operating modes
	Watchdog timer on flag	(WDON)	0	Refer to description of timer C
	A/D start flag	(ADSF)	0	Refer to description of A/D converter
	Direct transfer on flag	(DTON)	0	Refer to description of operating modes
	Input capture status flag	(ICSF)	0	Refer to description of timer D
	Input capture error flag	(ICEF)	0	Refer to description of timer D
Others	Miscellaneous register	(MIS)	0000	Refer to description of operating modes, I/O, and serial interface
	System clock select register bits 2,1	(SSR2, SSR1)	000	Refer to description of operating modes and oscillation circuits
	Bank register	(V)	- - 00	Refer to description of RAM memory map

Notes: 1. The statuses of other registers and flags after MCU reset are shown in the following table.
2. X indicates invalid value. – indicates that the bit does not exist.

Item	Abbr.	Status After Cancellation of Stop Mode by $\overline{\text{STOPC}}$ Input	Status After Cancellation of Stop Mode by RESET Input	Status After all Other Types of Reset
Carry flag	(CA)	Pre-stop-mode values are not guaranteed; values must be initialized by program		Pre-MCU-reset values are not guaranteed; values must be initialized by program
Accumulator	(A)			
B register	(B)			
W register	(W)			
X/SPX register	(X/SPX)			
Y/SPY register	(Y/SPY)			
Serial data register	(SRL, SRU)			
RAM		Pre-stop-mode values are retained		
RAM enable flag	(RAME)	1	0	0
Port mode register C bit 2	(PMRC2)	Pre-stop-mode values are retained	0	0
System clock select register bit 3	(SSR3)			

Interrupts

The MCU has 11 interrupt sources: five external signals ($\overline{\text{INT}}_0$, $\overline{\text{INT}}_1$, INT_2–INT_4), four timer/ counters (timers A, B, C, and D), serial interface, and A/D converter.

An interrupt request flag (IF), interrupt mask (IM), and vector address are provided for each interrupt source, and an interrupt enable flag (IE) controls the entire interrupt process.

Some vector addresses are shared by two different interrupts. They are timer B and INT_2, timer C and INT_3, timer D and INT_4, and A/D converter and serial interface interrupts. So the type of request that has occurred must be checked at the beginning of interrupt processing.

Interrupt Control Bits and Interrupt Processing: Locations $000 to $003 and $022 to $023 in RAM are reserved for the interrupt control bits which can be accessed by RAM bit manipulation instructions.

The interrupt request flag (IF) cannot be set by software. MCU reset initializes the interrupt enable flag (IE) and the IF to 0 and the interrupt mask (IM) to 1.

A block diagram of the interrupt control circuit is shown in figure 9, interrupt priorities and vector addresses are listed in table 2, and interrupt processing conditions for the 11 interrupt sources are listed in table 3.

An interrupt request occurs when the IF is set to 1 and the IM is set to 0. If the IE is 1 at that point, the interrupt is processed. A priority programmable logic array (PLA) generates the vector address assigned to that interrupt source.

The interrupt processing sequence is shown in figure 10 and an interrupt processing flowchart is shown in figure 11. After an interrupt is acknowledged, the previous instruction is completed in the first cycle. The IE is reset in the second cycle, the carry, status, and program counter values are pushed onto the stack

during the second and third cycles, and the program jumps to the vector address to execute the instruction in the third cycle.

Program the JMPL instruction at each vector address, to branch the program to the start address of the interrupt program, and reset the IF by a software instruction within the interrupt program.

Table 2 Vector Addresses and Interrupt Priorities

Reset/Interrupt	Priority	Vector Address
RESET, $\overline{\text{STOPC}}$*	—	$0000
$\overline{\text{INT}}_0$	1	$0002
$\overline{\text{INT}}_1$	2	$0004
Timer A	3	$0006
Timer B, INT_2	4	$0008
Timer C, INT_3	5	$000A
Timer D, INT_4	6	$000C
A/D, Serial	7	$000E

Note: * The $\overline{\text{STOPC}}$ interrupt request is valid only in stop mode.

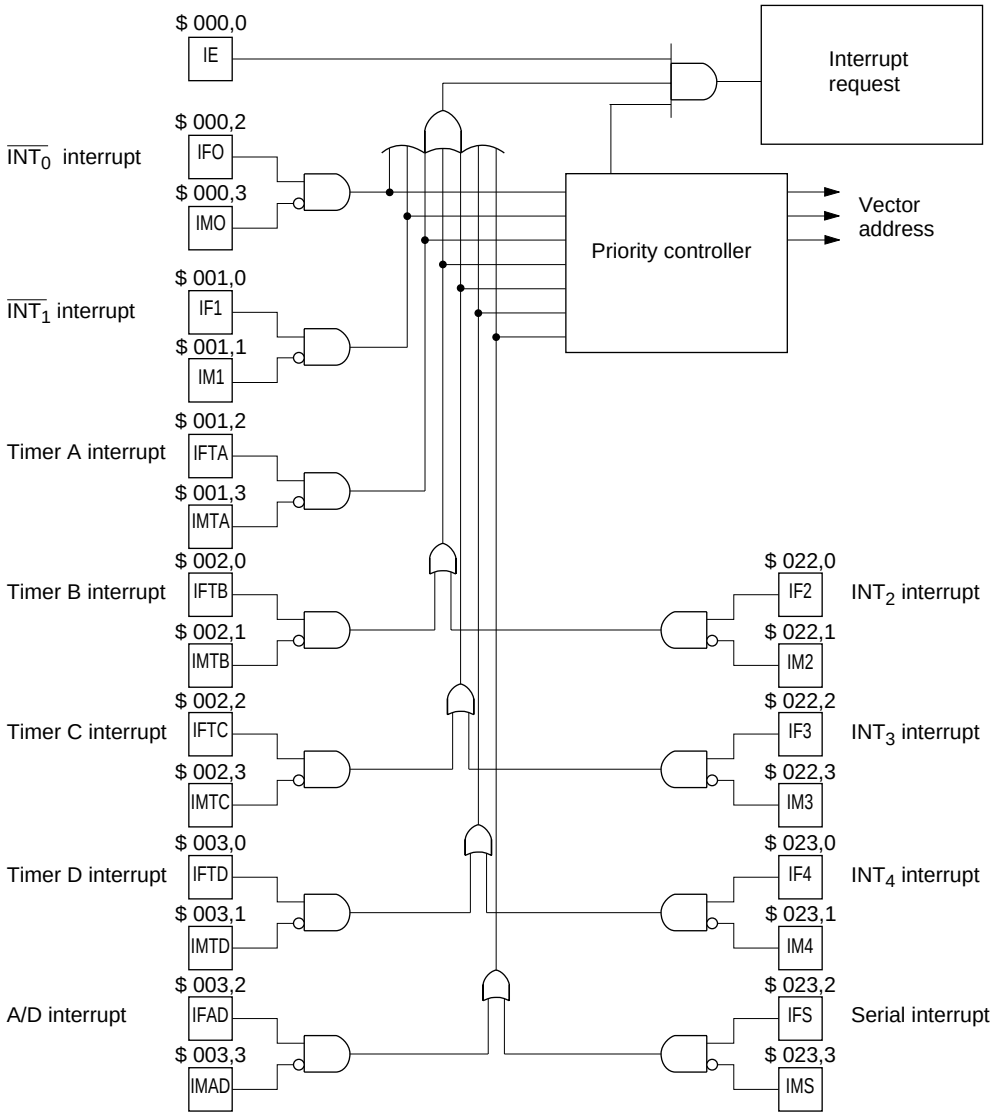

Note: $m,n is RAM address $m, bit number n.

Figure 9 Interrupt Control Circuit

Table 3 Interrupt Processing and Activation Conditions

Interrupt Cuntrol Bit	Interrupt Source						
	$\overline{INT_0}$	$\overline{INT_1}$	Timer A	Timer B or INT_2	Timer C or INT_3	Timer D or INT_4	A/D or Serial
IE	1	1	1	1	1	1	1
IF0 · $\overline{IM0}$	1	0	0	0	0	0	0
IF1 · $\overline{IM1}$	*	1	0	0	0	0	0
IFTA · $\overline{IMTA}$	*	*	1	0	0	0	0
IFTB · $\overline{IMTB}$ + IF2 · $\overline{IM2}$	*	*	*	1	0	0	0
IFTC · $\overline{IMTC}$ + IF3 · $\overline{IM3}$	*	*	*	*	1	0	0
IFTD · $\overline{IMTD}$ + IF4 · $\overline{IM4}$	*	*	*	*	*	1	0
IFAD · $\overline{IMAD}$ + IFS · $\overline{IMS}$	*	*	*	*	*	*	1

Note: Bits marked * can be either 0 or 1. Their values have no effect on operation.

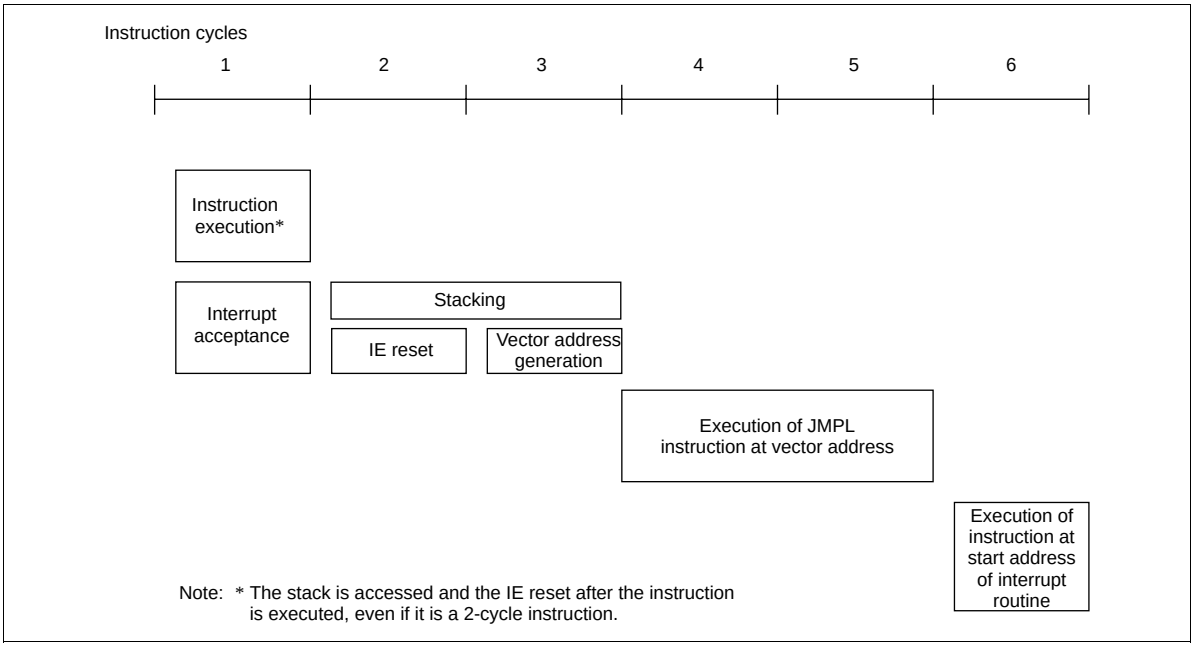

Figure 10 Interrupt Processing Sequence

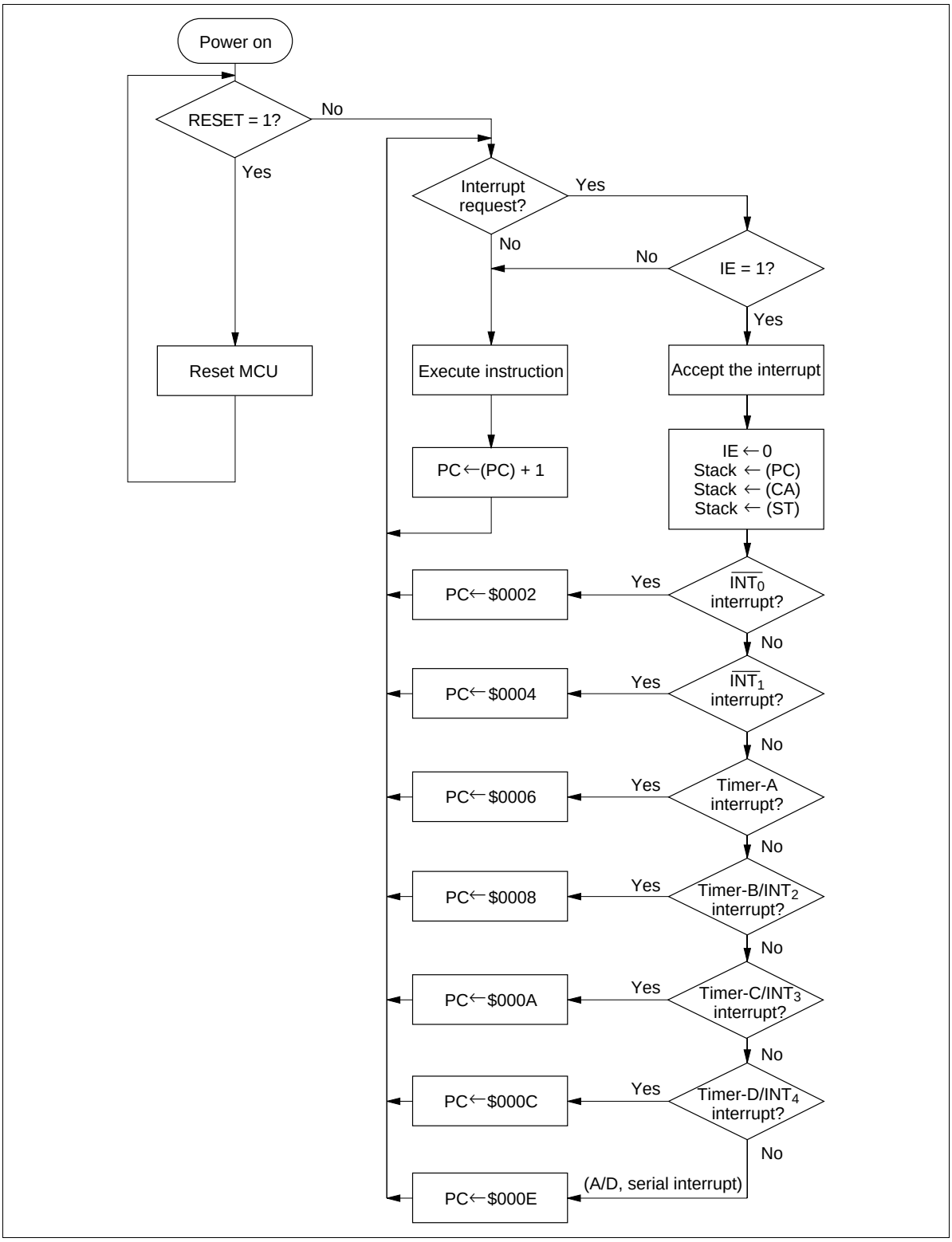

Figure 11 Interrupt Processing Flowchart

Interrupt Enable Flag (IE: $000, Bit 0): Controls the entire interrupt process. It is reset by the interrupt processing and set by the RTNI instruction, as listed in table 4.

Table 4 Interrupt Enable Flag (IE: $000, Bit 0)

IE	Interrupt Enabled/Disabled
0	Disabled
1	Enabled

External Interrupts ($\overline{INT_0}$, $\overline{INT_1}$, INT_2–INT_4): Five external interrupt signals.

External Interrupt Request Flags (IF0–IF4: $000, $001, $022, $023): IF0 and IF1 are set at the falling edge of signals input to $\overline{INT_0}$ and $\overline{INT_1}$, and IF2–IF4 are set at the rising or falling edge of signals input to INT_2–INT_4, as listed in table 5. The INT_2–INT_4 interrupt edges are selected by the detection edge select registers (ESR1, ESR2: $026, $027) as shown in figures 12 and 13.

Table 5 External Interrupt Request Flags (IF0–IF4: $000, $001, $022, $023)

IF0–IF4	Interrupt Request
0	No
1	Yes

Detection edge selection register 1 (ESR1: $026)

Bit	3	2	1	0
Initial value	0	0	0	0
Read/Write	W	W	W	W
Bit name	ESR13	ESR12	ESR11	ESR10

ESR13	ESR12	INT_3 detection edge
0	0	No detection
	1	Falling-edge detection
1	0	Rising-edge detection
	1	Double-edge detection*

ESR11	ESR10	INT_2 detection edge
0	0	No detection
	1	Falling-edge detection
1	0	Rising-edge detection
	1	Double-edge detection *

Note: * Both falling and rising edges are detected.

Figure 12 Detection Edge Selection Register 1 (ESR1)

Detection edge selection register 2 (ESR2: $027)

Bit	3	2	1	0
Initial value	0	0	0	0
Read/Write	W	W	W	W
Bit name	ESR23	ESR22	ESR21	ESR20

ESR23	ESR22	EVND detection edge
0	0	No detection
	1	Falling-edge detection
1	0	Rising-edge detection
	1	Double-edge detection*

ESR21	ESR20	INT_4 detection edge
0	0	No detection
	1	Falling-edge detection
1	0	Rising-edge detection
	1	Double-edge detection*

Note: * Both falling and rising edges are detected.

Figure 13 Detection Edge Selection Register 2 (ESR2)

External Interrupt Masks (IM0–IM4: $000, $001, $022, $023): Prevent (mask) interrupt requests caused by the corresponding external interrupt request flags, as listed in table 6.

Table 6 External Interrupt Masks (IM0–IM4: $000, $001, $022, $023)

IM0–IM4	Interrupt Request
0	Enabled
1	Disabled (masked)

Timer A Interrupt Request Flag (IFTA: $001, Bit 2): Set by overflow output from timer A, as listed in table 7.

Table 7 Timer A Interrupt Request Flag (IFTA: $001, Bit 2)

IFTA–IFTD	Interrupt Request
0	No
1	Yes

Timer A Interrupt Mask (IMTA: $001, Bit 3): Prevents (masks) an interrupt request caused by the timer A interrupt request flag, as listed in table 8.

Table 8 Timer A Interrupt Mask (IMTA: $001, Bit 3)

IMTA–IMTD	Interrupt Request
0	Enabled
1	Disabled (masked)

Timer B Interrupt Request Flag (IFTB: $002, Bit 0): Set by overflow output from timer B, as listed in table 7.

Timer B Interrupt Mask (IMTB: $002, Bit 1): Prevents (masks) an interrupt request caused by the timer B interrupt request flag, as listed in table 8.

Timer C Interrupt Request Flag (IFTC: $002, Bit 2): Set by overflow output from timer C, as listed in table 7.

Timer C Interrupt Mask (IMTC: $002, Bit 3): Prevents (masks) an interrupt request caused by the timer C interrupt request flag, as listed in table 8.

Timer D Interrupt Request Flag (IFTD: $003, Bit 0): Set by overflow output from timer D, or by the rising or falling of signals input to EVND when the input capture function is used, as listed in table 7.

Timer D Interrupt Mask (IMTD: $003, Bit 1): Prevents (masks) an interrupt request caused by the timer D interrupt request flag, as listed in table 8.

Serial Interrupt Request Flag (IFS: $023, Bit 2): Set when data transfer is completed or when data transfer is suspended, as listed in table 9.

Table 9 Serial Interrupt Request Flag (IFS: $023, Bit 2)

IFS	Interrupt Request
0	No
1	Yes

Serial Interrupt Mask (IMS: $023, Bit 3): Prevents (masks) an interrupt request caused by the serial interrupt request flag, as listed in table 10.

Table 10 Serial Interrupt Mask (IMS: $023, Bit 3)

IMS	Interrupt Request
0	Enabled
1	Disabled (masked)

A/D Interrupt Request Flag (IFAD: $003, Bit 2): Set at the completion of A/D conversion, as listed in table 11.

Table 11 A/D Interrupt Request Flag (IFAD: $003, Bit 2)

IFAD	Interrupt Request
0	No
1	Yes

A/D Interrupt Mask (IMAD: $003, Bit 3): Prevents (masks) an interrupt request caused by the A/D interrupt request flag, as listed in table 12.

Table 12 A/D Interrupt Mask (IMAD: $003, Bit 3)

IMAD	Interrupt Request
0	Enabled
1	Disabled (masked)

Operating Modes

The MCU has five operating modes as shown in table 13. The operations in each mode are listed in tables 14 and 15. Transitions between operating modes are shown in figure 14.

Active Mode: All MCU functions operate according to the clock generated by the system oscillator OSC_1 and OSC_2.

Table 13 Operating Modes and Clock Status

		Mode Name				
		Active	**Standby**	**Stop**	**Watch**	**Subactive*2**
Activation method		RESET cancellation, interrupt request, $\overline{STOPC}$ cancellation in stop mode, STOP/SBY instruction in subactive mode (when direct transfer is selected)	SBY instruction from active mode	STOP instruction when TMA3 = 0	STOP instruction when TMA3 = 1 or SBY instruction from subactive mode (when LSON = 1, or LSON and DTON are both 0)	AN interrupt request from timer A or $\overline{INT_0}$ in watch mode when LSON = 1
Status	System oscillator	Operating	Operating	Stopped	Stopped	Stopped
	Subsystem oscillator	Operating *1	Operating *1	Operating *1	Operating *1	Operating *1
Cancellation method		RESET input, STOP/SBY instruction	RESET input, interrupt request	RESET input, $\overline{STOPC}$ input in stop mode	RESET input, $\overline{INT_0}$ or timer A interrupt request	RESET input, STOP/SBY instruction

Notes: 1. Operating or stopping the oscillator can be selected by setting bit 3 of the system clock select register (SSR: $029).
2. Subactive mode is an optional function; specify it on the function option list.

Table 14 Operations in Low-Power Dissipation Modes

Function	Stop Mode	Watch Mode	Standby Mode	Subactive Mode*2
CPU	Reset	Retained	Retained	Operating
RAM	Retained	Retained	Retained	Operating
Timer A	Reset	Operating	Operating	Operating
Timer B	Reset	Stopped	Operating	Operating
Timer C	Reset	Stopped	Operating	Operating
Timer D	Reset	Stopped	Operating	Operating
Serial interface	Reset	Stopped*3	Operating	Operating
A/D	Reset	Stopped	Operating	Stopped
LCD	Reset	Operating *4	Operating	Operating
I/O	Reset*1	Retained	Retained	Operating

Notes: 1. Output pins are at high impedance.
2. Subactive mode is an optional function specified on the function option list.
3. Transmission/Reception is activated if a clock is input in external clock mode. However, interrupts stop.
4. When a 32-kHz clock source is used.

Table 15 I/O Status in Low-Power Dissipation Modes

	Output		Input
	Standby Mode, Watch Mode	Stop Mode	Active Mode, Subactive Mode
D_0–D_9	Retained	High impedance	Input enabled
D_{10}–D_{11}	—	—	Input enabled
R0–R7	Retained or output of peripheral functions	High impedance	Input enabled

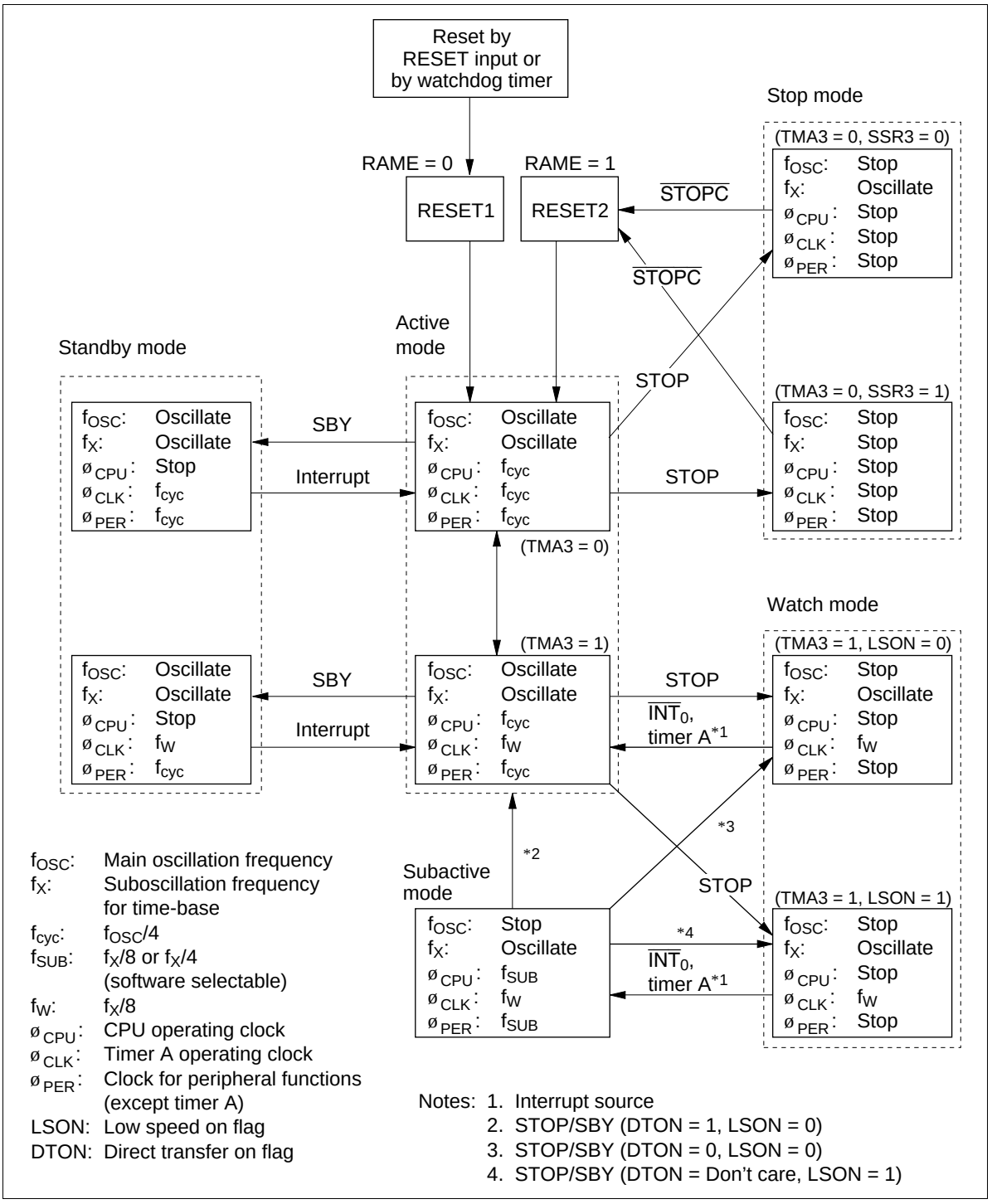

Figure 14 MCU Status Transitions

Standby Mode: In standby mode, the oscillators continue to operate, but the clocks related to instruction execution stop. Therefore, the CPU operation stops, but all RAM and register contents are retained, and the D or R port status, when set to output, is maintained. Peripheral functions such as interrupts, timers, and serial interface continue to operate. The power dissipation in this mode is lower than in active mode because the CPU stops.

The MCU enters standby mode when the SBY instruction is executed in active mode.

Standby mode is terminated by a RESET input or an interrupt request. If it is terminated by RESET input, the MCU is reset as well. After an interrupt request, the MCU enters active mode and executes the next instruction after the SBY instruction. If the interrupt enable flag is 1, the interrupt is then processed; if it is 0, the interrupt request is left pending and normal instruction execution continues. A flowchart of operation in standby mode is shown in figure 15.

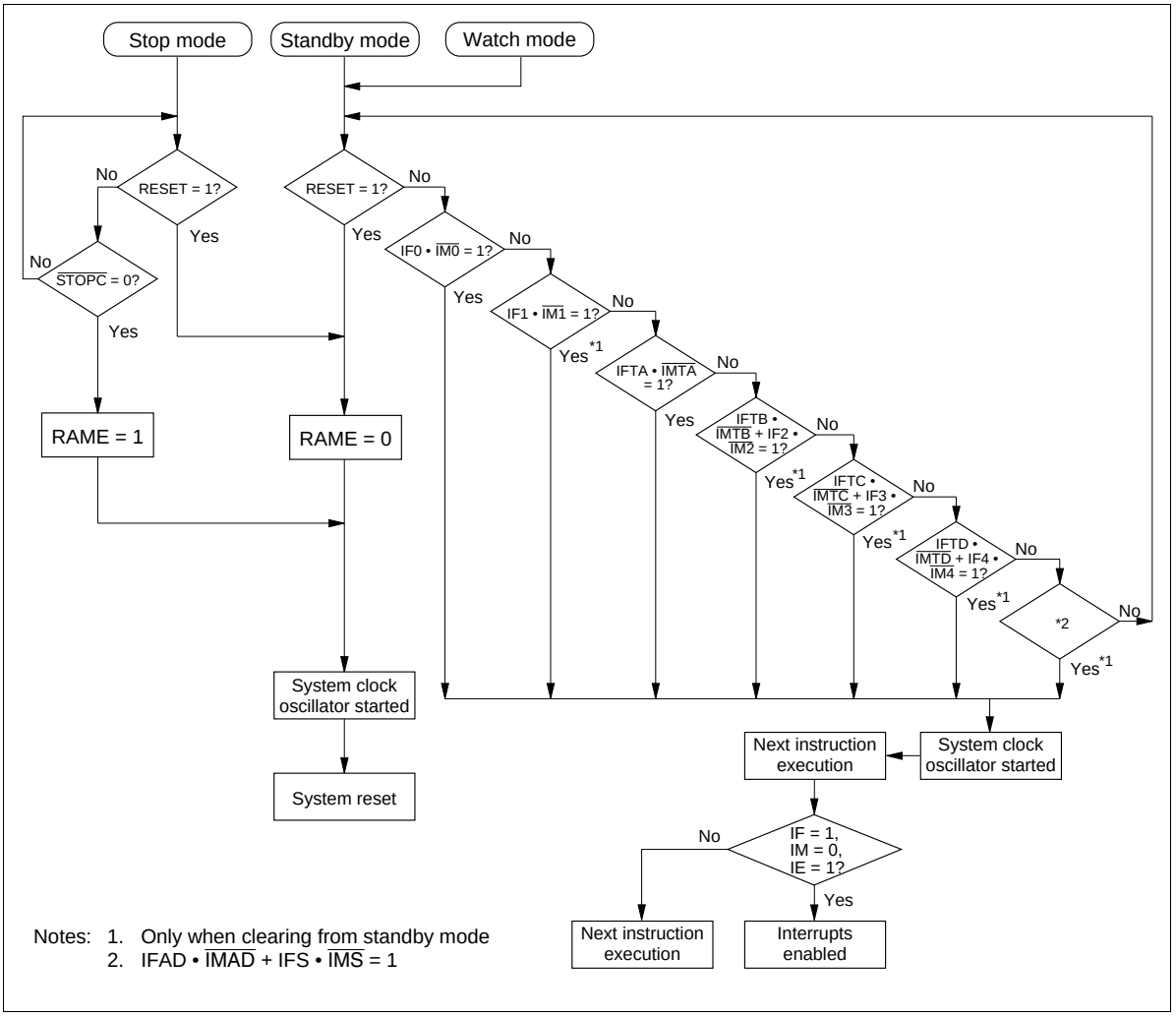

Figure 15 MCU Operation Flowchart

Stop Mode: In stop mode, all MCU operations stop and RAM data is retained. Therefore, the power dissipation in this mode is the least of all modes. The OSC_1 and OSC_2 oscillator stops. For the X1 and X2 oscillator to operate or stop can be selected by setting bit 3 of the system clock select register (SSR: $029; operating: SSR3 = 0, stop: SSR3 = 1) (figure 27). The MCU enters stop mode if the STOP instruction is executed in active mode when bit 3 of timer mode register A (TMA: $008) is set to 0 (TMA3 = 0) (figure 44).

Stop mode is terminated by a RESET input or a $\overline{STOPC}$ input as shown in figure 16. RESET or $\overline{STOPC}$ must be applied for at least one t_{RC} to stabilize oscillation (refer to the AC Characteristics section). When the MCU restarts after stop mode is cancelled, all RAM contents before entering stop mode are retained, but the accuracy of the contents of the accumulator, B register, W register, X/SPX register, Y/SPY register, carry flag, and serial data register cannot be guaranteed.

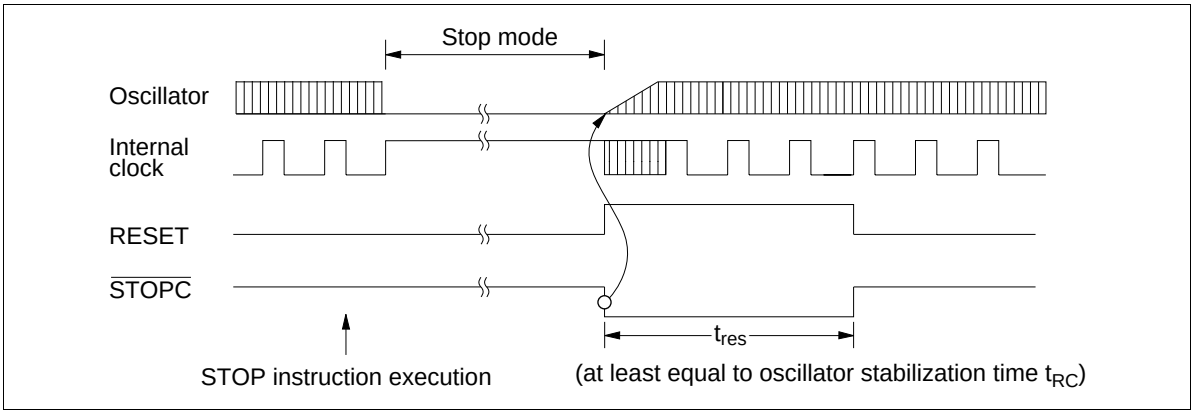

Figure 16 Timing of Stop Mode Cancellation

Watch Mode: In watch mode, the clock function (timer A) using the X1 and X2 oscillator and the LCD function operate, but other function operations stop. Therefore, the power dissipation in this mode is the second least to stop mode, and this mode is convenient when only clock display is used. In this mode, the OSC_1 and OSC_2 oscillator stops, but the X1 and X2 oscillator operates. The MCU enters watch mode if the STOP instruction is executed in active mode when TMA3 = 1, or if the STOP or SBY instruction is executed in subactive mode.

Watch mode is terminated by a RESET input or a timer-A/$\overline{INT_0}$ interrupt request. For details of RESET input, refer to the Stop Mode section. When terminated by a timer-A/$\overline{INT_0}$ interrupt request, the MCU enters active mode if LSON = 0, or subactive mode if LSON = 1. After an interrupt request is generated, the time required to enter active mode is t_{RC} for a timer A interrupt, and T_X (where $T + t_{RC} < T_X < 2T + t_{RC}$) for an $\overline{INT_0}$ interrupt, as shown in figures 17 and 18.

Operation during mode transition is the same as that at standby mode cancellation (figure 15).

Subactive Mode: The OSC_1 and OSC_2 oscillator stops and the MCU operates with a clock generated by the X1 and X2 oscillator. In this mode, functions except the A/D conversion operate. However, because the operating clock is slow, the power dissipation becomes low, next to watch mode.

The CPU instruction execution speed can be selected as 244 µs or 122 µs by setting bit 2 (SSR2) of the system clock select register (SSR: $029). Note that the SSR2 value must be changed in active mode. If the value is changed in subactive mode, the MCU may malfunction.

When the STOP or SBY instruction is executed in subactive mode, the MCU enters either watch or active mode, depending on the statuses of the low speed on flag (LSON: $020, bit 0) and the direct transfer on flag (DTON: $020, bit 3).

Subactive mode is an optional function that the user must specify on the function option list.

Interrupt Frame: In watch and subactive modes, ϕ_{CLK} is applied to timer A and the $\overline{INT}_0$ circuit. Prescaler W and timer A operate as the time-base and generate the timing clock for the interrupt frame. Three interrupt frame lengths (T) can be selected by setting the miscellaneous register (MIS: $00C) (figure 18).

In watch and subactive modes, the timer-A/$\overline{INT}_0$ interrupt is generated synchronously with the interrupt frame. The interrupt request is generated synchronously with the interrupt strobe timing except during transition to active mode. The falling edge of the $\overline{INT}_0$ signal is input asynchronously with the interrupt frame timing, but it is regarded as input synchronously with the second interrupt strobe clock after the falling edge. An overflow and interrupt request in timer A is generated synchronously with the interrupt strobe timing.

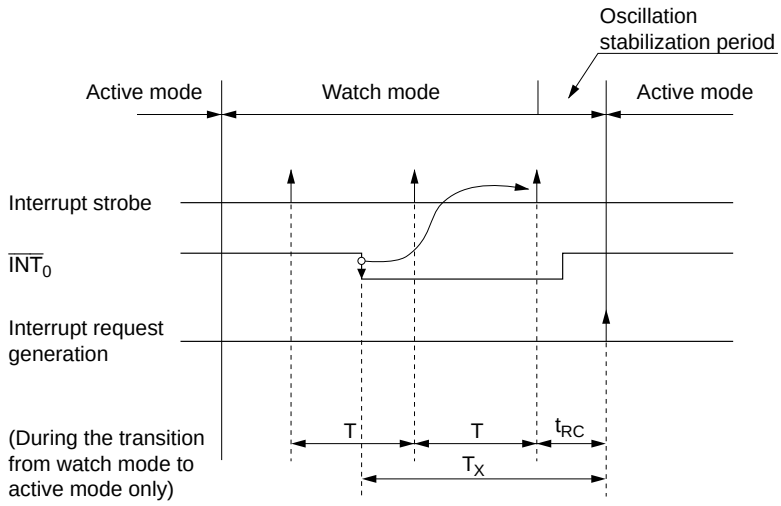

T: Interrupt frame length
t_{RC} : Oscillation stabilization period

Note: If the time from the fall of the $\overline{INT}_0$ signal until the interrrupt is accepted and active mode is entered and is designated Tx, then Tx will be in the following range:
$T + t_{RC} \leq Tx \leq 2T + t_{RC}$

Figure 17 Interrupt Frame

Direct Transition from Subactive Mode to Active Mode: Available by controlling the direct transfer on flag (DTON: $020, bit 3) and the low speed on flag (LSON: $020, bit 0). The procedures are described below:

- Set LSON to 0 and DTON to 1 in subactive mode.
- Execute the STOP or SBY instruction.
- The MCU automatically enters active mode from subactive mode after waiting for the MCU internal processing time and oscillation stabilization time (figure 19).

Notes: 1. The DTON flag can be set only in subactive mode. It is always reset in active mode.
2. The transition time (T_D) from subactive mode to active mode:
$t_{RC} < T_D < T + t_{RC}$

Miscellaneous register (MIS: $00C)

Bit	3	2	1	0
Initial value	0	0	0	0
Read/Write	W	W	W	W
Bit name	MIS3	MIS2	MIS1	MIS0

MIS3	MIS2	MIS1	MIS0	T*1	t_{RC}*1	Oscillation circuit conditions
Buffer control. Refer to figure 41.		0	0	0.24414 ms	0.12207 ms	External clock input
					0.24414 ms*2	
		0	1	15.625 ms	7.8125 ms	Ceramic oscillator
		1	0	62.5 ms	31.25 ms	Crystal oscillator
		1	1	Not used	Not used	—

Notes: 1. Values of T and t_{RC} when a 32.768-kHz crystal oscillator is used to pins ×1 and ×2.
2. The value is applied only when direct transfer operation is used.

Figure 18 Miscellaneous Register (MIS)

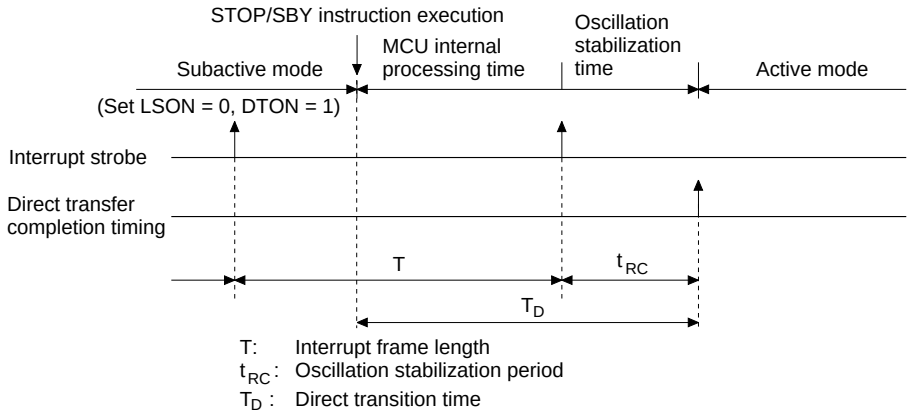

Figure 19 Direct Transition Timing

Stop Mode Cancellation by $\overline{\text{STOPC}}$: The MCU enters active mode from stop mode by inputting $\overline{\text{STOPC}}$ as well as by RESET. In either case, the MCU starts instruction execution from the starting address (address 0) of the program. However, the value of the RAM enable flag (RAME: $021, bit 3) differs between cancellation by $\overline{\text{STOPC}}$ and by RESET. When stop mode is cancelled by RESET, RAME = 0; when cancelled by $\overline{\text{STOPC}}$, RAME = 1. RESET can cancel all modes, but $\overline{\text{STOPC}}$ is valid only in stop mode; $\overline{\text{STOPC}}$ input is ignored in other modes. Therefore, when the program requires to confirm that stop mode has been cancelled by $\overline{\text{STOPC}}$ (for example, when the RAM contents before entering stop mode is used after transition to active mode), execute the TEST instruction to the RAM enable flag (RAME) at the beginning of the program.

MCU Operation Sequence: The MCU operates in the sequence shown in figures 20 to 22. It is reset by an asynchronous RESET input, regardless of its status.

The low-power mode operation sequence is shown in figure 22. With the IE flag cleared and an interrupt flag set together with its interrupt mask cleared, if a STOP/SBY instruction is executed, the instruction is cancelled (regarded as an NOP) and the following instruction is executed. Before executing a STOP/SBY instruction, make sure all interrupt flags are cleared or all interrupts are masked.

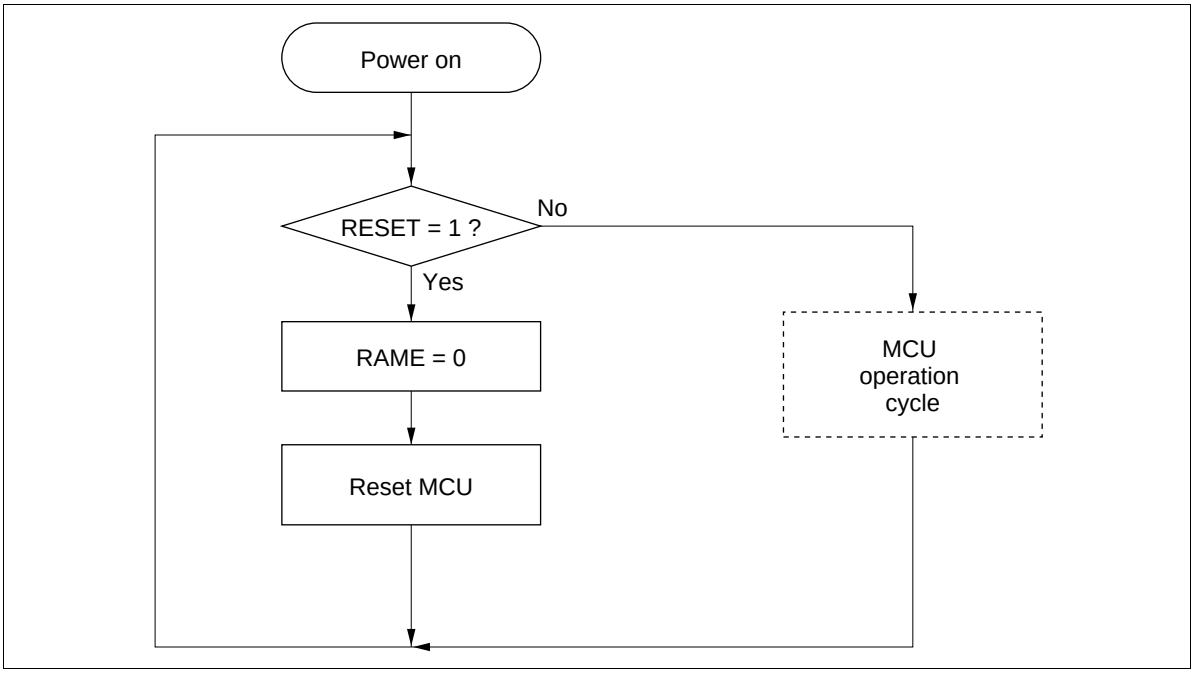

Figure 20 MCU Operating Sequence (Power On)

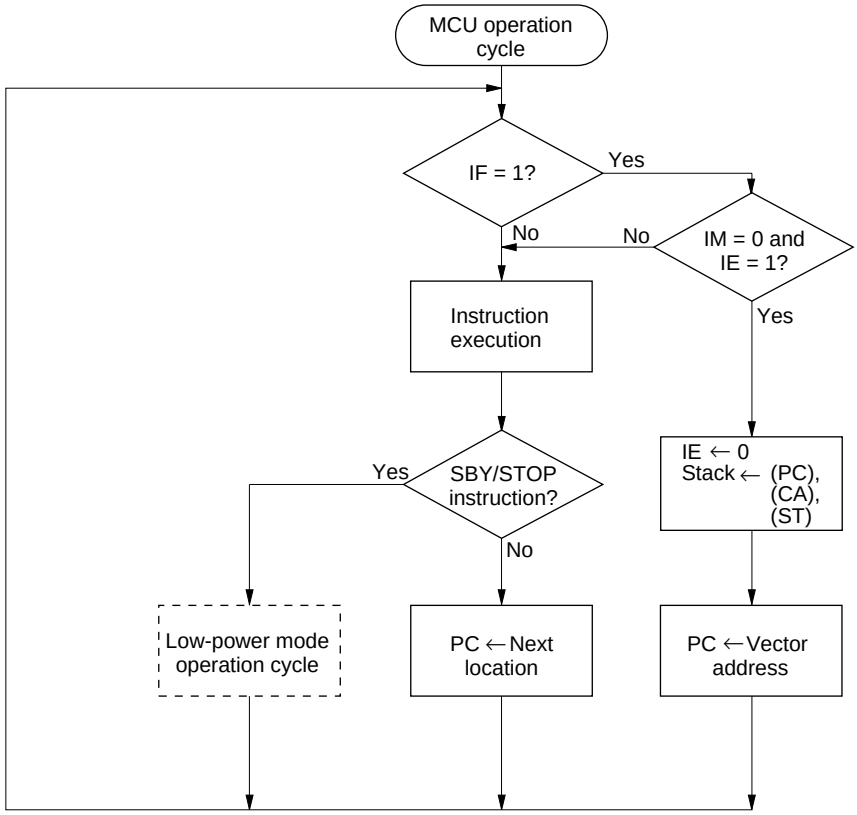

IF: Interrupt request flag
IM: Interrupt mask
IE: Interrupt enable flag
PC: Program counter
CA: Carry flag
ST: Status flag

Figure 21 MCU Operating Sequence (MCU Operation Cycle)

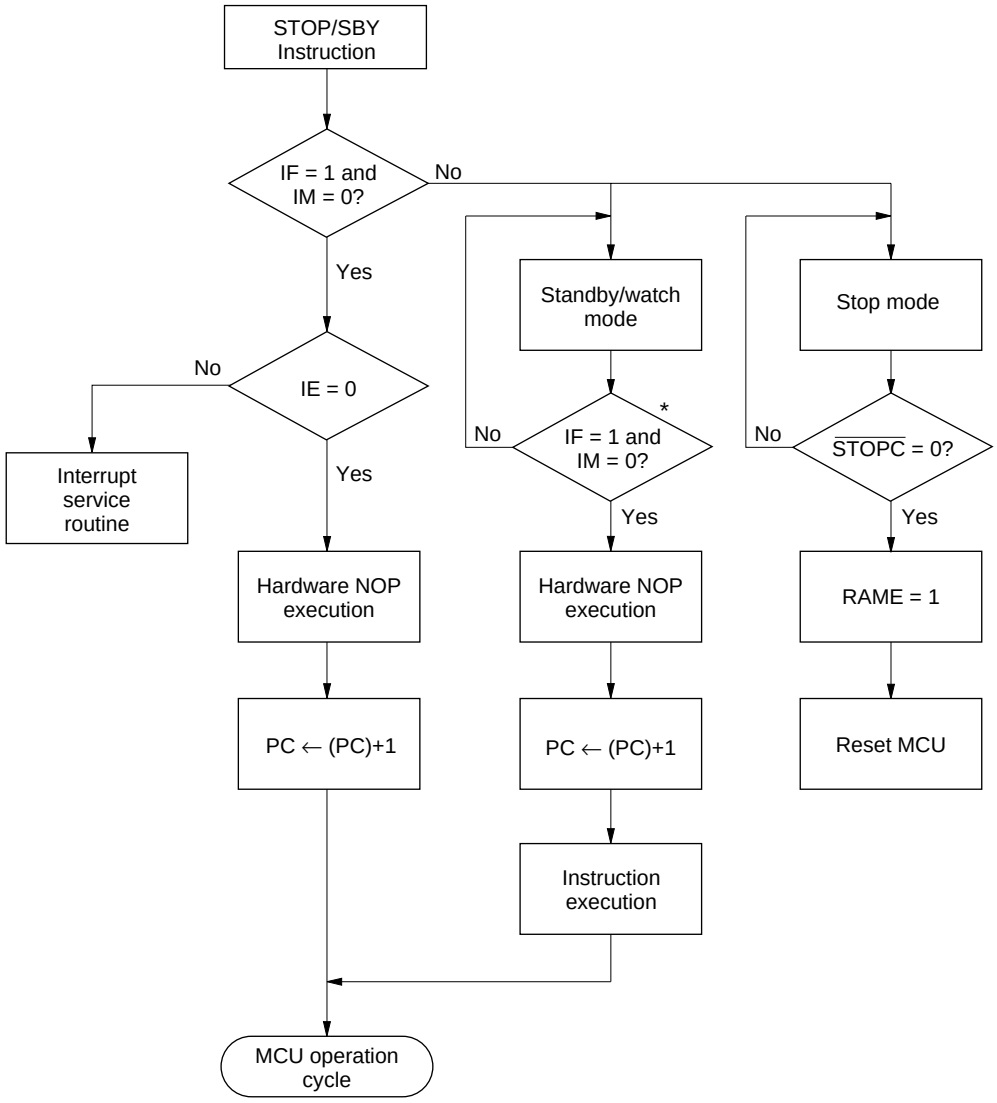

Note: *Refer to figure 15, Flowchart for Exiting Low Power Modes, for IF and IM operation.

Figure 22 MCU Operating Sequence (Low-Power Mode Operation)

Notes: 1. When watch mode or subactive mode on HD404829R Series/HD4074829 is used and the LCD function is off in that mode, the watch mode or subactive mode current is larger, and consequently the following settings should be made.

Perform the following writes in the order shown before the transition to watch mode (before execution of the STOP instruction):

Write $0 to LCR
Write $3 to LMR

Also, when returning to active mode from watch mode or subactive mode, perform the following writes in the order shown:

Write a value appropriate to the conditions of use to LMR
Write a value appropriate to the conditions of use to LCR

A sample programming flowchart for the above procedures is shown in figure 23.

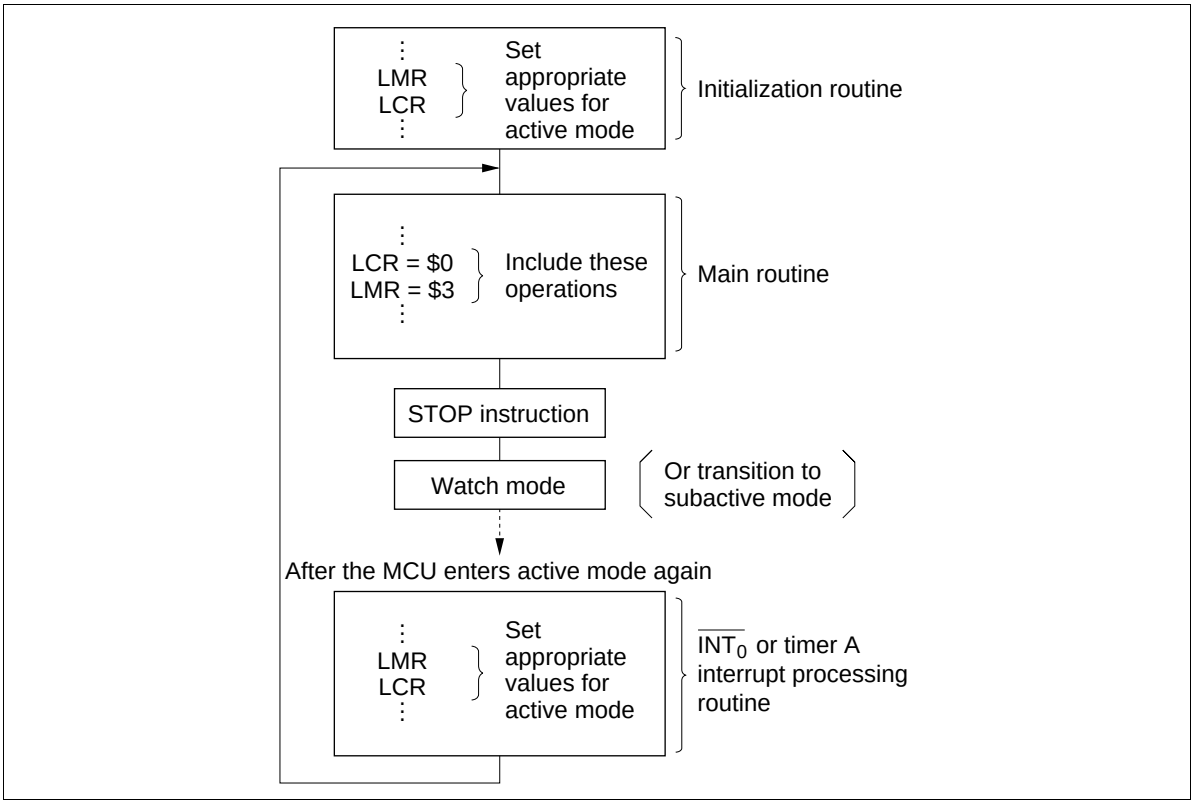

Figure 23 Programming Flowchart (LCD Display Off in Watch or Subactive Mode)

Notes: 2. When the MCU is in watch mode or subactive mode, if the high level period before the falling edge of $\overline{INT_0}$ is shorter than the interrupt frame, $\overline{INT_0}$ is not detected. Also, if the low level period after the falling edge of $\overline{INT_0}$ is shorter than the interrupt frame, $\overline{INT_0}$ is not detected.

Edge detection is shown in figure 24. The level of the $\overline{INT_0}$ signal is sampled by a sampling clock. When this sampled value changes to low from high, a falling edge is detected.
In figure 25, the level of the $\overline{INT_0}$ signal is sampled by an interrupt frame. In (a) the sampled value is low at point A, and also low at point B. Therefore, a falling edge is not detected. In (b), the sampled value is high at point A, and also high at point B. A falling edge is not detected in this case either.

When the MCU is in watch mode or subactive mode, keep the high level and low level period of $\overline{INT_0}$ longer than interrupt frame.

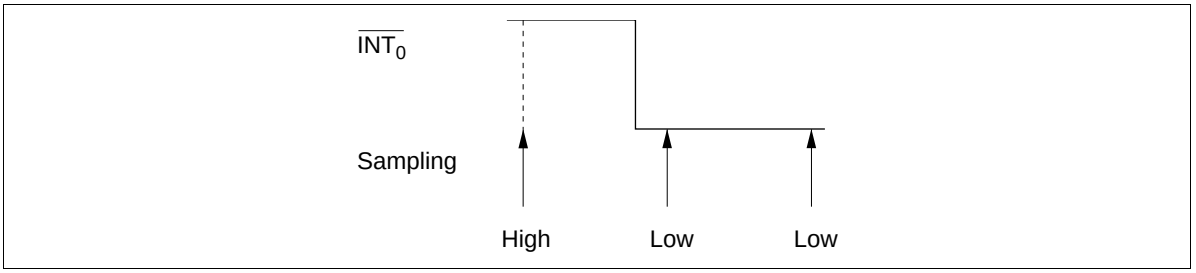

Figure 24 Edge Detection

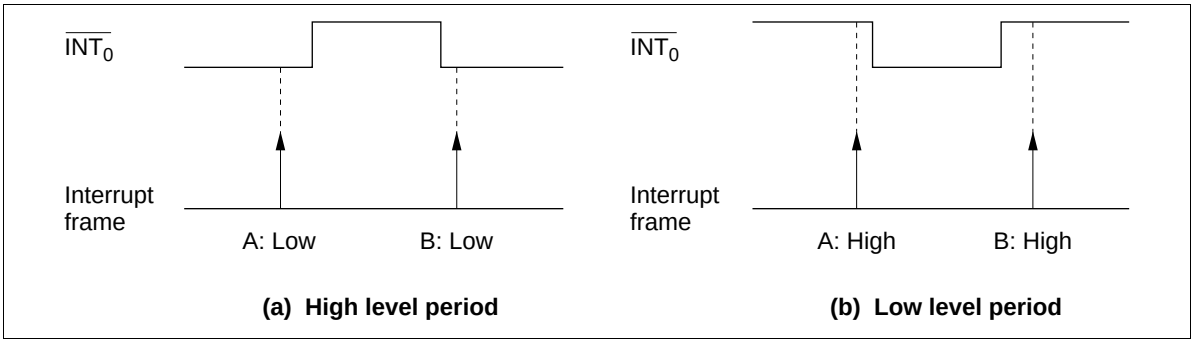

Figure 25 Sampling Example

Internal Oscillator Circuit

A block diagram of the clock generation circuit is shown in figure 26. As shown in table 16, a ceramic oscillator can be connected to OSC_1 and OSC_2, and a 32.768-kHz oscillator can be connected to X1 and X2. The system oscillator can also be operated by an external clock. Bit 1 (SSR1) of the system clock select register (SSR: $029) must be set according to the frequency of the oscillator connected to OSC_1 and OSC_2 (figure 27).

Note: If the system clock select register (SSR: $029) setting does not match the oscillator frequency, DTMF generator and subsystems using the 32.768-kHz oscillation will malfunction.

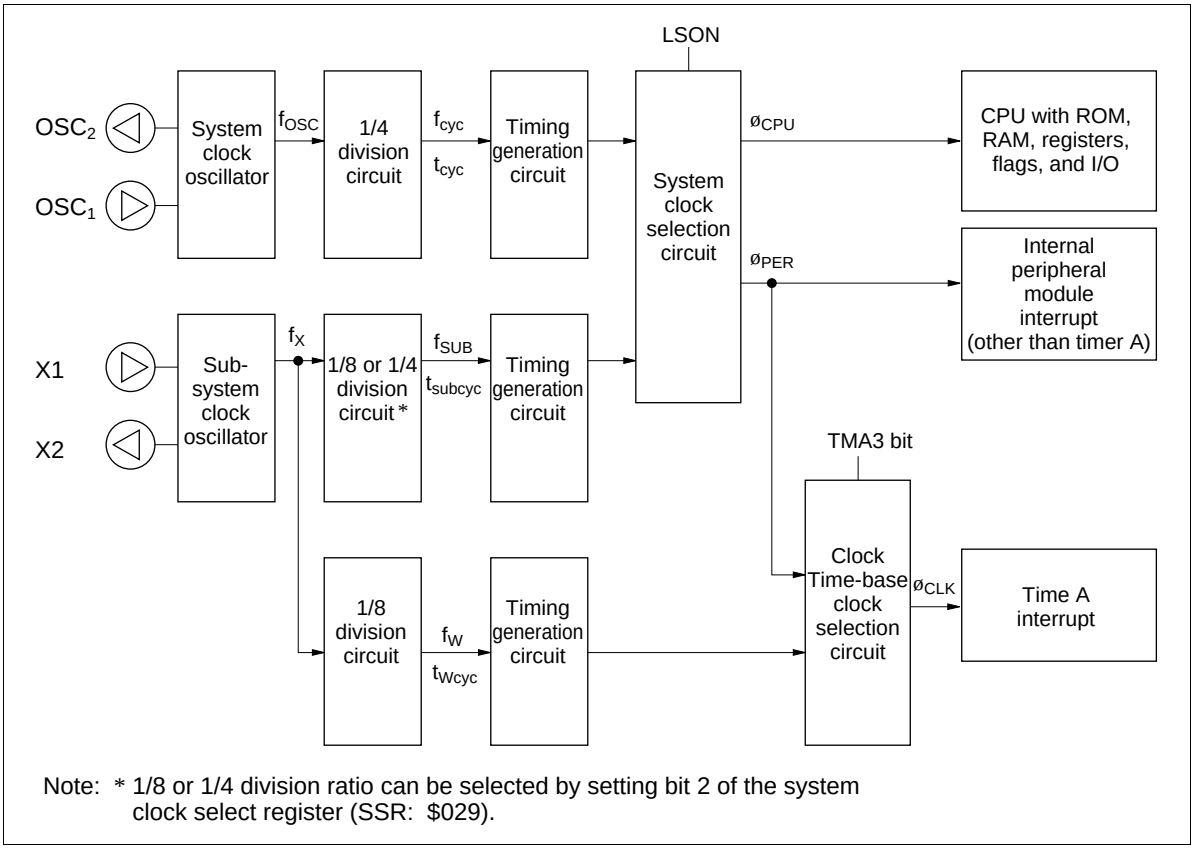

Note: * 1/8 or 1/4 division ratio can be selected by setting bit 2 of the system clock select register (SSR: $029).

Figure 26 Clock Generation Circuit

System clock select register (SSR: $029)

Bit	3	2	1	0
Initial value	0	0	—	—
Read/Write	W	W	—	—
Bit name	SSR3	SSR2	—	—

SSR3	32-kHz oscillation stop
0	Oscillation operates in stop mode
1	Oscillation stops in stop mode

SSR1	System clock selection
0	f_{OSC} = 400 kHz to 1 MHz
1	f_{OSC} = 1.6 to 4.2 MHz

SSR2	32-kHz oscillation division ratio selection
0	$f_{SUB} = f_X/8$
1	$f_{SUB} = f_X/4$

Note: SSR3 is cleared only by a RESET input. SSR3 will not be cleared by a $\overline{STOPC}$ input duringstop mode, and will retain its value. SSR3 will also not be cleared upon entering stop mode.

Figure 27 System Clock Select Register (SSR)

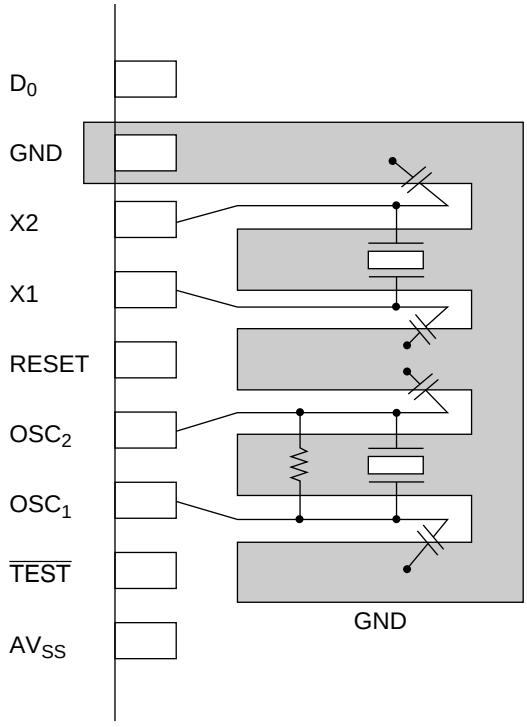

Figure 28 Typical Layouts of Crystal and Ceramic Oscillator

Table 16 Oscillator Circuit Examples

	Circuit Configuration	Circuit Constants
External clock operation	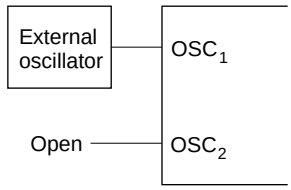	—
Ceramic oscillator (OSC_1, OSC_2)	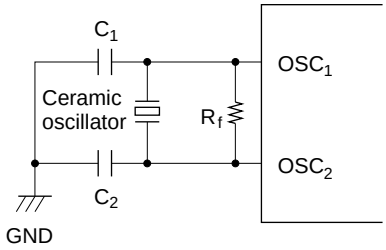	Ceramic oscillator: CSB400P22 (Murata) CSB400P (Murata) R_f = 1 MΩ ± 20% C1 = C2 = 220 pF ± 5% Ceramic oscillator: CSB800J122 (Murata) CSB800J (Murata) R_f = 1 MΩ ± 20% $C_1 = C_2$ = 220 pF ± 5% Ceramic oscillator: CSA2.00MG (Murata) R_f = 1 MΩ ± 20% $C_1 = C_2$ = 30 pF ± 20% Ceramic oscillator: CSA4.00MG (Murata) R_f = 1 MΩ ± 20% $C_1 = C_2$ = 30 pF ± 20%
Crystal oscillator (OSC_1, OSC_2)	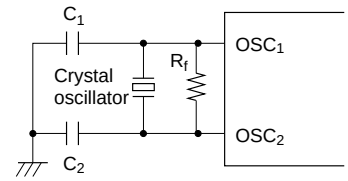 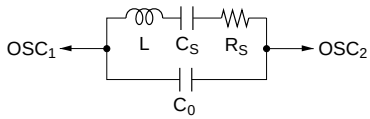	R_f = 1 MΩ ± 20% $C_1 = C_2$ = 10 to 22pF ± 20% Crystal : Equivalent circuit at left C_0 =7pF max R_S = 100Ω max
Crystal oscillator (X1, X2)	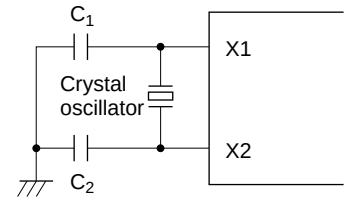 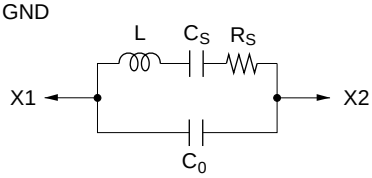	Crystal oscillator: 32.768 kHz: MX38T (Nippon Denpa) $C_1 = C_2$ = 20 pF ± 20% R_S: 14 kΩ C_0: 1.5 pF

Notes: 1. Circuit constants differ by the different types of crystal oscillators, ceramic oscillators, and with the stray capacitance of the board, so consult the manufacturer of the oscillator to determine the circuit parameters.

2. The wiring between the OSC_1, OSC_2 (X1 and X2 pins), and the other elements should be as short as possible, and must not cross other wiring. Refer to figure 28.

3. If not using a 32.768-kHz crystal oscillator, fix the X1 pin to V_{CC} and leave the X2 pin open.

Input/Output

The MCU has 42 input/output pins (D_0–D_9, $R0_0$–$R7_3$) and 2 input pins (D_{10}, D_{11}). The features are described below.

- Ten pins (D_0–D_9) are high-current input/output pins.
- The D_{10} and D_{11}, and $R0_0$–$R7_3$ input/output pins are multiplexed with peripheral function pins such as for the timers or serial interface. For these pins, the peripheral function setting is done prior to the D or R port setting. Therefore, when a peripheral function is selected for a pin, the pin function and input/output selection are automatically switched according to the setting.
- Input or output selection for input/output pins and port or peripheral function selection for multiplexed pins are set by software.
- Peripheral function output pins are CMOS output pins. Only the $R2_3$/SO pin can be set to NMOS open-drain output by software.
- In stop mode, the MCU is reset, and therefore peripheral function selection is cancelled. Input/output pins are in high-impedance state.
- Each input/output pin has a built-in pull-up MOS, which can be individually turned on or off by software.

I/O buffer configuration is shown in figure 29, programmable I/O circuits are listed in table 17, and I/O pin circuit types are shown in table 18.

Table 17 Programmable I/O Circuits

MIS3 (bit 3 of MIS)		**0**				**1**			
DCD, DCR		**0**		**1**		**0**		**1**	
PDR		**0**	**1**	**0**	**1**	**0**	**1**	**0**	**1**
CMOS buffer	PMOS	—	—	—	On	—	—	—	On
	NMOS	—	—	On	—	—	—	On	—
Pull-up MOS		—	—	—	—	—	On	—	On

Note: — indicates off status.

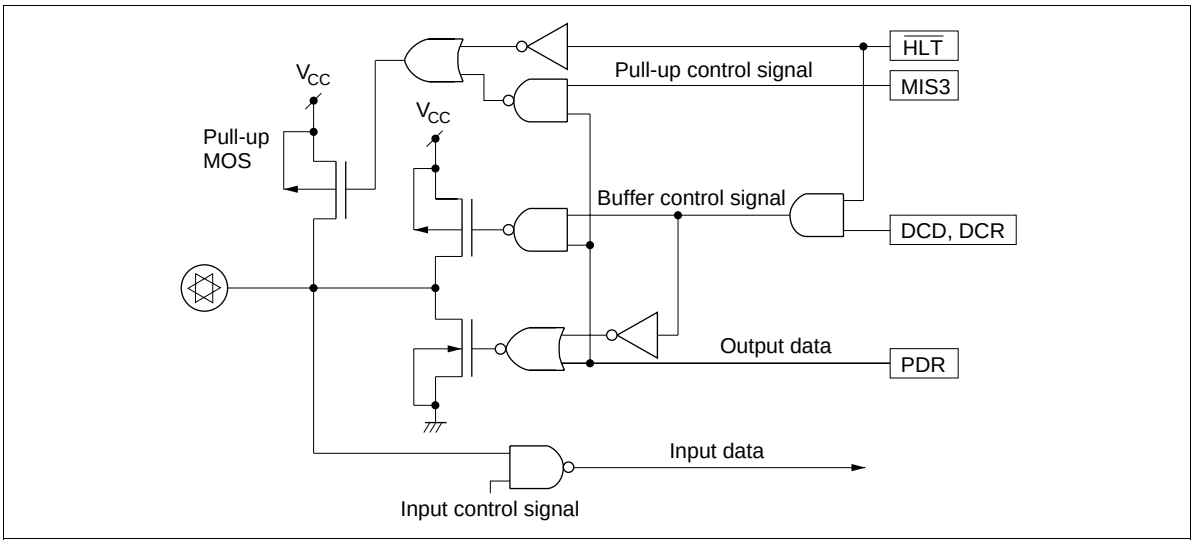

Figure 29 I/O Buffer Configuration

Table 18 Circuit Configurations of I/O Pins

I/O Pin Type	Circuit	Pins
Input/output pins	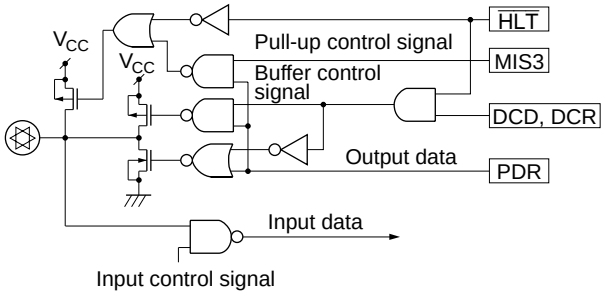	D_0–D_9 $R0_0$–$R0_3$ $R1_0$–$R1_3$ $R2_0$–$R2_2$ $R3_0$–$R3_3$ $R4_0$–$R4_3$ $R5_0$–$R5_3$ $R6_0$–$R6_3$ $R7_0$–$R7_3$
	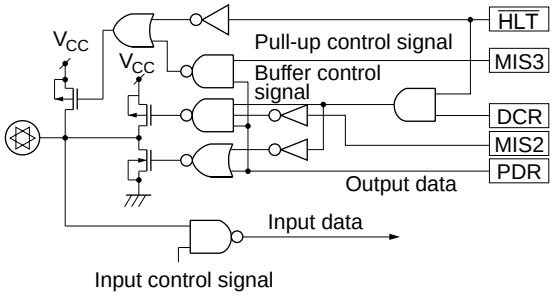	$R2_3$
Input pins	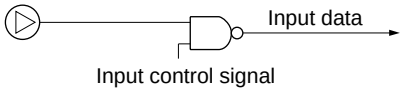	D_{10}, D_{11}

Table 18 Circuit Configurations of I/O Pins (cont)

I/O Pin Type		Circuit	Pins
Peripheral function pins	Input/output pins	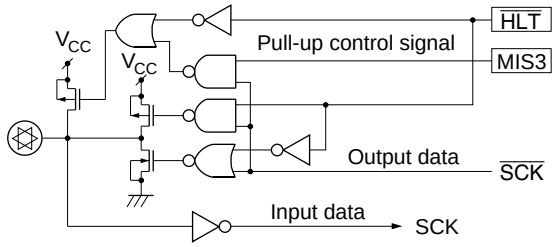	SCK
	Output pins	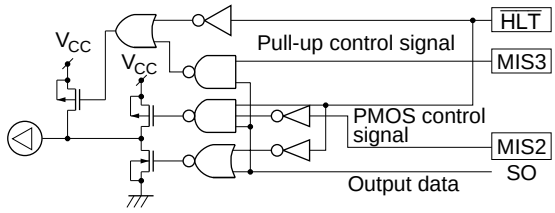	SO
		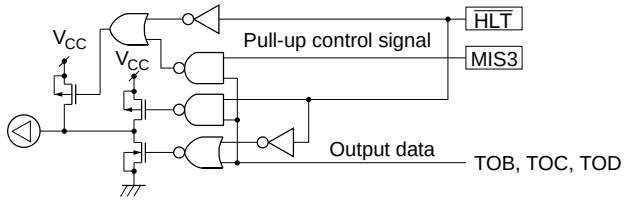	TOB, TOC, TOD
	Input pins	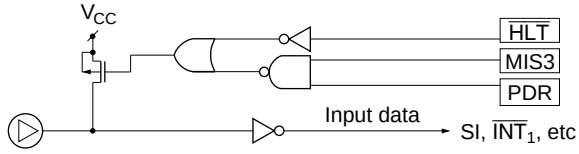	SI, $\overline{INT_1}$, INT_2, INT_3, INT_4, $\overline{EVNB}$, EVND
		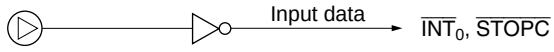	$\overline{INT_0}$, $\overline{STOPC}$

Notes: 1. The MCU is reset in stop mode, and peripheral function selection is cancelled. The $\overline{HLT}$ signal becomes low, and input/output pins enter high-impedance state.

2. The $\overline{HLT}$ signal is 1 in watch and subactive modes.

D Port (D_0–D_{11}): Consist of 10 input/output pins and 2 input pins addressed by one bit. D_0–D_9 are high-current I/O pins, and D_{10} and D_{11} are input-only pins.

Pins D_0–D_9 are set by the SED and SEDD instructions, and reset by the RED and REDD instructions. Output data is stored in the port data register (PDR) for each pin. All pins D_0–D_{11} are tested by the TD and TDD instructions.

The on/off statuses of the output buffers are controlled by D-port data control registers (DCD0–DCD2: $02C–$02E) that are mapped to memory addresses (figure 30).

Pins D_{10} and D_{11} are multiplexed with peripheral function pins $\overline{STOPC}$ and $\overline{INT}_0$, respectively. The peripheral function modes of these pins are selected by bits 2 and 3 (PMRC2, PMRC3) of port mode register C (PMRC: $025) (figure 31).

R Ports ($R0_0$–$R7_3$): 32 input/output pins addressed in 4-bit units. Data is input to these ports by the LAR and LBR instructions, and output from them by the LRA and LRB instructions. Output data is stored in the port data register (PDR) for each pin. The on/off statuses of the output buffers of the R ports are controlled by R-port data control registers (DCR0–DCR7: $030–$037) that are mapped to memory addresses (figure 30).

Pins $R0_0$–$R0_3$ are multiplexed with peripheral pins $\overline{INT}_1$–INT_4, respectively. The peripheral function modes of these pins are selected by bits 0–3 (PMRB0–PMRB3) of port mode register B (PMRB: $024) (figure 32).

Pins $R1_0$–$R1_2$ are multiplexed with peripheral pins TOB, TOC, and TOD, respectively. The peripheral function modes of these pins are selected by bits 0 and 1 (TMB20, TMB21) of timer mode register B2 (TMB2: $013), bits 0–2 (TMC20–TMC22) of timer mode register C2 (TMC2: $014), and bits 0–3 (TMD20–TMD23) of timer mode register D2 (TMD2: $015) (figures 33, 34, and 35).

Pins $R1_3$ and $R2_0$ are multiplexed with peripheral pins $\overline{EVNB}$ and EVND, respectively. The peripheral function modes of these pins are selected by bits 0 and 1 (PMRC0, PMRC1) of port mode register C (PMRC: $025) (figure 31).

Pins $R2_1$–$R2_3$ are multiplexed with peripheral pins $\overline{SCK}$, SI, and SO, respectively. The peripheral function modes of these pins are selected by bit 3 (SMRA3) of serial mode register A (SMRA: $005), and bits 0 and 1 (PMRA0, PMRA1) of port mode register A (PMRA: $004), as shown in figures 36 and 37.

Ports R3 and R4 are multiplexed with segment pins SEG1–SEG8, respectively. The function modes of these pins can be selected by individual pins, by setting LCD output registers 1 and 2 (LOR1, LOR2: $01D, $01F) (figures 38 and 39).

Ports R5–R7 are multiplexed with segment pins SEG9–SEG20, respectively. The function modes of these pins can be selected in 4-pin units by setting LCD output register 3 (LOR3: $01F) (figure 40).

Data control register (DCD0 to 2: $02C to $02E)
(DCR0 to 7: $030 to $037)

DCD0, DCD1

Bit	3	2	1	0
Initial value	0	0	0	0
Read/Write	W	W	W	W
Bit name	DCD03, DCD13	DCD02, DCD12	DCD01, DCD11	DCD00, DCD10

DCD2

Bit	3	2	1	0
Initial value	—	—	0	0
Read/Write	—	—	W	W
Bit name	Not used	Not used	DCD21	DCD20

DCR0 to DCR7

Bit	3	2	1	0
Initial value	0	0	0	0
Read/Write	W	W	W	W
Bit name	DCR03–DCR73	DCR02–DCR72	DCR01–DCR71	DCR00–DCR70

All Bits	CMOS Buffer On/Off Selection
0	Off (high-impedance)
1	On

Correspondence between ports and DCD/DCR bits

Register Name	Bit 3	Bit 2	Bit 1	Bit 0
DCD0	D_3	D_2	D_1	D_0
DCD1	D_7	D_6	D_5	D_4
DCD2	—	—	D_9	D_8
DCR0	$R0_3$	$R0_2$	$R0_1$	$R0_0$
DCR1	$R1_3$	$R1_2$	$R1_1$	$R1_0$
DCR2	$R2_3$	$R2_2$	$R2_1$	$R2_0$
DCR3	$R3_3$	$R3_2$	$R3_1$	$R3_0$
DCR4	$R4_3$	$R4_2$	$R4_1$	$R4_0$
DCR5	$R5_3$	$R5_2$	$R5_1$	$R5_0$
DCR6	$R6_3$	$R6_2$	$R6_1$	$R6_0$
DCR7	$R7_3$	$R7_2$	$R7_1$	$R7_0$

Figure 30 Data Control Registers (DCD, DCR)

Port mode register C (PMRC: $025)

Bit	3	2	1	0
Initial value	0	0	0	0
Read/Write	W	W	W	W
Bit name	PMRC3	PMRC2*	PMRC1	PMRC0

PMRC3	$D_{11}/\overline{INT_0}$ mode selection
0	D_{11}
1	$\overline{INT_0}$

PMRC0	$R1_3/\overline{EVNB}$ mode selection
0	$R1_3$
1	$\overline{EVNB}$

PMRC2	$D_{10}/\overline{STOPC}$ mode selection
0	D_{10}
1	$\overline{STOPC}$

PMRC1	$R2_0$/EVND mode selection
0	$R2_0$
1	EVND

Note: * PMRC2 is reset to 0 only by RESET input. When $\overline{STOPC}$ is input in stop mode, PMRC2 is not reset but retains its value.

Figure 31 Port Mode Register C (PMRC)

Port mode register B (PMRB: $024)

Bit	3	2	1	0
Initial value	0	0	0	0
Read/Write	W	W	W	W
Bit name	PMRB3	PMRB2	PMRB1	PMRB0

PMRB3	$R0_3/INT_4$ mode selection
0	$R0_3$
1	INT_4

PMRB0	$R0_0/\overline{INT_1}$ mode selection
0	$R0_0$
1	$\overline{INT_1}$

PMRB2	$R0_2/INT_3$ mode selection
0	$R0_2$
1	INT_3

PMRB1	$R0_1/INT_2$ mode selection
0	$R0_1$
1	INT_2

Figure 32 Port Mode Register B (PMRB)

Timer mode register B2 (TMB2: $013)

Bit	3	2	1	0
Initial value	—	—	0	0
Read/Write	—	—	R/W	R/W
Bit name	Not used	Not used	TMB21	TMB20

TMB21	TMB20	$R1_0$/TOB mode selection	
0	0	$R1_0$	$R1_0$ port
	1	TOB	Toggle output
1	0	TOB	0 output
	1	TOB	1 output

Figure 33 Timer Mode Register B2 (TMB2)

Timer mode register C2 (TMC2: $014)

Bit	3	2	1	0
Initial value	—	0	0	0
Read/Write	—	R/W	R/W	R/W
Bit name	Not used	TMC22	TMC21	TMC20

TMC22	TMC21	TMC20	$R1_1$/TOC mode selection	
0	0	0	$R1_1$	$R1_1$ port
		1	TOC	Toggle output
	1	0	TOC	0 output
		1	TOC	1 output
1	0	0	—	Not used
		1		
	1	0		
		1	TOC	PWM output

Figure 34 Timer Mode Register C2 (TMC2)

Timer mode register D2 (TMD2: $015)

Bit	3	2	1	0
Initial value	0	0	0	0
Read/Write	R/W	R/W	R/W	R/W
Bit name	TMD23	TMD22	TMD21	TMD20

TMD23	TMD22	TMD21	TMD20	$R1_2$/TOD mode selection	
0	0	0	0	$R1_2$	$R1_2$ port
			1	TOD	Toggle output
		1	0	TOD	0 output
			1	TOD	1 output
	1	0	0	—	Not used
			1		
		1	0		
			1	TOD	PWM output
1	×	×	×	$R1_2$	Input capture ($R1_2$ port)

× : Don't care

Figure 35 Timer Mode Register D2 (TMD2)

Serial mode register A (SMRA: $005)

Bit	3	2	1	0
Initial value	0	0	0	0
Read/Write	W	W	W	W
Bit name	SMRA3	SMRA2	SMRA1	SMRA0

SMRA3	$R2_1/\overline{SCK}$ mode selection
0	$R2_1$
1	$\overline{SCK}$

SMRA2	SMRA1	SMRA0	$\overline{SCK}$	Clock source	Prescaler division ratio
0	0	0	Output	Prescaler	÷2048
		1	Output	Prescaler	÷512
	1	0	Output	Prescaler	÷128
		1	Output	Prescaler	÷32
1	0	0	Output	Prescaler	÷8
		1	Output	Prescaler	÷2
	1	0	Output	System clock	—
		1	Input	External clock	—

Figure 36 Serial Mode Register A (SMRA)

Port mode register A (PMRA: $004)

Bit	3	2	1	0
Initial value	—	—	0	0
Read/Write	—	—	W	W
Bit name	Not used	Not used	PMRA1	PMRA0

PMRA1	$R2_2$/SI mode selection
0	$R2_2$
1	SI

PMRA0	$R2_3$/SO mode selection
0	$R2_3$
1	SO

Figure 37 Port Mode Register A (PMRA)

LCD output register 1 (LOR1: $01D)

Bit	3	2	1	0
Initial value	0	0	0	0
Read/Write	W	W	W	W
Bit name	LOR13	LOR12	LOR11	LOR10

LOR13	$R3_3$/SEG4 mode selection
0	$R3_3$
1	SEG4

LOR11	$R3_1$/SEG2 mode selection
0	$R3_1$
1	SEG2

LOR12	$R3_2$/SEG3 mode selection
0	$R3_2$
1	SEG3

LOR10	$R3_0$/SEG1 mode selection
0	$R3_0$
1	SEG1

Figure 38 LCD Output Register 1 (LOR1)

LCD output register 2 (LOR2: $01E)

Bit	3	2	1	0
Initial value	0	0	0	0
Read/Write	W	W	W	W
Bit name	LOR23	LOR22	LOR21	LOR20

LOR23	$R4_3$/SEG8 mode selection
0	$R4_3$
1	SEG8

LOR21	$R4_1$/SEG6 mode selection
0	$R4_1$
1	SEG6

LOR22	$R4_2$/SEG7 mode selection
0	$R4_2$
1	SEG7

LOR20	$R4_0$/SEG5 mode selection
0	$R4_0$
1	SEG5

Figure 39 LCD Output Register 2 (LAOR2)

LCD output register 3 (LOR3: $01F)

Bit	3	2	1	0
Initial value	—	0	0	0
Read/Write	—	W	W	W
Bit name	Not used	LOR32	LOR31	LOR30

LOR32	$R7_0$/SEG17–$R7_3$/SEG20 mode selection
0	$R7_0$–$R7_3$
1	SEG17–SEG20

LOR31	$R6_0$/SEG13–$R6_3$/SEG16 mode selection
0	$R6_0$–$R6_3$
1	SEG13–SEG16

LOR30	$R5_0$/SEG9–$R5_3$/SEG12 mode selection
0	$R5_0$–$R5_3$
1	SEG9–SEG12

Figure 40 LCD Output Register 3 (LOR3)

Pull-Up MOS Transistor Control: A program-controlled pull-up MOS transistor is provided for each input/output pin other than input-only pins D_{10} and D_{11}. The on/off status of all these transistors is controlled by bit 3 (MIS3) of the miscellaneous register (MIS: $00C), and the on/off status of an individual transistor can also be controlled by the port data register (PDR) of the corresponding pin—enabling on/off control of that pin alone (table 17 and figure 41).

The on/off status of each transistor and the peripheral function mode of each pin can be set independently.

How to Deal with Unused I/O Pins: I/O pins that are not needed by the user system (floating) must be connected to V_{CC} to prevent LSI malfunctions due to noise. These pins must either be pulled up to V_{CC} by their pull-up MOS transistors or by resistors of about 100 kΩ.

Miscellaneous register (MIS: $00C)

Bit	3	2	1	0
Initial value	0	0	0	0
Read/Write	W	W	W	W
Bit name	MIS3	MIS2	MIS1	MIS0

MIS3	Pull-up MOS on/off selection
0	Off
1	On

MIS2	CMOS buffer on/off selection for pin $R2_3$/SO
0	On
1	Off

MIS1	MIS0
t_{RC} selection. Refer to figure 18 in the operation modes section.	

Figure 41 Miscellaneous Register (MIS)

Prescalers

The MCU has the following two prescalers, S and W.

The prescalers operating conditions are listed in table 19, and the prescalers output supply is shown in figure 42. The timers A–D input clocks except external events, the serial transmit clock except the external clock, and the LCD circuit operating clock are selected from the prescaler outputs, depending on corresponding mode registers.

Prescaler Operation

Prescaler S: 11-bit counter that inputs the system clock signal. After being reset to $000 by MCU reset, prescaler S divides the system clock. Prescaler S keeps counting, except in watch and subactive modes and at MCU reset.

Prescaler W: Five-bit counter that inputs the X1 input clock signal (32-kHz crystal oscillation) divided by eight. After being reset to $00 by MCU reset, prescaler W divides the input clock. Prescaler W can be reset by software.

Table 19 Prescaler Operating Conditions

Prescaler	Input Clock	Reset Conditions	Stop Conditions
Prescaler S	System clock (in active and standby mode), Subsystem clock (in subactive mode)	MCU reset	MCU reset, stop mode, watch mode
Prescaler W	32-kHz crystal oscillation	MCU reset, software	MCU reset, stop mode

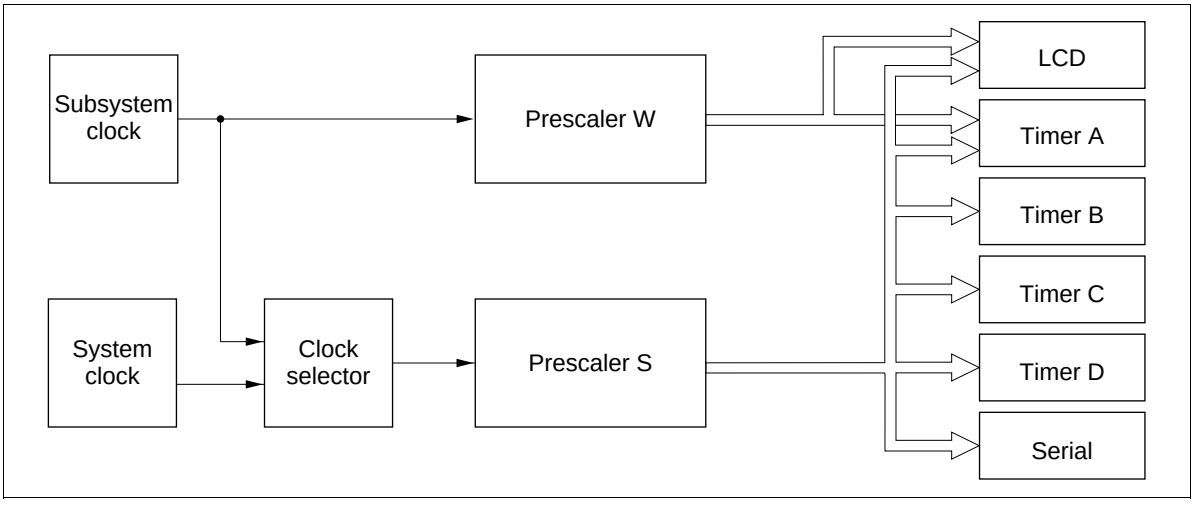

Figure 42 Prescaler Output Supply

Timers

The MCU has four timer/counters (A to D).

- Timer A: Free-running timer
- Timer B: Multifunction timer
- Timer C: Multifunction timer
- Timer D: Multifunction timer

Timer A is an 8-bit free-running timer. Timers B–D are 8-bit multifunction timers, whose functions are listed in table 20. The operating modes are selected by software.

Table 20 Timer Functions

Functions		Timer A	Timer B	Timer C	Timer D
Clock source	Prescaler S	Available	Available	Available	Available
	Prescaler W	Available	—	—	—
	External event	—	Available	—	Available
Timer functions	Free-running	Available	Available	Available	Available
	Time-base	Available	—	—	—
	Event counter	—	Available	—	Available
	Reload	—	Available	Available	Available
	Watchdog	—	—	Available	—
	Input capture	—	—	—	Available
Timer outputs	Toggle	—	Available	Available	Available
	0 output	—	Available	Available	Available
	1 output	—	Available	Available	Available
	PWM	—	—	Available	Available

Note: — implies not available.

Timer A

Timer A Functions: Timer A has the following functions.

- Free-running timer
- Clock time-base

The block diagram of timer A is shown in figure 43.

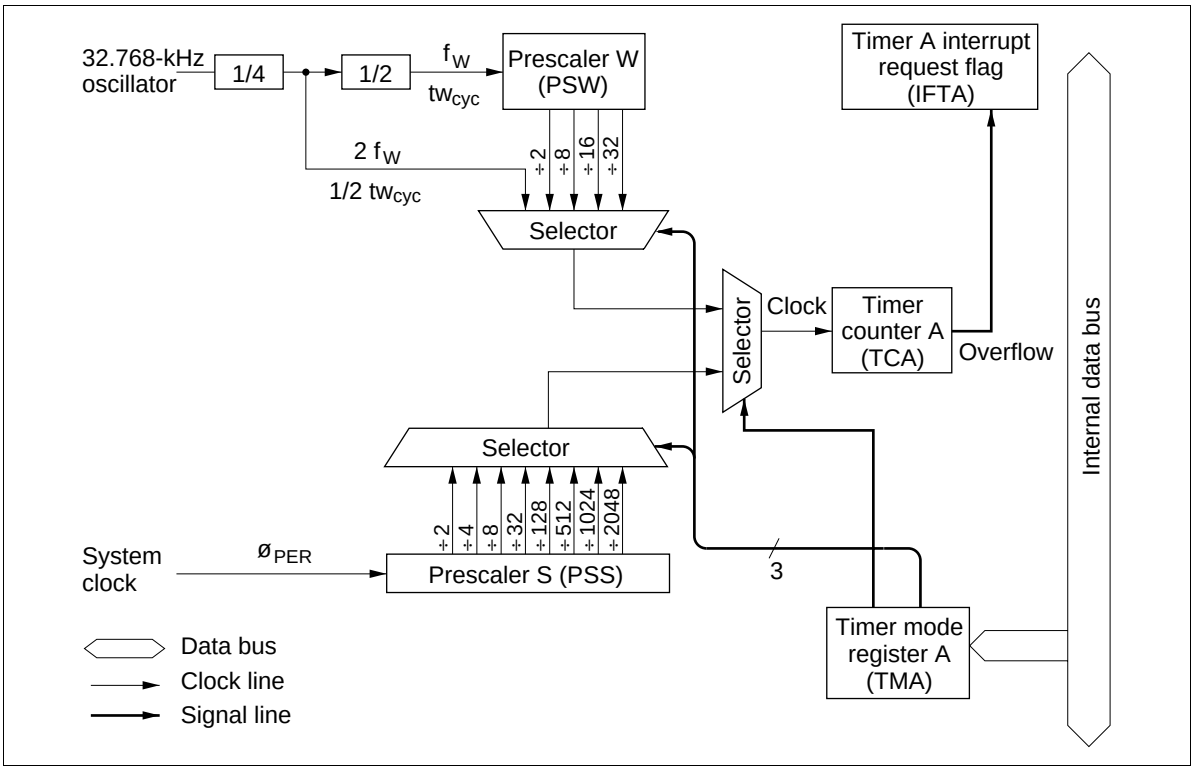

Figure 43 Block Diagram of Timer A

Timer A Operations:

- Free-running timer operation: The input clock for timer A is selected by timer mode register A (TMA: $008).
- Timer A is reset to $00 by MCU reset and

  incremented at each input clock. If an input clock is applied to timer A after it has reached
- $FF, an overflow is generated, and timer A is reset to $00. The overflow sets the timer A interrupt request flag (IFTA: $001, bit 2). Timer A continues to be incremented after reset to $00, and therefore it generates regular interrupts every 256 clocks.
- Clock time-base operation: Timer A is used as a clock time-base by setting bit 3 (TMA3) of timer mode register A (TMA: $008) to 1. The prescaler W output is applied to timer A, and timer A generates interrupts at the correct timing based on the 32.768-kHz crystal oscillation. In this case, prescaler W and timer A can be reset to $00 by software.

Registers for Timer A Operation: Timer A operating modes are set by the following registers.

- Timer mode register A (TMA: $008): Four-bit write-only register that selects timer A's operating mode and input clock source as shown in figure 44.

Timer mode register A (TMA: $008)

Bit	3	2	1	0
Initial value	0	0	0	0
Read/Write	W	W	W	W
Bit name	TMA3	TMA2	TMA1	TMA0

TMA3	TMA2	TMA1	TMA0	Source prescaler	Input clock frequency	Operating mode
0	0	0	0	PSS	$2048t_{cyc}$	Timer A mode
			1	PSS	$1024t_{cyc}$	
		1	0	PSS	$512t_{cyc}$	
			1	PSS	$128t_{cyc}$	
	1	0	0	PSS	$32t_{cyc}$	
			1	PSS	$8t_{cyc}$	
		1	0	PSS	$4t_{cyc}$	
			1	PSS	$2t_{cyc}$	
1	0	0	0	PSW	$32t_{Wcyc}$	Time-base mode
			1	PSW	$16t_{Wcyc}$	
		1	0	PSW	$8t_{Wcyc}$	
			1	PSW	$2t_{Wcyc}$	
	1	0	0	—	$1/2t_{Wcyc}$	
			1	—	Not used	
		1	×	—	Reset PSW and TCA	

× : Don't care

Note: 1. t_{Wcyc} = 244.14 µs (when a 32.768-kHz crystal oscillator is used)
2. Timer counter overflow output period (seconds) = input clock period (seconds) × 256.
3. If PSW of TCA reset is selected while the LCD is operating, LCD operation halts (power switch goes off and all SEG and COM pins are grounded).
When an LCD is connected for display, the PSW and TCA reset periods must be set in the program to the minimum.
4. The division ratio must not be modified during time-base mode operation, otherwise an overflow cycle error will occur.

Figure 44 Timer Mode Register A (TMA)

Timer B

Timer B Functions: Timer B has the following functions.

- Free-running/reload timer
- External event counter
- Timer output operation (toggle, 0, and 1 outputs)

The block diagram of timer B is shown in figure 45.

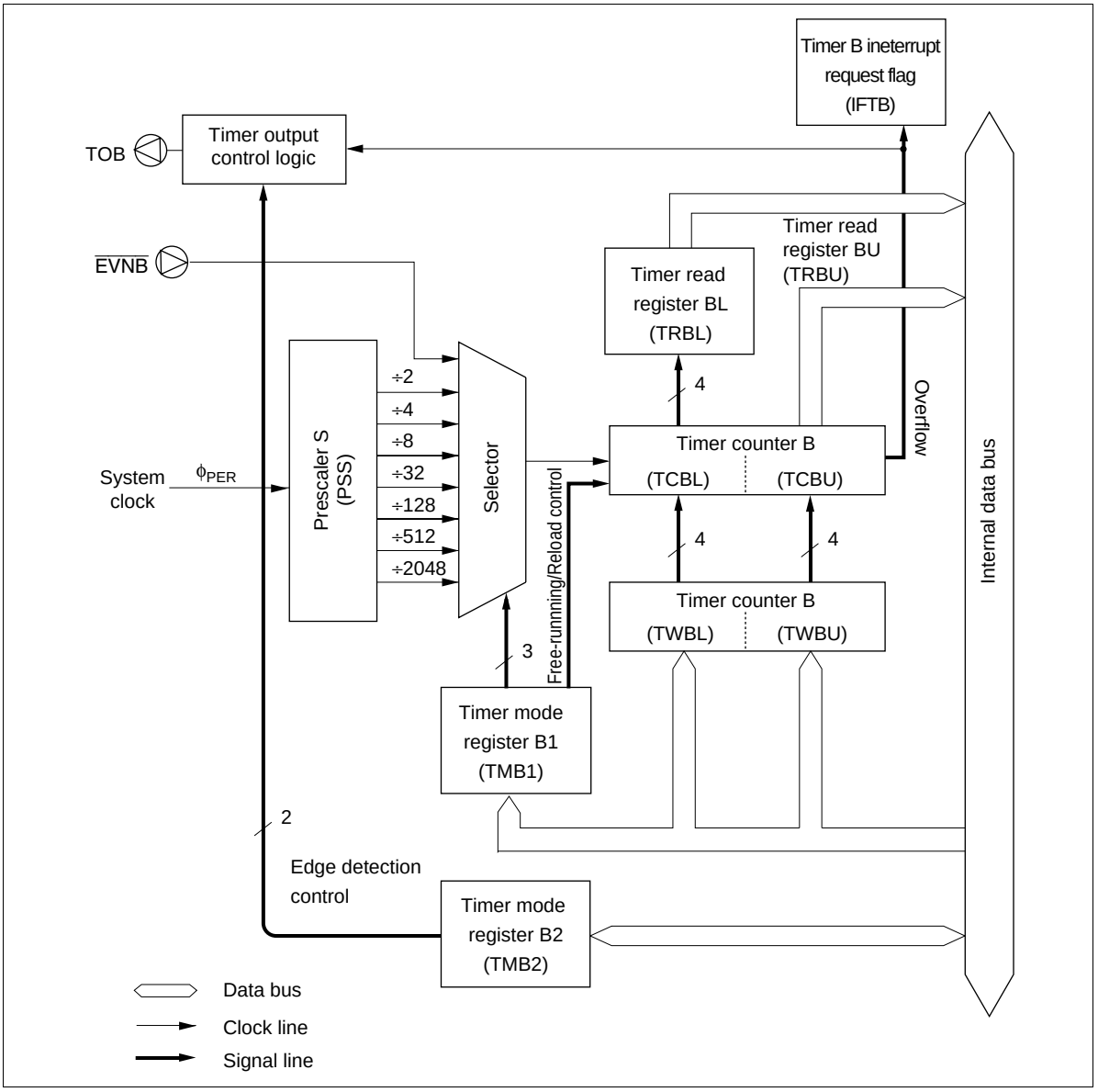

Figure 45 Block Diagram of Timer B

Timer B Operations:

- Free-running/reload timer operation: The free-running/reload operation, input clock source, and prescaler division ratio are selected by timer mode register B1 (TMB1: $009).

  Timer B is initialized to the value set in timer write register B (TWBL: $00A, TWBU: $00B) by software and incremented by one at each clock input. If an input clock is applied to timer B after it has reached $FF, an overflow is generated. In this case, if the reload timer function is enabled, timer B is initialized to its initial value set in timer write register B; if the free-running timer function is enabled, the timer is initialized to $00 and then incremented again.

  The overflow sets the timer B interrupt request flag (IFTB: $002, bit 0). IFTB is reset by software or MCU reset. Refer to figure 3 and table 1 for details.

- External event counter operation: Timer B is used as an external event counter by selecting external event input as input clock source. In this case, pin $R1_3/\overline{EVNB}$ must be set to $\overline{EVNB}$ by port mode register C (PMRC: $025).

  Timer B is incremented by one at each falling edge of signals input to pin $\overline{EVNB}$. The other operation is basically the same as the free-running/reload timer operation.

- Timer output operation: The following three output modes can be selected for timer B by setting timer mode register B2 (TMB2: $013).

  Toggle
  0 output
  1 output

  By selecting the timer output mode, pin $R1_0$/TOB is set to TOB. The output from TOB is reset low by MCU reset.

  — Toggle output: When toggle output mode is selected, the output level is inverted if a clock is input after timer B has reached $FF. By using this function and reload timer function, clock signals can be output at a required frequency for the buzzer. The output waveform is shown in figure 46.

  — 0 output: When 0 output mode is selected, the output level is pulled low if a clock is input after timer B has reached $FF. Note that this function must be used only when the output level is high.

  — 1 output: When 1 output mode is selected, the output level is set high if a clock is input after timer B has reached $FF. Note that this function must be used only when the output level is low.

Toggle output waveform (timers B, C, and D)

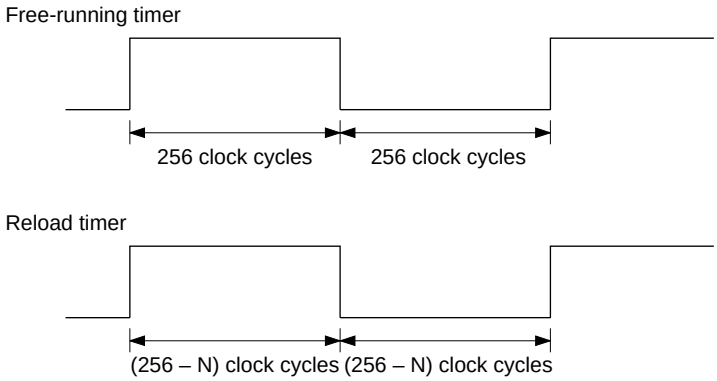

PWM output waveform (timers C and D)

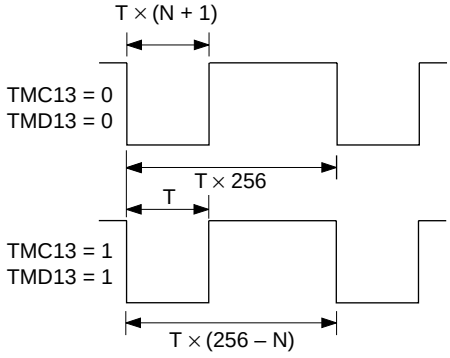

Note: The waveform is always fixed low when N = $FF.
T: Input clock period to counter (figures 52 and 60)
N: The value of the timer write register

Figure 46 Timer Output Waveform

Registers for Timer B Operation: By using the following registers, timer B operation modes are selected and the timer B count is read and written.

Timer mode register B1 (TMB1: $009)
Timer mode register B2 (TMB2: $013)
Timer write register B (TWBL: $00A, TWBU: $00B)
Timer read register B (TRBL: $00A, TRBU: $00B)
Port mode register C (PMRC: $025)

- Timer mode register B1 (TMB1: $009):

  Four-bit write-only register that selects the free-running/reload timer function, input clock source, and the prescaler division ratio as shown in figure 47. It is reset to $0 by MCU reset.

  Writing to this register is valid from the second instruction execution cycle after the execution of the previous timer mode register B1 write instruction. Setting timer B's initialization by writing to timer write register B (TWBL: $00A, TWBU: $00B) must be done after a mode change becomes valid.

Timer mode register B1 (TMB1: $009)

Bit	3	2	1	0
Initial value	0	0	0	0
Read/Write	W	W	W	W
Bit name	TMB13	TMB12	TMB11	TMB10

TMB13	Free-running/reload timer selection
0	Free-running timer
1	Reload timer

TMB12	TMB11	TMB10	Input clock period and input clock source
0	0	0	$2048t_{cyc}$
		1	$512t_{cyc}$
	1	0	$128t_{cyc}$
		1	$32t_{cyc}$
1	0	0	$8t_{cyc}$
		1	$4t_{cyc}$
	1	0	$2t_{cyc}$
		1	$R1_3/\overline{EVNB}$ (external event input)

Figure 47 Timer Mode Register B1 (TMB1)

Timer mode register B2 (TMB2: $013)

Bit	3	2	1	0
Initial value	—	—	0	0
Read/Write	—	—	R/W	R/W
Bit name	Not used	Not used	TMB21	TMB20

TMB21	TMB20	$R1_0$/TOB mode selection	
0	0	$R1_0$	$R1_0$ port
	1	TOB	Toggle output
1	0	TOB	0 output
	1	TOB	1 output

Figure 48 Timer Mode Register B2 (TMB2)

- Timer mode register B2 (TMB2: $013): Two-bit read/write register that selects the timer B output mode as shown in figure 48. It is reset to $0 by MCU reset.

- Timer write register B (TWBL: $00A, TWBU: $00B): Write-only register consisting of the lower digit (TWBL) and the upper digit (TWBU) as shown in figures 49 and 50. The lower digit is reset to $0 by MCU reset, but the upper digit value is invalid.

  Timer B is initialized by writing to timer write register B. In this case, the lower digit (TWBL) must be written to first, but writing only to the lower digit does not change the timer B value. Timer B is initialized to the value in timer write register B at the same time the upper digit (TWBU) is written to. When timer write register B is written to again and if the lower digit value needs no change, writing only to the upper digit initializes timer B.

Timer write register B (lower digit) (TWBL: $00A)

Bit	3	2	1	0
Initial value	0	0	0	0
Read/Write	W	W	W	W
Bit name	TWBL3	TWBL2	TWBL1	TWBL0

Figure 49 Timer Write Register B Lower Digit (TWBL)

Timer write register B (upper digit) (TWBU: $00B)

Bit	3	2	1	0
Initial value	Undefined	Undefined	Undefined	Undefined
Read/Write	W	W	W	W
Bit name	TWBU3	TWBU2	TWBU1	TWBU0

Figure 50 Timer Write Register B Upper Digit (TWBU)

- Timer read register B (TRBL: $00A, TRBU: $00B): Read-only register consisting of the lower digit (TRBL) and the upper digit (TRBU) that holds the count of the timer B upper digit (figures 51 and 52).

  The upper digit (TRBU) must be read first. At this time, the count of the timer B upper digit is obtained, and the count of the timer B lower digit is latched to the lower digit (TRBL). After this, by reading TRBL, the count of timer B when TRBU is read can be obtained.

Timer read register B (lower digit) (TRBL: $00A)

Bit	3	2	1	0
Initial value	Undefined	Undefined	Undefined	Undefined
Read/Write	R	R	R	R
Bit name	TRBL3	TRBL2	TRBL1	TRBL0

Figure 51 Timer Read Register B Lower Digit (TRBL)

Timer read register B (upper digit) (TRBU: $00B)

Bit	3	2	1	0
Initial value	Undefined	Undefined	Undefined	Undefined
Read/Write	R	R	R	R
Bit name	TRBU3	TRBU2	TRBU1	TRBU0

Figure 52 Timer Read Register B Upper Digit (TRBU)

- Port mode register C (PMRC: $025): Write-only register that selects $R1_3/\overline{EVNB}$ pin function as shown in figure 53. It is reset to $0 by MCU reset.

Port mode register C (PMRC: $025)

Bit	3	2	1	0
Initial value	0	0	0	0
Read/Write	W	W	W	W
Bit name	PMRC3	PMRC2	PMRC1	PMRC0

PMRC3	$D_{11}/\overline{INT_0}$ mode selection
0	D_{11}
1	$\overline{INT_0}$

PMRC1	$R2_0$/EVND mode selection
0	$R2_0$
1	EVND

PMRC2	$D_{10}/\overline{STOPC}$ mode selection
0	D_{10}
1	$\overline{STOPC}$

PMRC0	$R1_3/\overline{EVNB}$ mode selection
0	$R1_3$
1	$\overline{EVNB}$

Figure 53 Port Mode Register C (PMRC)

Timer C

Timer C Functions: Timer C has the following functions.

- Free-running/reload timer
- Watchdog timer
- Timer output operation (toggle, 0, 1, and PWM outputs)

The block diagram of timer C is shown in figure 54.

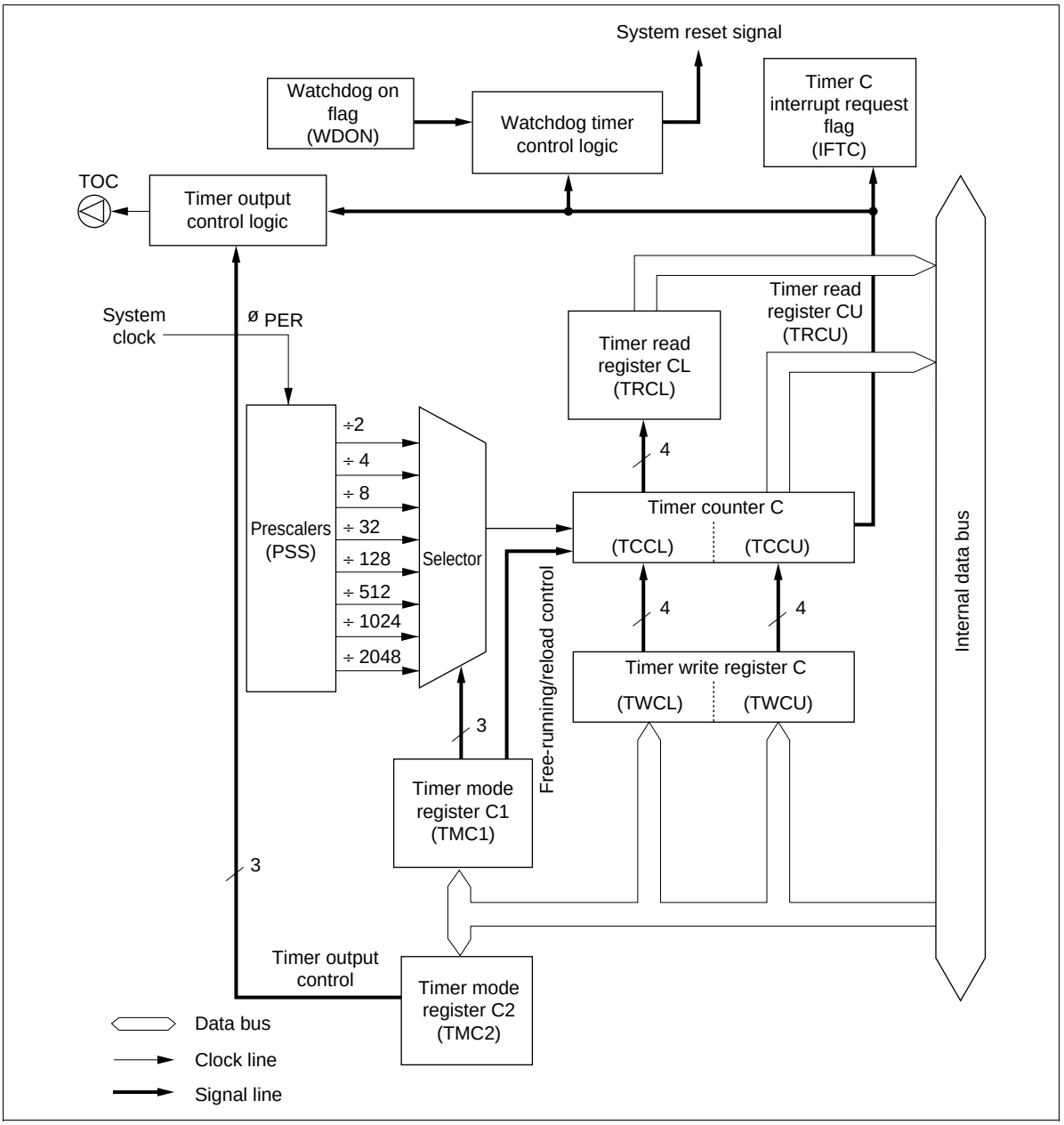

Figure 54 Block Diagram of Timer C

Timer C Operations:

- Free-running/reload timer operation: The free-running/reload operation, input clock source, and prescaler division ratio are selected by timer mode register C1 (TMC1: $00D).

  Timer C is initialized to the value set in timer write register C (TWCL: $00E, TWCU: $00F) by software and incremented by one at each clock input. If an input clock is applied to timer C after it has reached $FF, an overflow is generated. In this case, if the reload timer function is enabled, timer C is initialized to its initial value set in timer write register C; if the free-running timer function is enabled, the timer is initialized to $00 and then incremented again.

  The overflow sets the timer C interrupt request flag (IFTC: $002, bit 2). IFTC is reset by software or MCU reset. Refer to figure 3 and table 1 for details.

- Watchdog timer operation: Timer C is used as a watchdog timer for detecting out-of-control program routines by setting the watchdog on flag (WDON: $020, bit 1) to 1. If a program routine runs out of control and an overflow is generated, the MCU is reset. Program run can be controlled by initializing timer C by software before it reaches $FF.

- Timer output operation: The following four output modes can be selected for timer C by setting timer mode register C2 (TMC2: $014).

  Toggle
  0 output
  1 output
  PWM output

  By selecting the timer output mode, pin $R1_1$/TOC is set to TOC. The output from TOC is reset low by MCU reset.

  — Toggle output: The operation is basically the same as that of timer-B's toggle output.

  — 0 output: The operation is basically the same as that of timer-B's 0 output.

  — 1 output: The operation is basically the same as that of timer-B's 1 output.

  — PWM output: When PWM output mode is selected, timer C provides the variable-duty pulse output function. The output waveform differs depending on the contents of timer mode register C1 (TMC1: $00D) and timer write register C (TWCL: $00E, TWCU: $00F). The output waveform is shown in figure 46.

Registers for Timer C Operation: By using the following registers, timer C operation modes are selected and the timer C count is read and written.

Timer mode register C1 (TMC1: $00D)
Timer mode register C2 (TMC2: $014)
Timer write register C (TWCL: $00E, TWCU: $00F)
Timer read register C (TRCL: $00E, TRCU: $00F)

- Timer mode register C1 (TMC1: $00D): Four-bit write-only register that selects the free-running/reload timer function, input clock source, and the prescaler division ratio as shown in figure 55. It is reset to $0 by MCU reset.

  Writing to this register is valid from the second instruction execution cycle after the execution of the previous timer mode register C1 write instruction. Setting timer C's initialization by writing to timer write register C (TWCL: $00E, TWCU: $00F) must be done after a mode change becomes valid.

Timer mode register C1 (TMC1: $00D)

Bit	3	2	1	0
Initial value	0	0	0	0
Read/Write	W	W	W	W
Bit name	TMC13	TMC12	TMC11	TMC10

TMC13	Free-running/reload timer selection
0	Free-running timer
1	Reload timer

TMC12	TMC11	TMC10	Input clock period
0	0	0	$2048t_{cyc}$
		1	$1024t_{cyc}$
	1	0	$512t_{cyc}$
		1	$128t_{cyc}$
1	0	0	$32t_{cyc}$
		1	$8t_{cyc}$
	1	0	$4t_{cyc}$
		1	$2t_{cyc}$

Figure 55 Timer Mode Register C1 (TMC1)

- Timer mode register C2 (TMC2: $014): Three-bit read/write register that selects the timer C output mode as shown in figure 56. It is reset to $0 by MCU reset.

- Timer write register C (TWCL: $00E, TWCU: $00F): Write-only register consisting of the lower digit (TWCL) and the upper digit (TWCU). The operation of timer write register C is basically the same as that of timer write register B (TWBL: $00A, TWBU: $00B).

- Timer read register C (TRCL: $00E, TRCU: $00F): Read-only register consisting of the lower digit (TRCL) and the upper digit (TRCU) that holds the count of the timer C upper digit. The operation of timer read register C is basically the same as that of timer read register B (TRBL: $00A, TRBU: $00B).

Timer mode register C2 (TMC2: $014)

Bit	3	2	1	0
Initial value	—	0	0	0
Read/Write	—	R/W	R/W	R/W
Bit name	Not used	TMC22	TMC21	TMC20

TMC22	TMC21	TMC20	$R1_1$/TOC mode selection	
0	0	0	$R1_1$	$R1_1$ port
		1	TOC	Toggle output
	1	0	TOC	0 output
		1	TOC	1 output
1	0	0	—	Not used
		1		
	1	0		
		1	TOC	PWM output

Figure 56 Timer Mode Register C2 (TMC2)

Timer write register C (lower digit) (TWCL: $00E)

Bit	3	2	1	0
Initial value	0	0	0	0
Read/Write	W	W	W	W
Bit name	TWCL3	TWCL2	TWCL1	TWCL0

Figure 57 Timer Write Register C Lower Digit (TWCL)

Timer write register C (upper digit) (TWCU: $00F)

Bit	3	2	1	0
Initial value	Undefined	Undefined	Undefined	Undefined
Read/Write	W	W	W	W
Bit name	TWCU3	TWCU2	TWCU1	TWCU0

Figure 58 Timer Write Register C Upper Digit (TWCU)

Timer read register C (lower digit) (TRCL: $00E)

Bit	3	2	1	0
Initial value	Undefined	Undefined	Undefined	Undefined
Read/Write	R	R	R	R
Bit name	TRCL3	TRCL2	TRCL1	TRCL0

Figure 59 Timer Read Register C Lower Digit (TRCL)

Timer read register C (upper digit) (TRCU: $00F)

Bit	3	2	1	0
Initial value	Undefined	Undefined	Undefined	Undefined
Read/Write	R	R	R	R
Bit name	TRCU3	TRCU2	TRCU1	TRCU0

Figure 60 Timer Read Register C Upper Digit (TRCU)

Timer D

Timer D Functions: Timer D has the following functions.

- Free-running/reload timer
- External event counter
- Timer output operation (toggle, 0, 1, and PWM outputs)
- Input capture timer

The block diagram for each operation mode of timer D is shown in figures 61 and 62.

Timer D Operations:

- Free-running/reload timer operation: The free-running/reload operation, input clock source, and prescaler division ratio are selected by timer mode register D1 (TMD1: $010).

  Timer D is initialized to the value set in timer write register D (TWDL: $011, TWDU: $012) by software and incremented by one at each clock input. If an input clock is applied to timer D after it has reached $FF, an overflow is generated. In this case, if the reload timer function is enabled, timer D is initialized to its initial value set in timer write register D; if the free-running timer function is enabled, the timer is initialized to $00 and then incremented again.

  The overflow sets the timer D interrupt request flag (IFTD: $003, bit 0). IFTD is reset by software or MCU reset. Refer to figure 3 and table 1 for details.

- External event counter operation: Timer D is used as an external event counter by selecting the external event input as an input clock source. In this case, pin $R2_0$/EVND must be set to EVND by port mode register C (PMRC: $025).

  Either falling or rising edge, or both falling and rising edges of input signals can be selected as the external event detection edge by detection edge select register 2 (ESR2: $027). When both rising and falling edges detection is selected, the time between the falling edge and rising edge of input signals must be $2t_{cyc}$ or longer.

  Timer D is incremented by one at each detection edge selected by detection edge select register 2 (ESR2: $027). The other operation is basically the same as the free-running/reload timer operation.

- Timer output operation: The following four output modes can be selected for timer D by setting timer mode register D2 (TMD2: $015).

  Toggle
  0 output
  1 output
  PWM output

  By selecting the timer output mode, pin $R1_2$/TOD is set to TOD. The output from TOD is reset low by MCU reset.

  — Toggle output: The operation is basically the same as that of timer-B's toggle output.

  — 0 output: The operation is basically the same as that of timer-B's 0 output.

  — 1 output: The operation is basically the same as that of timer-B's 1 output.

  — PWM output: The operation is basically the same as that of timer-C's PWM output.

- Input capture timer operation: The input capture timer counts the clock cycles between trigger edges input to pin EVND.

  Either falling or rising edge, or both falling and rising edges of input signals can be selected as the trigger input edge by detection edge select register 2 (ESR2: $027).

  When a trigger edge is input to EVND, the count of timer D is written to timer read register D (TRDL: $011, TRDU: $012), and the timer D interrupt request flag (IFTD: $003, bit 0) and the input capture status flag (ICSF: $021, bit 0) are set. Timer D is reset to $00, and then incremented again. While ICSF is set, if a trigger input edge is applied to timer D, or if timer D generates an overflow, the input capture error flag (ICEF: $021, bit 1) is set. ICSF and ICEF are reset to 0 by MCU reset or by writing 0.

  By selecting the input capture operation, pin $R1_2$/TOD is set to $R1_2$ and timer D is reset to $00.

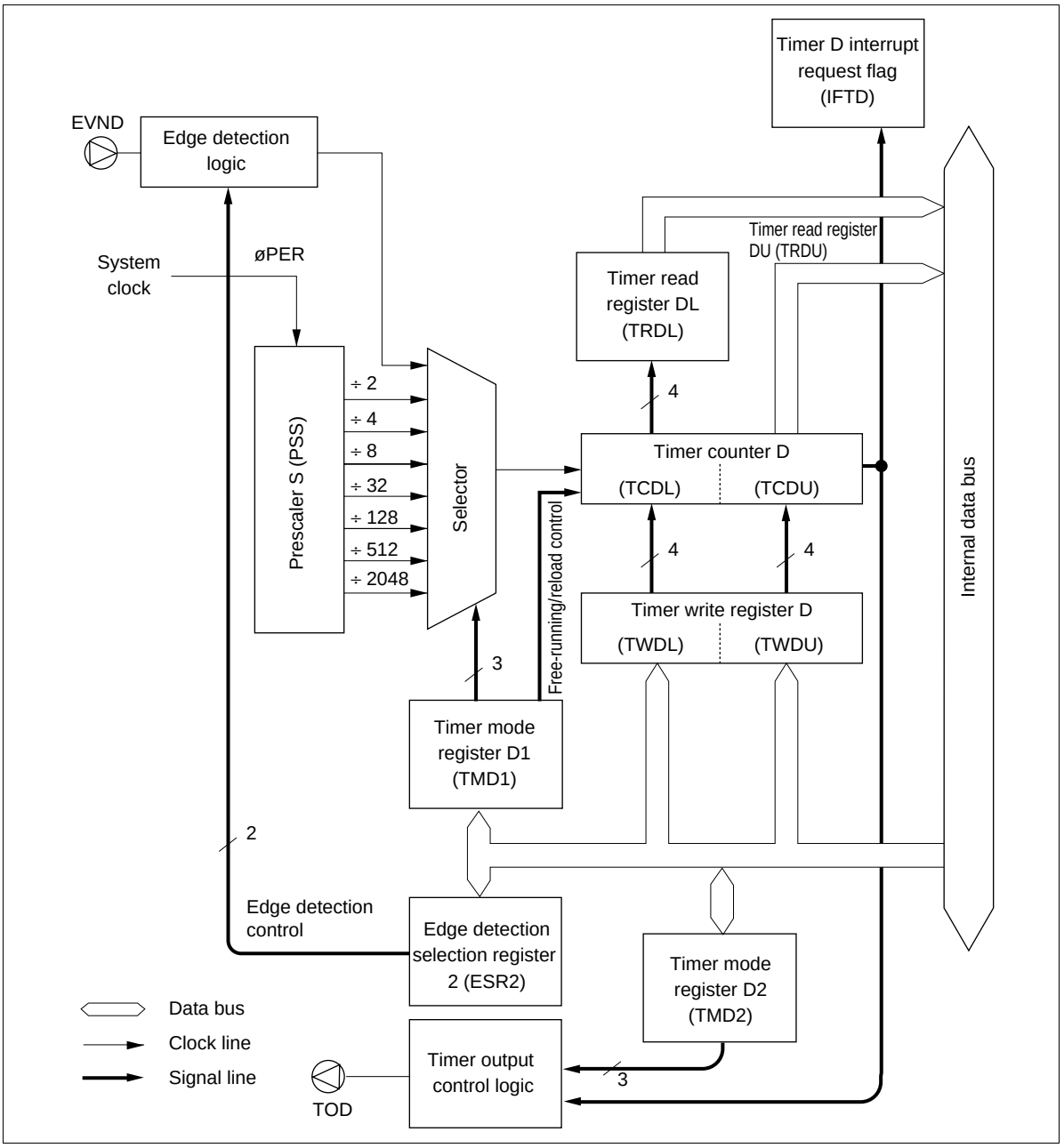

Figure 61 Block Diagram of Timer D (Free-Running/Reload Timer)

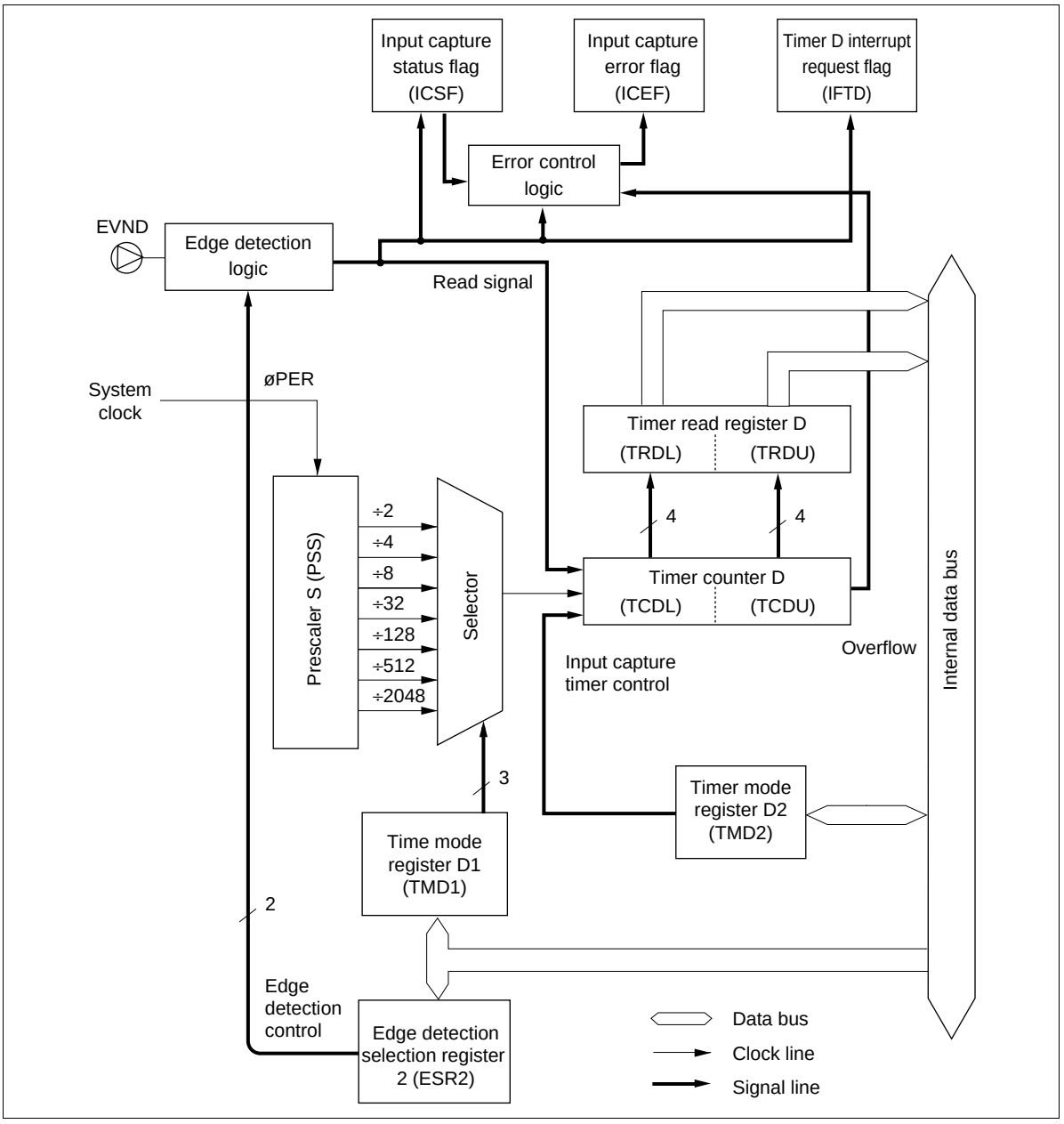

Figure 62 Block Diagram of Timer D (Input Capture Timer)

Registers for Timer D Operation: By using the following registers, timer D operation modes are selected and the timer D count is read and written.

Timer mode register D1 (TMD1: $010)
Timer mode register D2 (TMD2: $015)
Timer write register D (TWDL: $011, TWDU: $012)
Timer read register D (TRDL: $011, TRDU: $012)
Port mode register C (PMRC: $025)
Detection edge select register 2 (ESR2: $027)

- Timer mode register D1 (TMD1: $010): Four-bit write-only register that selects the free-running/reload timer function, input clock source, and the prescaler division ratio as shown in figure 63. It is reset to $0 by MCU reset.

  Writing to this register is valid from the second instruction execution cycle after the execution of the previous timer mode register D1 (TMD1: $010) write instruction. Setting timer D's initialization by writing to timer write register D (TWDL: $011, TWDU: $012) must be done after a mode change becomes valid.

  When selecting the input capture timer operation, select the internal clock as the input clock source.

Timer mode register D1 (TMD1: $010)

Bit	3	2	1	0
Initial value	0	0	0	0
Read/Write	W	W	W	W
Bit name	TMD13	TMD12	TMD11	TMD10

TMD13	Free-running/reload timer selection
0	Free-running timer
1	Reload timer

TMD12	TMD11	TMD10	Input clock period and input clock source
0	0	0	$2048t_{cyc}$
		1	$512t_{cyc}$
	1	0	$128t_{cyc}$
		1	$32t_{cyc}$
1	0	0	$8t_{cyc}$
		1	$4t_{cyc}$
	1	0	$2t_{cyc}$
		1	$R2_0$/EVND (external event input)

Figure 63 Timer Mode Register D1 (TMD1)

- Timer mode register D2 (TMD2: $015): Four-bit read/write register that selects the timer D output mode and input capture operation as shown in figure 64. It is reset to $0 by MCU reset.

- Timer write register D (TWDL: $011, TWDU: $012): Write-only register consisting of the lower digit (TWDL) and the upper digit (TWDU). The operation of timer write register D is basically the same as that of timer write register B (TWBL: $00A, TWBU: $00B).

- Timer read register D (TRDL: $011, TRDU: $012): Read-only register consisting of the lower digit (TRDL) and the upper digit (TRDU). The operation of timer read register D is basically the same as that of timer read register B (TRBL: $00A, TRBU: $00B).

  When the input capture timer operation is selected and if the count of timer D is read after a trigger is input, either the lower or upper digit can be read first.

- Port mode register C (PMRC: $025): Write-only register that selects $R2_0$/EVND pin function as shown in figure 53. It is reset to $0 by MCU reset.

- Detection edge select register 2 (ESR2: $027): Write-only register that selects the detection edge of signals input to pin EVND as shown in figure 69. It is reset to $0 by MCU reset.

Timer mode register D2 (TMD2: $015)

Bit	3	2	1	0
Initial value	0	0	0	0
Read/Write	R/W	R/W	R/W	R/W
Bit name	TMD23	TMD22	TMD21	TMD20

TMD23	TMD22	TMD21	TMD20	$R1_2$/TOD mode selection	
0	0	0	0	$R1_2$	$R1_2$ port
			1	TOD	Toggle output
		1	0	TOD	0 output
			1	TOD	1 output
	1	0	0	—	Not used
			1		
		1	0		
			1	TOD	PWM output
1	×	×	×	$R1_2$	Input capture ($R1_2$ port)

× : Don't care

Figure 64 Timer Mode Register D2 (TMD2)

Timer write register D (lower digit) (TWDL: $011)

Bit	3	2	1	0
Initial value	0	0	0	0
Read/Write	W	W	W	W
Bit name	TWDL3	TWDL2	TWDL1	TWDL0

Figure 65 Timer Write Register D Lower Digit (TWDL)

Timer write register D (upper digit) (TWDU: $012)

Bit	3	2	1	0
Initial value	Undefined	Undefined	Undefined	Undefined
Read/Write	W	W	W	W
Bit name	TWDU3	TWDU2	TWDU1	TWDU0

Figure 66 Timer Write Register D Upper Digit (TWDU)

Timer read register D (lower digit) (TRDL: $011)

Bit	3	2	1	0
Initial value	Undefined	Undefined	Undefined	Undefined
Read/Write	R	R	R	R
Bit name	TRDL3	TRDL2	TRDL1	TRDL0

Figure 67 Timer Read Register D Lower Digit (TRDL)

Timer read register D (upper digit) (TRDU: $012)

Bit	3	2	1	0
Initial value	Undefined	Undefined	Undefined	Undefined
Read/Write	R	R	R	R
Bit name	TRDU3	TRDU2	TRDU1	TRDU0

Figure 68 Timer Read Register D Upper Digit (TRDU)

Detection edge register 2 (ESR2: $027)

Bit	3	2	1	0
Initial value	0	0	0	0
Read/Write	W	W	W	W
Bit name	ESR23	ESR22	ESR21	ESR20

ESR23	ESR22	EVND detection edge
0	0	No detection
	1	Falling-edge detection
1	0	Rising-edge detection
	1	Double-edge detection*

ESR21	ESR20	INT_4 detection edge
0	0	No detection
	1	Falling-edge detection
1	0	Rising-edge detection
	1	Double-edge detection*

Note: * Both falling and rising edges are detected.

Figure 69 Detection Edge Select Register 2 (ESR2)

Note on Use

When using the timer output as PWM output, note the following point. From the update of the timer write register untill the occurrence of the overflow interrupt, the PWM output differs from the period and duty settings, as shown in table 21. The PWM output should therefore not be used until after the overflow interrupt following the update of the timer write register. After the overflow, the PWM output will have the set period and duty cycle.

Table 21 PWM Output Following Update of Timer Write Register

	PWM Output	
Mode	**Timer Write Register is Updated during High PWM Output**	**Timer Write Register is Updated during Low PWM Output**
Free running	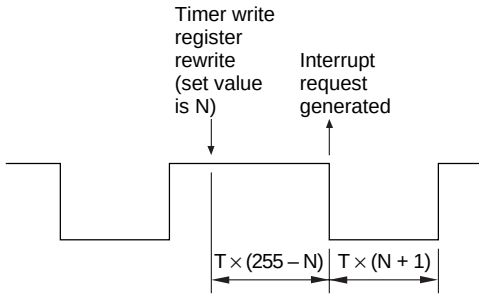	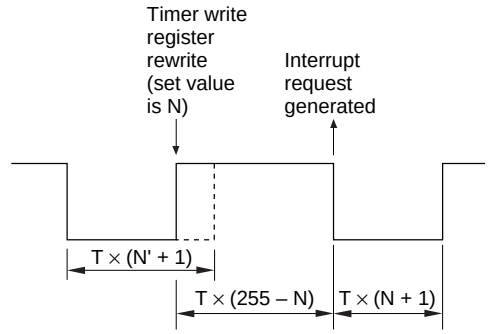
Reload	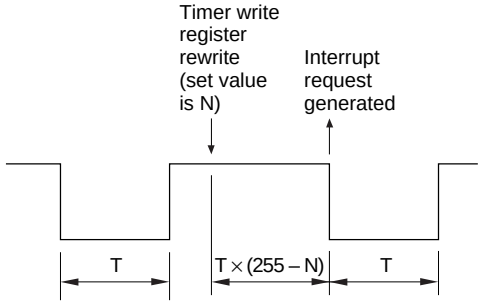	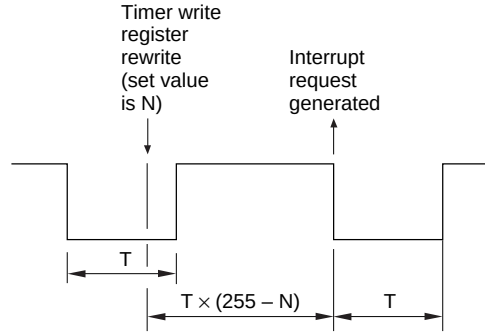

Serial Interface

The serial interface serially transfers and receives 8-bit data, and includes the following features.

- Multiple transmit clock sources
  - External clock
  - Internal prescaler output clock
  - System clock
- Output level control in idle states

Five registers, an octal counter, and a multiplexer are also configured for the serial interface as follows.

Serial data register (SRL: $006, SRU: $007)
Serial mode register A (SMRA: $005)
Serial mode register B (SMRB: $028)
Miscellaneous register (MIS: $00C)
Octal counter (OC)
Selector

The block diagram of the serial interface is shown in figure 70.

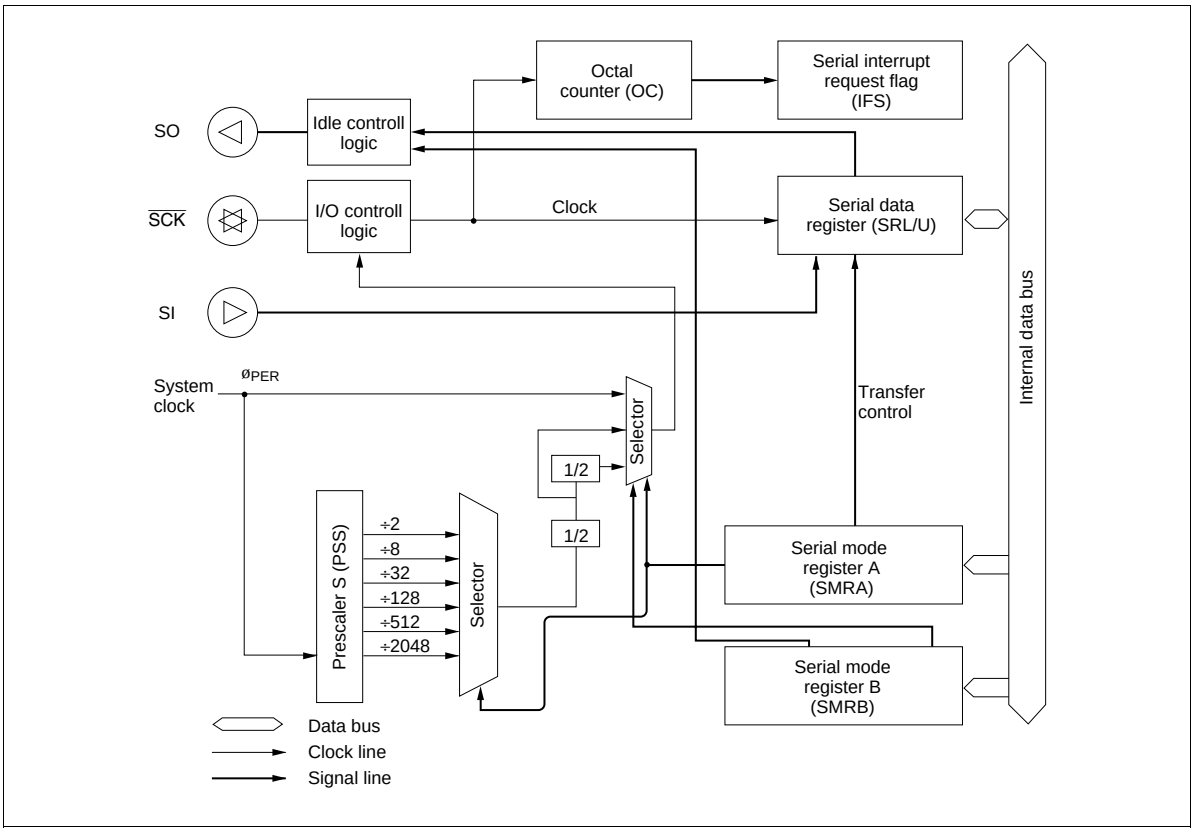

Figure 70 Block Diagram of Serial Interface

Serial Interface Operation

Selecting and Changing the Operating Mode: table 22 lists the serial interface's operating modes. To select an operating mode, use one of these combinations of port mode register A (PMRA: $004) and serial mode register A (SMRA: $005) settings; to change the operating mode, always initialize the serial interface internally by writing data to serial mode register A. Note that the serial interface is initialized by writing data to serial mode register A. Refer to the following Serial Mode Register A section for details.

Pin Setting: The $R2_1/\overline{SCK}$ pin is controlled by writing data to serial mode register A (SMRA: $005). The $R2_2$/SI and $R2_3$/SO pins are controlled by writing data to port mode register A (PMRA: $004). Refer to the following Registers for Serial Interface section for details.

Transmit Clock Source Setting: The transmit clock source is set by writing data to serial mode register A (SMRA: $005) and serial mode register B (SMRB: $028). Refer to the following Registers for Serial Interface section for details.

Data Setting: Transmit data is set by writing data to the serial data register (SRL: $006, SRU: $007). Receive data is obtained by reading the contents of the serial data register. The serial data is shifted by the transmit clock and is input from or output to an external system.

The output level of the SO pin is invalid until the first data is output after MCU reset, or until the output level control in idle states is performed.

Table 22 Serial Interface Operating Modes

SMRA	PMRA		
Bit 3	Bit 1	Bit 0	Operating Mode
1	0	0	Continuous clock output mode
		1	Transmit mode
	1	0	Receive mode
		1	Transmit/receive mode

Transfer Control: The serial interface is activated by the STS instruction. The octal counter is reset to 000 by this instruction, and it increments at the rising edge of the transmit clock. When the eighth transmit clock signal is input or when serial transmission/receive is discontinued, the octal counter is reset to 000, the serial interrupt request flag (IFS: $023, bit 2) is set, and the transfer stops.

When the prescaler output is selected as the transmit clock, the transmit clock frequency is selected as $4t_{cyc}$ to $8192t_{cyc}$ by setting bits 2 to 0 (SMRA2– SMRA0) of serial mode register A (SMRA: $005) and bit 0 (SMRB0) of serial mode register B (SMRB: $028) as listed in table 23.

Table 23 Serial Transmit Clock (Prescaler Output)

SMRB		SMRA			
Bit 0	Bit 2	Bit 1	Bit 0	Prescaler Division Ratio	Transmit Clock Frequency
0	0	0	0	÷ 2048	$4096t_{cyc}$
			1	÷ 512	$1024t_{cyc}$
		1	0	÷ 128	$256t_{cyc}$
			1	÷ 32	$64t_{cyc}$
	1	0	0	÷ 8	$16t_{cyc}$
			1	÷ 2	$4t_{cyc}$
1	0	0	0	÷ 4096	$8192t_{cyc}$
			1	÷ 1024	$2048t_{cyc}$
		1	0	÷ 256	$512t_{cyc}$
			1	÷ 64	$128t_{cyc}$
	1	0	0	÷ 16	$32t_{cyc}$
			1	÷ 4	$8t_{cyc}$

Operating States: The serial interface has the following operating states; transitions between them are shown in figure 71.

STS wait state
Transmit clock wait state
Transfer state
Continuous clock output state (only in internal clock mode)

- STS wait state: The serial interface enters STS wait state by MCU reset (00, 10 in figure 71). In STS wait state, the serial interface is initialized and the transmit clock is ignored. If the STS instruction is then executed (01, 11), the serial interface enters transmit clock wait state.

- Transmit clock wait state: Transmit clock wait state is between the STS execution and the falling edge of the first transmit clock. In transmit clock wait state, input of the transmit clock (02, 12) increments the octal counter, shifts the serial data register, and enters the serial interface in transfer state. However, note that if continuous clock output mode is selected in internal clock mode, the serial interface does not enter transfer state but enters continuous clock output state (17).

  The serial interface enters STS wait state by writing data to serial mode register A (SMRA: $005) (04, 14) in transmit clock wait state.

- Transfer state: Transfer state is between the falling edge of the first clock and the rising edge of the eighth clock. In transfer state, the input of eight clocks or the execution of the STS instruction sets the octal counter to 000, and the serial interface enters another state. When the STS instruction is executed (05, 15), transmit clock wait state is entered. When eight clocks are input, transmit clock wait state is entered (03) in external clock mode, and STS wait state is entered (13) in internal clock mode. In internal clock mode, the transmit clock stops after outputting eight clocks.

  In transfer state, writing data to serial mode register A (SMRA: $005) (06, 16) initializes the serial interface, and STS wait state is entered.

  If the state changes from transfer to another state, the serial interrupt request flag (IFS: $023, bit 2) is set by the octal counter that is reset to 000.

- Continuous clock output state (only in internal clock mode): Continuous clock output state is entered only in internal clock mode. In this state, the serial interface does not transmit/ receive data but only outputs the transmit clock from the $\overline{\text{SCK}}$ pin.

  When bits 1 and 0 (PMRA1, PMRA0) of port mode register A (PMRA: $004) are 00 in transmit clock wait state and if the transmit clock is input (17), the serial interface enters continuous clock output state. If serial mode register A (SMRA: $005) is written to in continuous clock output mode (18), STS wait state is entered.

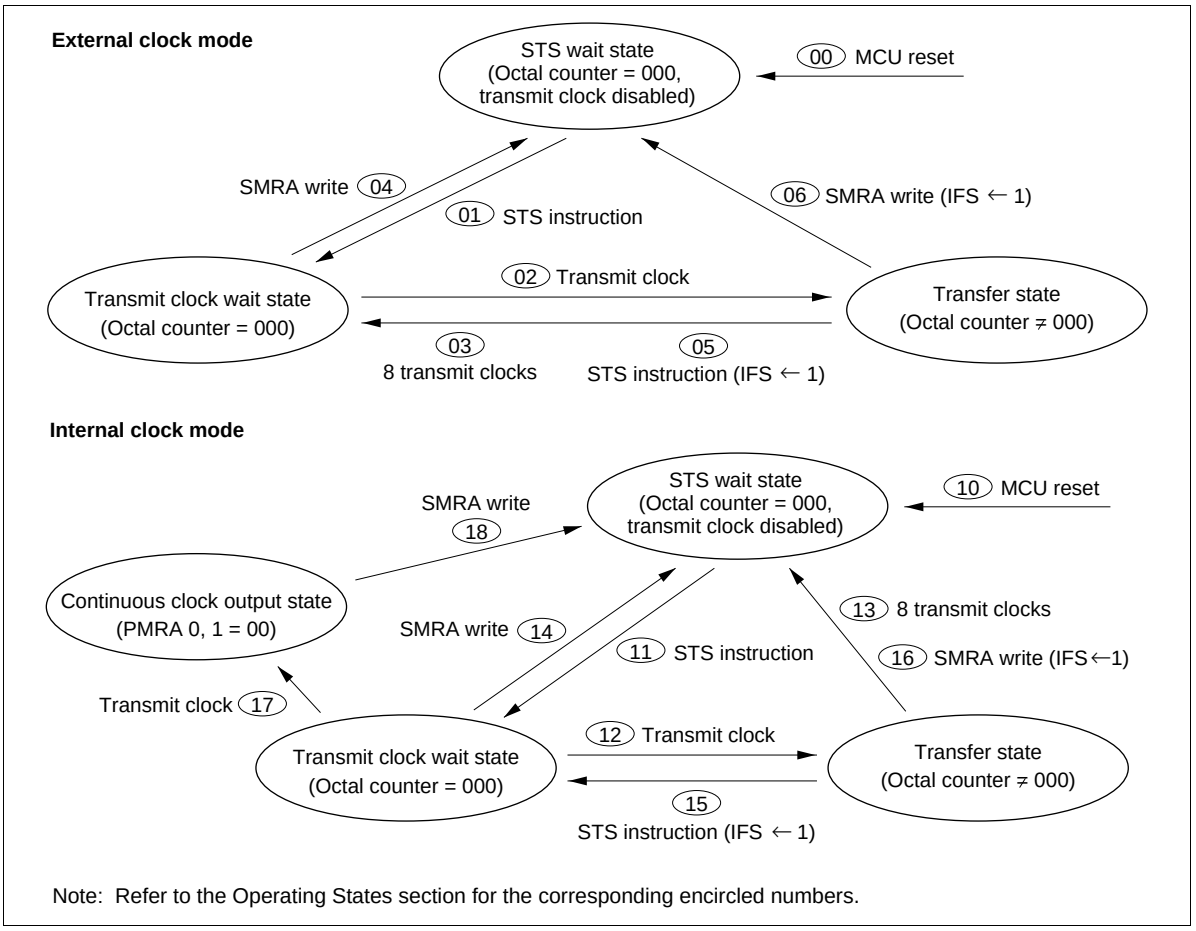

Figure 71 Serial Interface State Transitions

Output Level Control in Idle States: In idle states, that is, STS wait state and transmit clock wait state, the output level of the SO pin can be controlled by setting bit 1 (SMRB1) of serial mode register B (SMRB: $028) to 0 or 1. The output level control example is shown in figure 72. Note that the output level cannot be controlled in transfer state.

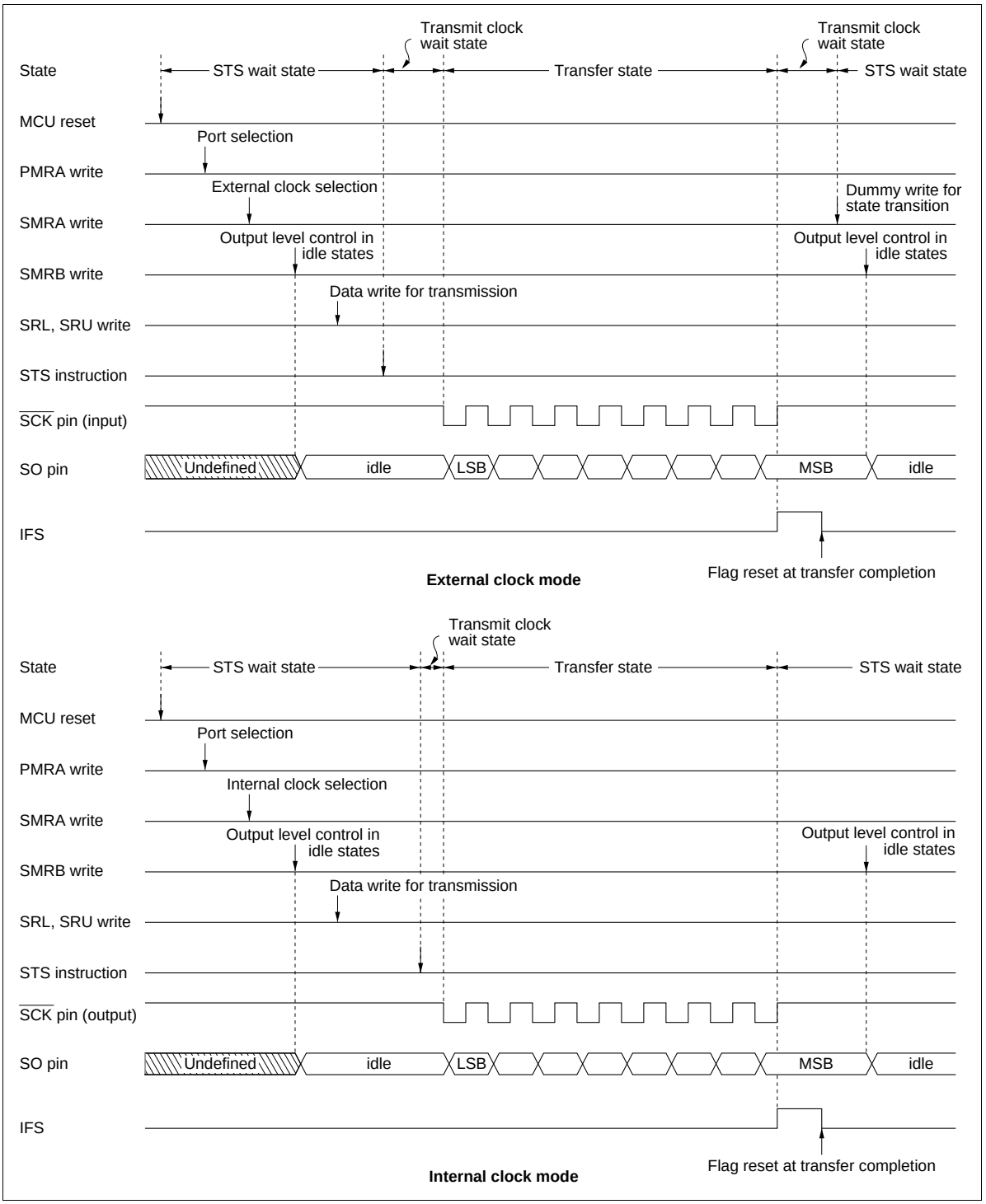

Figure 72 Example of Serial Interface Operation Sequence

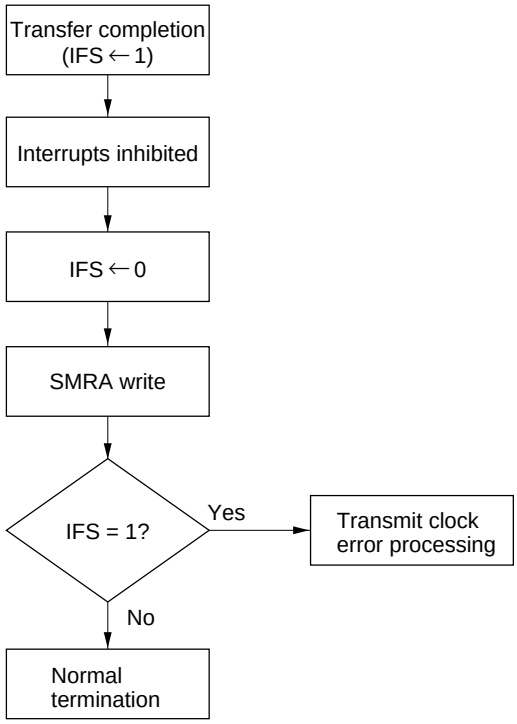

Transmit clock error detection flowchart

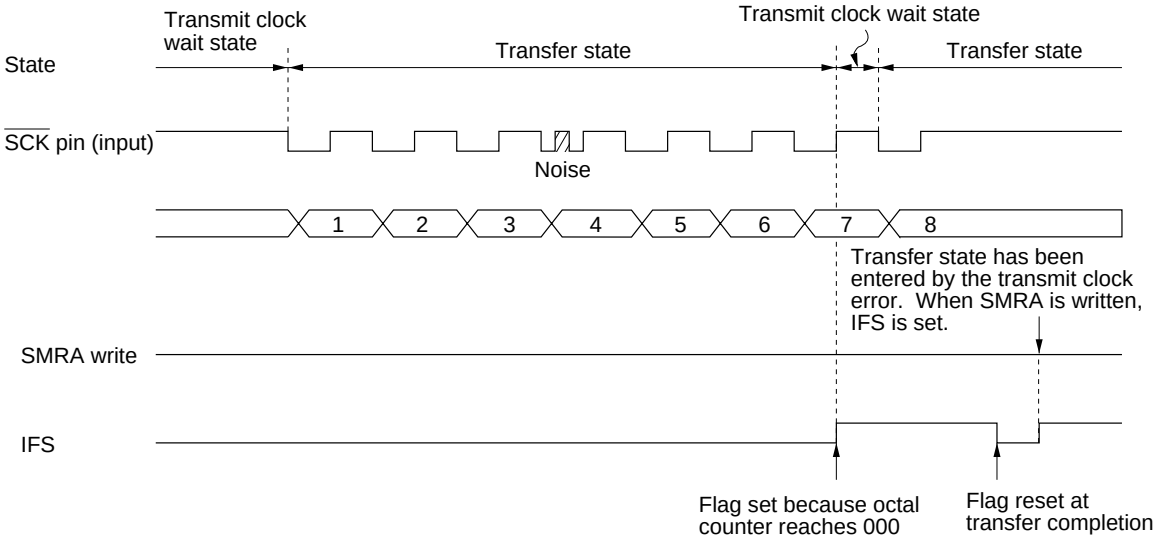

Transmit clock error detection procedure

Figure 73 Transmit Clock Error Detection

Transmit Clock Error Detection (In External Clock Mode): The serial interface will malfunction if a spurious pulse caused by external noise conflicts with a normal transmit clock during transfer. A transmit clock error of this type can be detected as shown in figure 73.

If more than eight transmit clocks are input in transfer state, at the eighth clock including a spurious pulse by noise, the octal counter reaches 000, the serial interrupt request flag (IFS: $023, bit 2) is set, and transmit clock wait state is entered. At the falling edge of the next normal clock signal, the transfer state is entered. After the transfer completion processing is performed and IFS is reset, writing to serial mode register A (SMRA: $005) changes the state from transfer to STS wait. At this time IFS is set again, and therefore the error can be detected.

Notes on Use:

- Initialization after writing to registers: If port mode register A (PMRA: $004) is written to in transmit clock wait state or in transfer state, the serial interface must be initialized by writing to serial mode register A (SMRA: $005) again.

- Serial interrupt request flag (IFS: $023, bit 2) set: If the state is changed from transfer to another by writing to serial mode register A (SMRA: $005) or executing the STS instruction during the first low pulse of the transmit clock, the serial interrupt request flag is not set. To set the serial interrupt request flag, serial mode register A write or STS instruction execution must be programmed to be executed after confirming that the $\overline{SCK}$ pin is at 1, that is, after executing the input instruction to port R2.

Registers for Serial Interface

The serial interface operation is selected, and serial data is read and written by the following registers.

Serial Mode Register A (SMRA: $005)
Serial Mode Register B (SMRB: $028)
Serial Data Register (SRL: $006, SRU: $007)
Port Mode Register A (PMRA: $004)
Miscellaneous Register (MIS: $00C)

Serial Mode Register A (SMRA: $005): This register has the following functions (figure 74).

- $R2_1/\overline{SCK}$ pin function selection
- Transfer clock selection
- Prescaler division ratio selection
- Serial interface initialization

Serial mode register A (SMRA: $005) is a 4-bit write-only register. It is reset to $0 by MCU reset.

A write signal input to serial mode register A (SMRA: $005) discontinues the input of the transmit clock to the serial data register and octal counter, and the octal counter is reset to 000. Therefore, if a write is performed during data transfer, the serial interrupt request flag (IFS: $023, bit 2) is set.

Written data is valid from the second instruction execution cycle after the write operation, so the STS instruction must be executed at least two cycles after that.

Serial mode register A (SMRA: $005)

Bit	3	2	1	0
Initial value	0	0	0	0
Read/Write	W	W	W	W
Bit name	SMRA3	SMRA2	SMRA1	SMRA0

SMRA3	$R2_1/\overline{SCK}$ mode selection
0	$R2_1$
1	$\overline{SCK}$

SMRA2	SMRA1	SMRA0	$\overline{SCK}$	Clock source	Prescaler division ratio
0	0	0	Output	Prescaler	Refer to table 23
		1			
	1	0			
		1			
1	0	0			
		1			
	1	0	Output	System clock	—
		1	Input	External clock	—

Figure 74 Serial Mode Register A (SMRA)

Serial Mode Register B (SMRB: $028): This register has the following functions (figure 75).

- Prescaler division ratio selection
- Output level control in idle states

Serial mode register B is a 2-bit write-only register. It cannot be written during data transfer.

By setting bit 0 (SMRB0) of this register, the prescaler division ratio is selected. Only bit 0 (SMRB0) can be reset to 0 by MCU reset. By setting bit 1 (SMRB1), the output level of the SO pin is controlled in idle states. The output level changes at the same time that SMRB1 is written to.

Serial mode register B (SMRB: $028)

Bit	3	2	1	0
Initial value	—	—	Undefined	0
Read/Write	—	—	W	W
Bit name	Not used	Not used	SMRB1	SMRB0

SMRB1	Output level control in idle states	SMRB0	Transmit clock division ratio
0	Low level	0	Prescaler output divided by 2
1	High level	1	Prescaler output divided by 4

Figure 75 Serial Mode Register B (SMRB)

Serial Data Register (SRL: $006, SRU: $007): This register has the following functions (figures 76 and 77).

- Transmission data write and shift
- Receive data shift and read

Writing data in this register is output from the SO pin, LSB first, synchronously with the falling edge of the transmit clock; data is input, LSB first, through the SI pin at the rising edge of the transmit clock. Input/output timing is shown in figure 78.

Data cannot be read or written during serial data transfer. If a read/write occurs during transfer, the accuracy of the resultant data cannot be guaranteed.

Serial data register (lower digit) (SRL: $006)

Bit	3	2	1	0
Initial value	Undefined	Undefined	Undefined	Undefined
Read/Write	R/W	R/W	R/W	R/W
Bit name	SR3	SR2	SR1	SR0

Figure 76 Serial Data Register (SRL)

Serial data register (upper digit) (SRU: $007)

Bit	3	2	1	0
Initial value	Undefined	Undefined	Undefined	Undefined
Read/Write	R/W	R/W	R/W	R/W
Bit name	SR7	SR6	SR5	SR4

Figure 77 Serial Data Register (SRU)

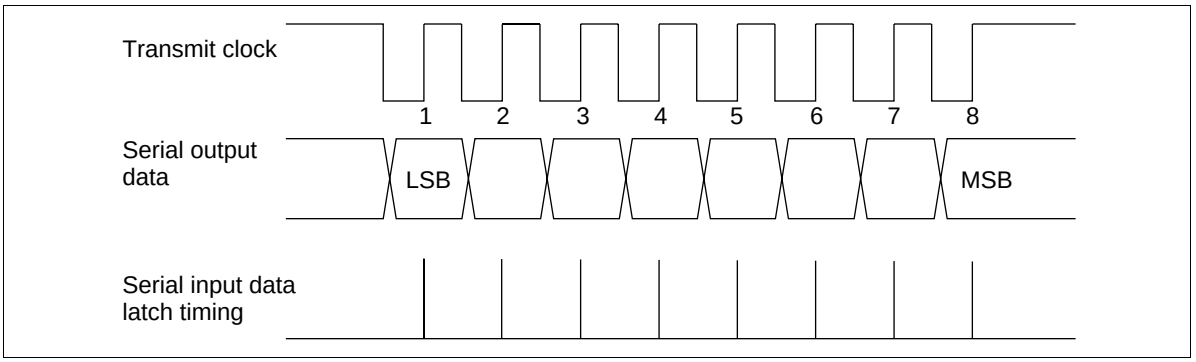

Figure 78 Serial Interface Output Timing

Port Mode Register A (PMRA: $004): This register has the following functions (figure 79).

- $R2_2$/SI pin function selection
- $R2_3$/SO pin function selection

Port mode register A (PMRA: $004) is a 2-bit write-only register, and is reset to $0 by MCU reset.

Port mode register A (PMRA: $004)

Bit	3	2	1	0
Initial value	—	—	0	0
Read/Write	—	—	W	W
Bit name	Not used	Not used	PMRA1	PMRA0

PMRA1	$R2_2$/SI mode selection
0	$R2_2$
1	SI

PMRA0	$R2_3$/SO mode selection
0	$R2_3$
1	SO

Figure 79 Port Mode Register A (PMRA)

Miscellaneous Register (MIS: $00C): This register has the following function (figure 80).

- $R2_3$/SO pin PMOS control

Miscellaneous register (MIS: $00C) is a 4-bit write-only register and is reset to $0 by MCU reset.

Miscellaneous register (MIS: $00C)

Bit	3	2	1	0
Initial value	0	0	0	0
Read/Write	W	W	W	W
Bit name	MIS3	MIS2	MIS1	MIS0

MIS3	Pull-up MOS on/off selection
0	Off
1	On

MIS2	$R2_3$/SO PMOS on/off selection
0	On
1	Off

MIS1	MIS0	t_{RC}
0	0	0.12207 ms
		0.24414 ms
	1	7.8125 ms
1	0	31.25 ms
	1	Not used

Figure 80 Miscellaneous Register (MIS)

A/D Converter

The MCU has a built-in A/D converter that uses a successive approximation method with a resistor ladder. It can measure four analog inputs with 8-bit resolution. As shown in the block diagram of figure 81, the A/D converter has a 4-bit A/D mode register, a 1-bit A/D start flag, and a 4-bit plus 4-bit A/D data register.

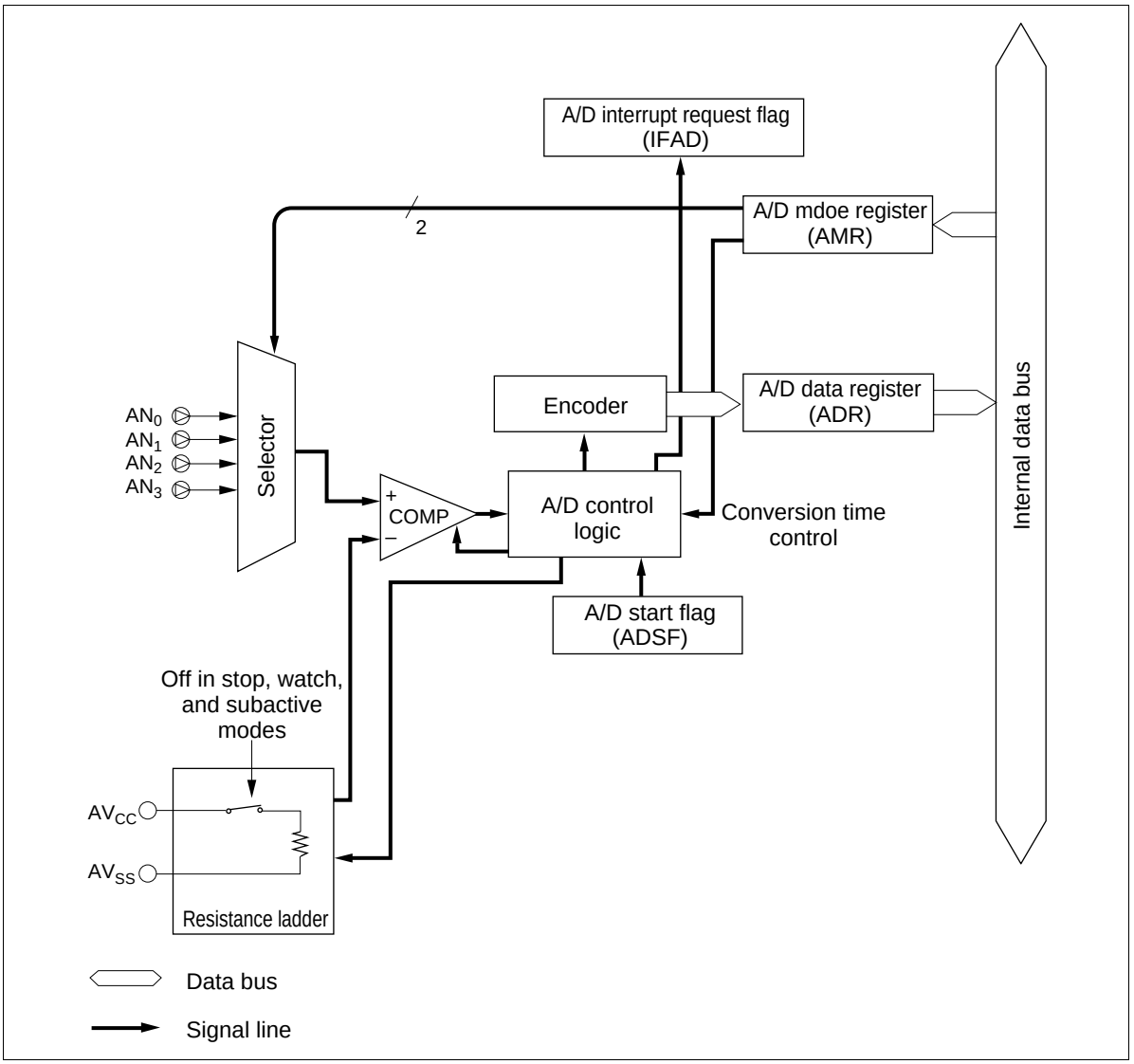

Figure 81 Block Diagram of A/D Converter

A/D Mode Register (AMR: $016): Four-bit write-only register which selects the A/D conversion period and indicates analog input pin information. Bit 0 of the A/D mode register selects the A/D conversion period, and bits 3 and 2 select a channel, as shown in figure 82.

A/D mode register (AMR: $016)

Bit	3	2	1	0
Initial value	0	0	—	0
Read/Write	W	W	—	W
Bit name	AMR3	AMR2	Not used	AMR0

AMR3	AMR2	Analog input selection
0	0	AN_0
0	1	AN_1
1	0	AN_2
1	1	AN_3

AMR0	Conversion time
0	$34t_{cyc}$
1	$67t_{cyc}$

Figure 82 A/D Mode Register (AMR)

A/D Data Register (ADRL: $017, ADRU: $018): Eight-bit read-only register consisting of a 4-bit lower digit and 4-bit upper digit. This register is not cleared by reset. After the completion of A/D conversion, the resultant eight-bit data is held in this register until the start of the next conversion (figures 83, 84, and 85).

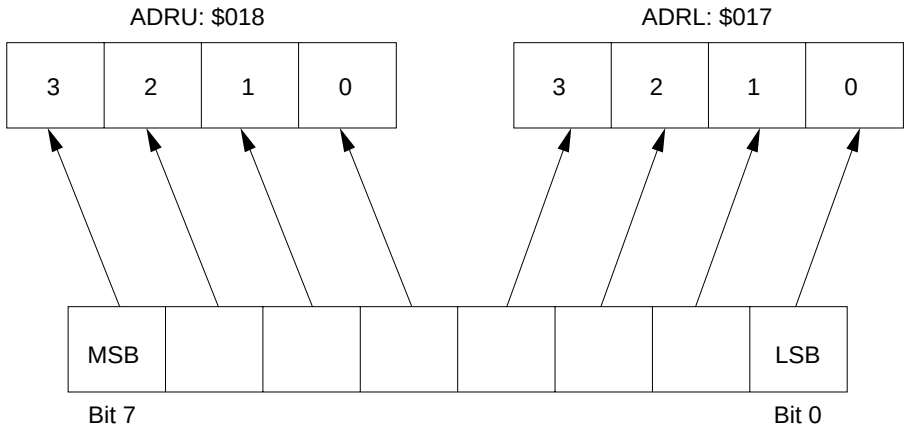

Figure 83 A/D Data Registers (ADRU, ADRL)

A/D data register (lower digit) (ADRL: $017)

Bit	3	2	1	0
Initial value	0	0	0	0
Read/Write	R	R	R	R
Bit name	ADRL3	ADRL2	ADRL1	ADRL0

Figure 84 A/D Data Register Lower Digit (ADRL)

A/D data register (upper digit) (ADRU: $018)

Bit	3	2	1	0
Initial value	1	0	0	0
Read/Write	R	R	R	R
Bit name	ADRU3	ADRU2	ADRU1	ADRU0

Figure 85 A/D Data Register Upper Digit (ADRU)

A/D Start Flag (ADSF: $020, Bit 2): One-bit flag that initiates A/D conversion when set to 1. At the completion of A/D conversion, the converted data is stored in the A/D data register and the A/D start flag is cleared. Refer to figure 86.

A/D start flag (ADSF: $020, bit 2)

Bit	3	2	1	0
Initial value	0	0	0	0
Read/Write	R/W	R/W	R/W	R/W
Bit name	DTON	ADSF	WDON	LSON

DTON	WDON
Refer to the description of operating modes	Refer to the description of timers

	ADSF (A/D start flag)
1	A/D conversion started
0	A/D conversion completed

LSON
Refer to the description of operating modes

Figure 86 A/D Start Flag (ADSF)

Note on Use: Use the SEM and SEMD instructions to write data to the A/D start flag (ADSF: $020, bit 2), but make sure that the A/D start flag is not written to during A/D conversion. Data read from the A/D data register (ADRL: $017, ADRU: $018) during A/D conversion cannot be guaranteed.

The A/D converter does not operate in the stop, watch, and subactive modes because of the OSC clock. During these low-power dissipation modes, current through the resistor ladder is cut off to decrease the power input.

LCD Controller/Driver

The MCU has an LCD controller and driver which drive 4 common signal pins and 52 segment pins. The controller consists of a RAM area in which display data is stored, a display control register (LCR: $01B), and a duty-cycle/clock-control register (LMR: $01C) (figure 87).

Four duty cycles and the LCD clock are programmable, and a built-in dual-port RAM ensures that display data can be automatically transmitted to the segment signal pins without program intervention. If a 32-kHz oscillation clock is selected as the LCD clock source, the LCD can even be used in watch mode, in which the system clock stops.

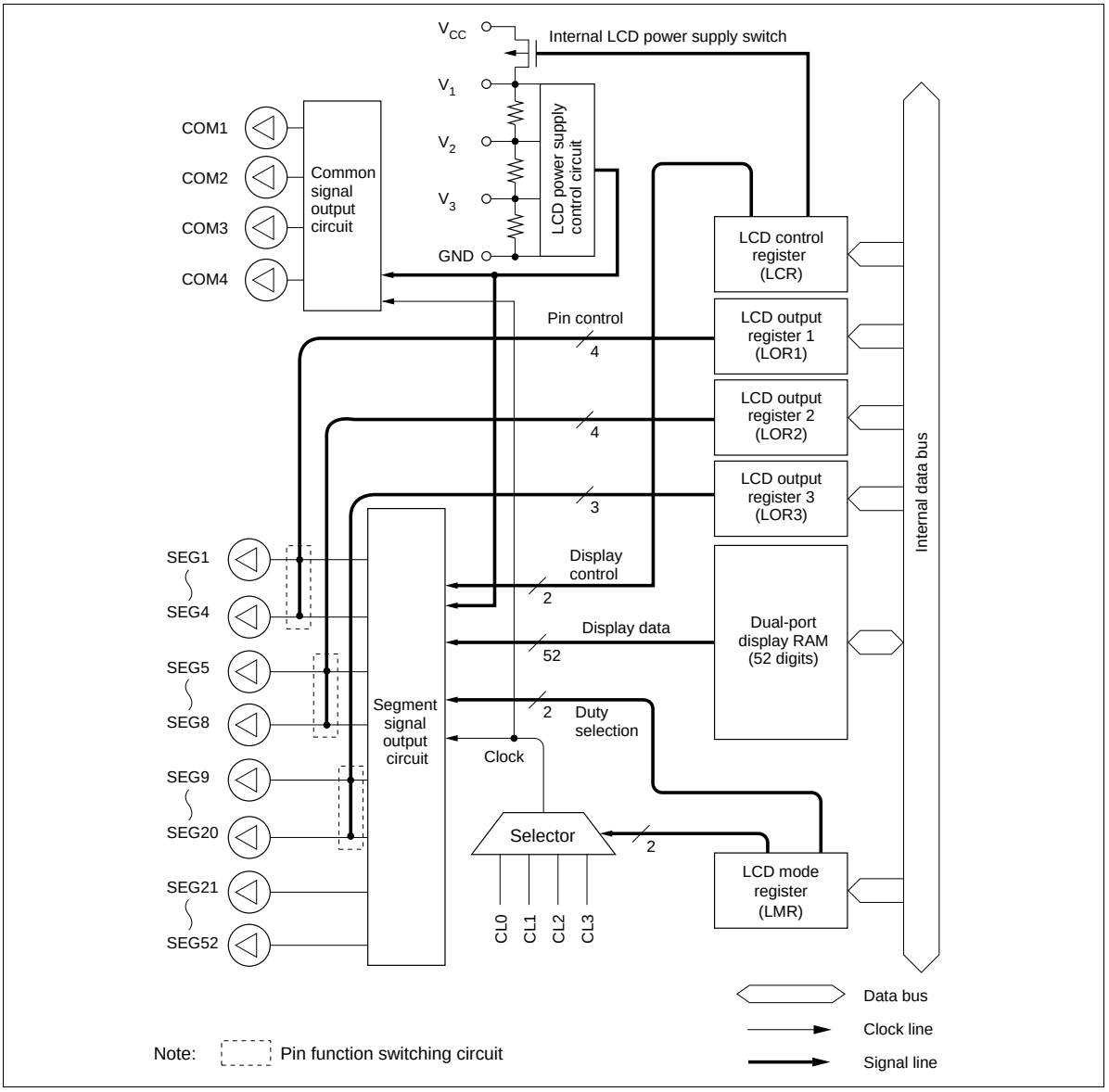

Figure 87 LCD Controller/Driver Block Diagram

LCD Data Area and Segment Data ($050–$083): As shown in figure 88, each bit of the storage area corresponds to one of four duty cycles. If data is written to an area corresponding to a certain duty cycle, it is automatically output to the corresponding segments as display data.

RAM address	Bit 3	Bit 2	Bit 1	Bit 0
$050	SEG1	SEG1	SEG1	SEG1
$051	SEG2	SEG2	SEG2	SEG2
$052	SEG3	SEG3	SEG3	SEG3
$053	SEG4	SEG4	SEG4	SEG4
$054	SEG5	SEG5	SEG5	SEG5
$055	SEG6	SEG6	SEG6	SEG6
$056	SEG7	SEG7	SEG7	SEG7
$057	SEG8	SEG8	SEG8	SEG8
$058	SEG9	SEG9	SEG9	SEG9
$059	SEG10	SEG10	SEG10	SEG10
$05A	SEG11	SEG11	SEG11	SEG11
$05B	SEG12	SEG12	SEG12	SEG12
$05C	SEG13	SEG13	SEG13	SEG13
$05D	SEG14	SEG14	SEG14	SEG14
$05E	SEG15	SEG15	SEG15	SEG15
$05F	SEG16	SEG16	SEG16	SEG16
$060	SEG17	SEG17	SEG17	SEG17
$061	SEG18	SEG18	SEG18	SEG18
$062	SEG19	SEG19	SEG19	SEG19
$063	SEG20	SEG20	SEG20	SEG20
$064	SEG21	SEG21	SEG21	SEG21
$065	SEG22	SEG22	SEG22	SEG22
$066	SEG23	SEG23	SEG23	SEG23
$067	SEG24	SEG24	SEG24	SEG24
$068	SEG25	SEG25	SEG25	SEG25
$069	SEG26	SEG26	SEG26	SEG26
	COM4	COM3	COM2	COM1

RAM address	Bit 3	Bit 2	Bit 1	Bit 0
$06A	SEG27	SEG27	SEG27	SEG27
$06B	SEG28	SEG28	SEG28	SEG28
$06C	SEG29	SEG29	SEG29	SEG29
$06D	SEG30	SEG30	SEG30	SEG30
$06E	SEG31	SEG31	SEG31	SEG31
$06F	SEG32	SEG32	SEG32	SEG32
$070	SEG33	SEG33	SEG33	SEG33
$071	SEG34	SEG34	SEG34	SEG34
$072	SEG35	SEG35	SEG35	SEG35
$073	SEG36	SEG36	SEG36	SEG36
$074	SEG37	SEG37	SEG37	SEG37
$075	SEG38	SEG38	SEG38	SEG38
$076	SEG39	SEG39	SEG39	SEG39
$077	SEG40	SEG40	SEG40	SEG40
$078	SEG41	SEG41	SEG41	SEG41
$079	SEG42	SEG42	SEG42	SEG42
$07A	SEG43	SEG43	SEG43	SEG43
$07B	SEG44	SEG44	SEG44	SEG44
$07C	SEG45	SEG45	SEG45	SEG45
$07D	SEG46	SEG46	SEG46	SEG46
$07E	SEG47	SEG47	SEG47	SEG47
$07F	SEG48	SEG48	SEG48	SEG48
$080	SEG49	SEG49	SEG49	SEG49
$081	SEG50	SEG50	SEG50	SEG50
$082	SEG51	SEG51	SEG51	SEG51
$083	SEG52	SEG52	SEG52	SEG52
	COM4	COM3	COM2	COM1

Figure 88 Configuration of LCD RAM Area (for Dual-Port RAM)

LCD Control Register (LCR: $01B): Three-bit write-only register which controls LCD blanking, on/off switching of the liquid-crystal display's power supply division resistor, and display in watch and subactive modes, as shown in figure 89.

- Blank/display
  Blank: Segment signals are turned off, regardless of LCD RAM data setting.
  Display: LCD RAM data is output as segment signals.
- Power switch on/off
  Off: The power switch is off.
  On: The power switch is on and V_1 is V_{CC}.
- Watch/subactive mode display
  Off: In watch and subactive modes, all common and segment pins are grounded and the liquid-crystal power switch is turned off.
  On: In watch and subactive modes, LCD RAM data is output as segment signals.

LCD display control register (LCR: $01B)

Bit	3	2	1	0
Initial value	—	0	0	0
Read/Write	—	W	W	W
Bit name	Not used	LCR2	LCR1	LCR0

LCR2	Display on/off selection in watch and subactive modes
0	Off
1	On

LCR1	Power switch on/off
0	Off
1	On

LCR0	Blank/display
0	Blank
1	Display

Figure 89 LCD Control Register (LCR)

LCD Duty-Cycle/Clock Control Register (LMR: $01C): Four-bit write-only register which selects the display duty cycle and LCD clock source, as shown in figure 90. The dependence of frame frequency on duty cycle is listed in table 24.

LCD duty cycle/clock control register (LMR: $01C)

Bit	3	2	1	0
Initial value	0	0	0	0
Read/Write	W	W	W	W
Bit name	LMR3	LMR2	LMR1	LMR0

LMR3	LMR2	Input clock source selection
0	0	CL0 (32.768-kHz × duty/64: when 32.768-kHz oscillation is used)
0	1	CL1 (f_{OSC} × duty cycle/1024)
1	0	CL2 (f_{OSC} × duty cycle/8192)
1	1	CL3 (refer to table 24)

LMR1	LMR0	Duty cycle selection
0	0	1/4 duty
0	1	1/3 duty
1	0	1/2 duty
1	1	Static

Figure 90 LCD Duty-Cycle/Clock Control Register (LMR)

Table 24 LCD Frame Frequencies for Different Duty Cycles

				Frame Frequencies			
Duty Cycle	**LMR3**	**LMR2**		**f_{OSC} = 400 kHz**	**f_{OSC} = 800 kHZ**	**f_{OSC} = 2 MHz**	**f_{OSC} = 4 MHz**
Static	0	0	CL0	512 Hz			
		1	CL1	390.6 Hz	781.3 Hz	1953 Hz	3906 Hz
	1	0	CL2	48.8 Hz	97.7 Hz	244.1 Hz	488.3 Hz
		1	CL3*	24.4 Hz	48.8 Hz	122.1 Hz	244.1 Hz
				64 Hz			
1/2	0	0	CL0	256 Hz			
		1	CL1	195.3 Hz	390.6 Hz	976.6 Hz	1953 Hz
	1	0	CL2	24.4 Hz	48.8 Hz	122.1 Hz	244.1 Hz
		1	CL3*	12.2 Hz	24.4 Hz	61 Hz	122.1 Hz
				32 Hz			
1/3	0	0	CL0	170.7 Hz			
		1	CL1	130.2 Hz	260.4 Hz	651 Hz	1302 Hz
	1	0	CL2	16.3 Hz	32.6 Hz	81.4 Hz	162.8 Hz
		1	CL3*	8.1 Hz	16.3 Hz	40.7 Hz	81.4 Hz
				21.3 Hz			
1/4	0	0	CL0	128 Hz			
		1	CL1	97.7 Hz	195.3 Hz	488.3 Hz	976.6 Hz
	1	0	CL2	12.2 Hz	24.4 Hz	61 Hz	122.1 Hz
		1	CL3*	6.1 Hz	12.2 Hz	30.5 Hz	61 Hz
				16 Hz			

Note: * The division ratio depends on the value of bit 3 of timer mode register A (TMA).
Upper value: When TMA3 = 0, CL3 = $f_{OSC} \times$ duty cycle/16384.
Lower value: When TMA3 = 1, CL3 = 32.768 kHz $\times$ duty cycle/512.

LCD Output Register 1 (LOR1: $01D): Write-only register used to specify ports $R3_0$–$R3_3$ as pins SEG1–SEG4 by individual pins (figure 91).

LCD output register 1 (LOR1: $01D)

Bit	3	2	1	0
Initial value	0	0	0	0
Read/Write	W	W	W	W
Bit name	LOR13	LOR12	LOR11	LOR10

LOR13	$R3_3$/SEG4 mode selection
0	$R3_3$
1	SEG4

LOR11	$R3_1$/SEG2 mode selection
0	$R3_1$
1	SEG2

LOR12	$R3_2$/SEG3 mode selection
0	$R3_2$
1	SEG3

LOR10	$R3_0$/SEG1 mode selection
0	$R3_0$
1	SEG1

Figure 91 LCD Output Register 1 (LOR1)

LCD Output Register 2 (LOR2: $01E): Write-only register used to specify ports $R4_0$–$R4_3$ as pins SEG5–SEG8 by individual pins (figure 92).

LCD output register 2 (LOR2: $01E)

Bit	3	2	1	0
Initial value	0	0	0	0
Read/Write	W	W	W	W
Bit name	LOR23	LOR22	LOR21	LOR20

LOR23	$R4_3$/SEG8 mode selection
0	$R4_3$
1	SEG8

LOR21	$R4_1$/SEG6 mode selection
0	$R4_1$
1	SEG6

LOR22	$R4_2$/SEG7 mode selection
0	$R4_2$
1	SEG7

LOR20	$R4_0$/SEG5 mode selection
0	$R4_0$
1	SEG5

Figure 92 LCD Output Register 2 (LOR2)

LCD Output Register 3 (LOR3: $01F): Write-only register used to specify ports $R5_0$–$R7_3$ as pins SEG9–SEG20 in 4-pin units (figure 93).

LCD output register 3 (LOR3: $01F)

Bit	3	2	1	0
Initial value	—	0	0	0
Read/Write	—	W	W	W
Bit name	Not used	LOR32	LOR31	LOR30

LOR32	$R7_0$/SEG17–$R7_3$/SEG20 mode selection
0	$R7_0$–$R7_3$
1	SEG17–SEG20

LOR30	$R5_0$/SEG9–$R5_3$/SEG12 mode selection
0	$R5_0$–$R5_3$
1	SEG9–SEG12

LOR31	$R6_0$/SEG13–$R6_3$/SEG16 mode selection
0	$R6_0$–$R6_3$
1	SEG13–SEG16

Figure 93 LCD Output Register 3 (LOR3)

Large Liquid-Crystal Panel Drive and V_{LCD}: To drive a large-capacity LCD, decrease the resistance of the built-in division resistors by attaching external resistors in parallel, as shown in figure 94.

The size of these resistors cannot be simply calculated from the LCD load capacitance because the matrix configuration of the LCD complicates the paths of charge/discharge currents flowing through the capacitors—the resistance will also vary with lighting conditions. This size must be determined by trial-and-error, taking into account the power dissipation of the device using the LCD, but a resistance of 1 to 10 kΩ would usually be suitable. (Another effective method is to attach capacitors of 0.1 to 0.3 μF.)

Always turn off the power switch (set bit 1 of the LCR to 0) before changing the liquid-crystal drive voltage (V_{LCD}).

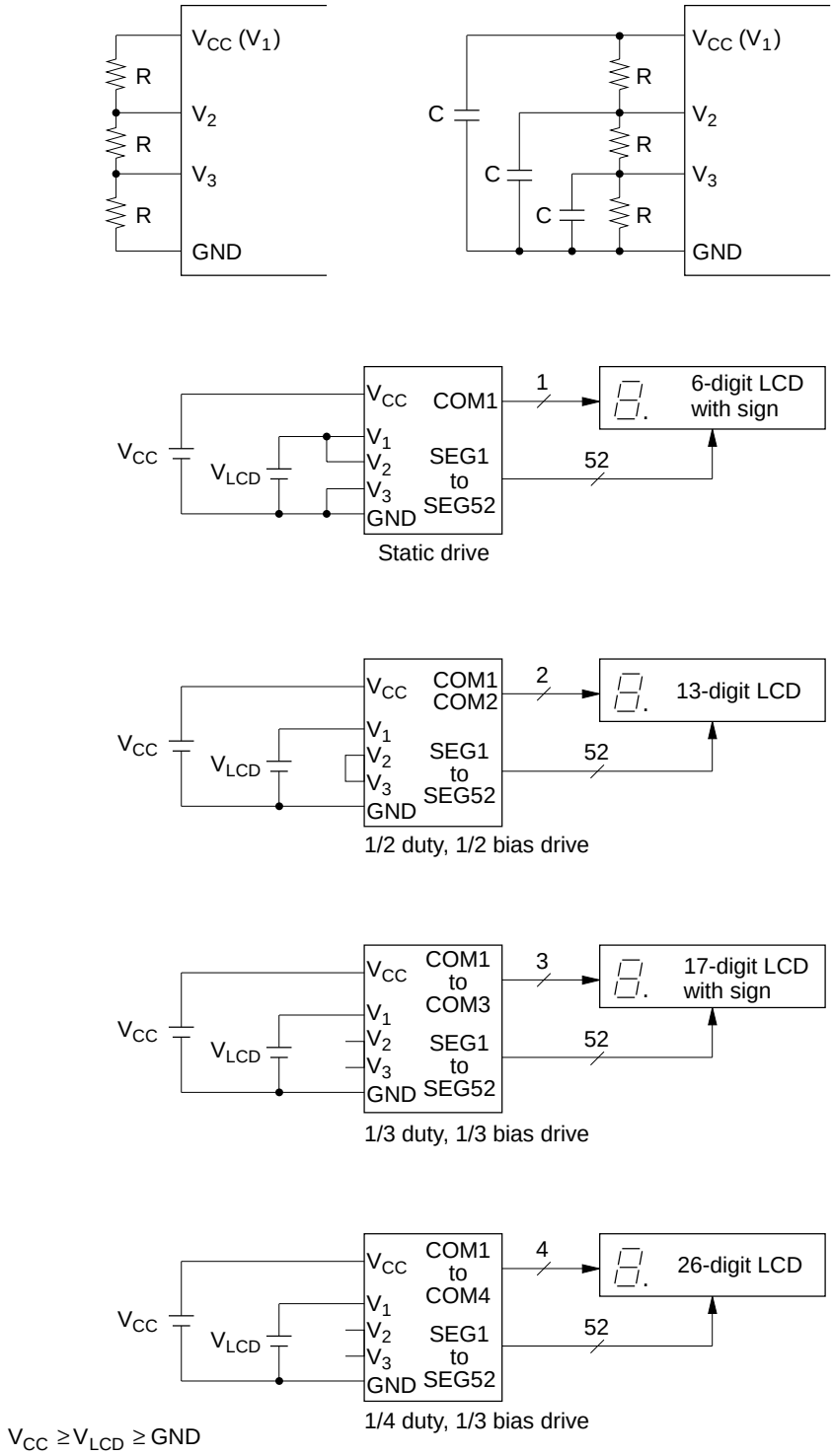

Figure 94 LCD Connection Examples

ZTAT™ Microcomputer with Built-in Programmable ROM

Programming of Built-in programmable ROM

The MCU can stop its function as an MCU in PROM mode for programming the built-in PROM.

PROM mode is set up by setting the $\overline{TEST}$, $\overline{M}_0$, and $\overline{M}_1$ terminals to “Low” level and the RESET terminal to “High” level.

Writing and reading specifications of the PROM are the same as those for the commercial EPROM27256. Using a socket adapter for specific use of each product, programming is possible with a general-purpose PROM writer.

Since an instruction of the HMCS400 series is 10 bits long, a conversion circuit is incorporated to adapt the general-purpose PROM writer. This circuit splits each instruction into five lower bits and five higher bits to write from or read to two addresses. This enables use of a general-purpose PROM. For instance, to write to a 16kword of built-in PROM with a general-purpose PROM writer, specify 32kbyte address ($0000-$7FFF). An example of PROM memory map is shown in figure 95.

Notes:

1. When programming with a PROM writer, set up each ROM size to the address given in table b. If it is programmed erroneously to an address given in table 27 or later, check of writing of PROM may become impossible. Particularly, caution should be exercised in the case of a plastic package since reprogramming is impossible with it. Set the data in unused addresses to $FF.
2. If the indexes of the PROM writer socket, socket adapter and product are not aligned precisely, the product may break down due to overcurrent. Be sure to check that they are properly set to the writer before starting the writing process.
3. Two levels of program voltages (V_{PP}) are available for the PROM: 12.5V and 21V. Our product employs a V_{PP} of 12.5V. If a voltage of 21V is applied, permanent breakdown of the product will result. The V_{PP} of 12.5V is obtained for the PROM writer by setting it according to the Intel 27258 specifications.

Writing/verification

Programming of the built-in program ROM employs a high speed programming method. With this method, high speed writing is effected without voltage stress to the device or without damaging the reliability of the written data.

A basic programming flow chart is shown in figure 96 and a timing chart in figure 97.

For precautions for PROM writing procedure, refer to Section 2, "Characteristics of ZTAT™ Microcomputer's Built-in Programmable ROM and precautions for its Applications."

Table 25 Selection of Mode

Mode	$\overline{CE}$	$\overline{OE}$	V_{PP}	$O_0 – O_7$
Writing	“Low”	“High”	V_{PP}	Data input
Verification	“High”	“Low”	V_{PP}	Data output
Prohibition of programming	“High”	“High”	V_{PP}	High impedance

Table 26 PROM Writer Program Address

ROM size	Address
8k	$0000 – $3FFF
12k	$0000 – $5FFF
16k	$0000 – $7FFF

Programmable ROM (HD4074829)

The HD4074829 is a ZTAT™ microcomputer with built-in PROM that can be programmed in PROM mode.

PROM Mode Pin Description

Pin No.		MCU Mode		PROM Mode		Pin No.		MCU Mode		PROM Mode	
FP-100B TFP-100B	FP-100A	Pin Name	I/O	Pin Name	I/O	FP-100B TFP-100B	FP-100A	Pin Name	I/O	Pin Name	I/O
1	3	AV_{CC}		V_{CC}		24	26	$D_{10}/\overline{STOPC}$	I/O	A_9	I
2	4	AN_0	I			25	27	$D_{11}/\overline{INT}_0$	I/O	V_{PP}	
3	5	AN_1	I			26	28	$R0_0/\overline{INT}_1$	I/O	GND	
4	6	AN_2	I			27	29	$R0_1/INT_2$	I/O	GND	
5	7	AN_3	I			28	30	$R0_2/INT_3$	I/O		
6	8	AV_{SS}		GND		29	31	$R0_3/INT_4$	I/O		
7	9	$\overline{TEST}$	I	GND		30	32	$R1_0$/TOB	I/O	A_5	I
8	10	OSC_1	I	V_{CC}		31	33	$R1_1$/TOC	I/O	A_6	I
9	11	OSC_2	O			32	34	$R1_2$/TOD	I/O	A_7	I
10	12	RESET	I	V_{CC}		33	35	$R1_3/\overline{EVNB}$	I/O	A_8	I
11	13	X1	I	GND		34	36	$R2_0$/EVND	I/O	A_0	I
12	14	X2	O			35	37	$R2_1/\overline{SCK}$	I/O	A_{10}	I
13	15	GND		GND		36	38	$R2_2$/SI	I/O	A_{11}	I
14	16	D_0	I/O	$\overline{CE}$	I	37	39	$R2_3$/SO	I/O	A_{12}	I
15	17	D_1	I/O	$\overline{OE}$	I	38	40	$R3_0$/SEG1	I/O	A_{13}	I
16	18	D_2	I/O	V_{CC}		39	41	$R3_1$/SEG2	I/O	A_{14}	I
17	19	D_3	I/O	V_{CC}		40	42	$R3_2$/SEG3	I/O	O_0	I/O
18	20	D_4	I/O			41	43	$R3_3$/SEG4	I/O	O_1	I/O
19	21	D_5	I/O			42	44	$R4_0$/SEG5	I/O	O_2	I/O
20	22	D_6	I/O			43	45	$R4_1$/SEG6	I/O	O_3	I/O
21	23	D_7	I/O			44	46	$R4_2$/SEG7	I/O	O_4	I/O
22	24	D_8	I/O			45	47	$R4_3$/SEG8	I/O	O_5	I/O
23	25	D_9	I/O			46	48	$R5_0$/SEG9	I/O	O_6	I/O

Notes on next page.

Pin No.		MCU Mode		PROM Mode		Pin No.		MCU Mode		PROM Mode	
FP-100B TFP-100B	FP-100A	Pin Name	I/O	Pin Name	I/O	FP-100B TFP-100B	FP-100A	Pin Name	I/O	Pin Name	I/O
47	49	$R5_1$/SEG10	I/O	O_7	I/O	74	76	SEG37	O		
48	50	$R5_2$/SEG11	I/O	O_4	I/O	75	77	SEG38	O		
49	51	$R5_3$/SEG12	I/O	O_3	I/O	76	78	SEG39	O		
50	52	$R6_0$/SEG13	I/O	O_2	I/O	77	79	SEG40	O		
51	53	$R6_1$/SEG14	I/O	O_1	I/O	78	80	SEG41	O		
52	54	$R6_2$/SEG15	I/O	O_0	I/O	79	81	SEG42	O		
53	55	$R6_3$/SEG16	I/O	V_{CC}		80	82	SEG43	O		
54	56	$R7_0$/SEG17	I/O	A_1	I	81	83	SEG44	O		
55	57	$R7_1$/SEG18	I/O	A_2	I	82	84	SEG45	O		
56	58	$R7_2$/SEG19	I/O	A_3	I	83	85	SEG46	O		
57	59	$R7_3$/SEG20	I/O	A_4	I	84	86	SEG47	O		
58	60	SEG21	O			85	87	SEG48	O		
59	61	SEG22	O			86	88	SEG49	O		
60	62	SEG23	O			87	89	SEG50	O		
61	63	SEG24	O			88	90	SEG51	O		
62	64	SEG25	O			89	91	SEG52	O		
63	65	SEG26	O			90	92	COM1	O		
64	66	SEG27	O			91	93	COM2	O		
65	67	SEG28	O			92	94	COM3	O		
66	68	SEG29	O			93	95	COM4	O		
67	69	SEG30	O			94	96	V_1			
68	70	SEG31	O			95	97	V_2			
69	71	SEG32	O			96	98	V_3			
70	72	SEG33	O			97	99	V_{CC}		V_{CC}	
71	73	SEG34	O			98	100	NUMO	Note3		
72	74	SEG35	O			99	1	NUMO	Note3		
73	75	SEG36	O			100	2	NUMG	Note3		

Notes: 1. I/O: Input/output pin, I: Input pin, O: Output pin
2. Each of O_0–O_4 has two pins; before using, each pair must be connected together.
3. NUMG and NUMO are not pins for user applications. Connect NUMG to the same potential as GND. Leave NUMO open.

PROM Mode Pin Functions

V_{PP}: Applies the programming voltage (12.5 V ± 0.3 V) to the built-in PROM.

$\overline{CE}$: Inputs a control signal to enable PROM programming and verification.

$\overline{OE}$: Inputs a data output control signal for verification.

A_0–A_{14}: Act as address input pins of the built-in PROM.

O_0–O_7: Act as data bus input pins of the built-in PROM. Each of O_0–O_4 has two pins; before using these pins, connect each pair together.

$\overline{M_0}$, $\overline{M_1}$, RESET, $\overline{TEST}$: Used to set PROM mode. The MCU is set to the PROM mode by pulling $\overline{M_0}$, $\overline{M_1}$, and $\overline{TEST}$ low, and RESET high.

Other Pins (FP-100B/FP-100A): Connect pins 1/3 (AV_{CC}), 8/10 (OSC_1), 16/18 (D_2), 17/19 (D_3), 53/55 ($R6_3$/SEG16), and 97/99 (V_{CC}) to V_{CC}, and pins 6/8 (AV_{SS}) and 11/13 (X1) to GND. Leave other pins open.

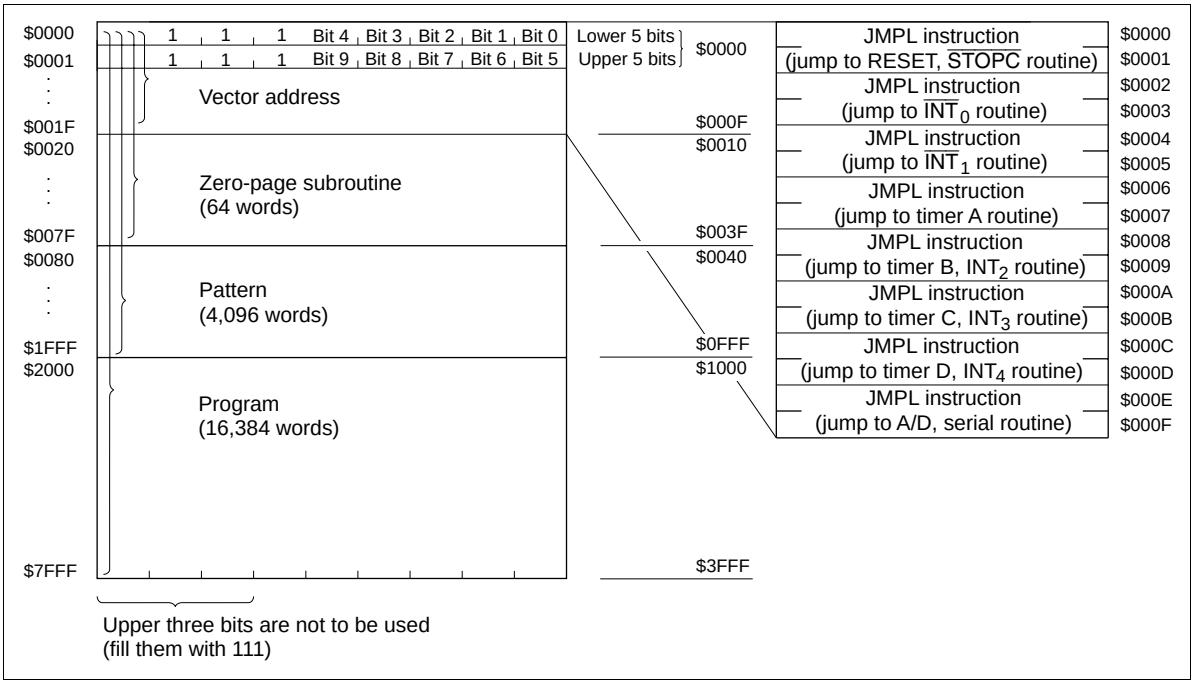

Figure 95 Memory Map in PROM Mode

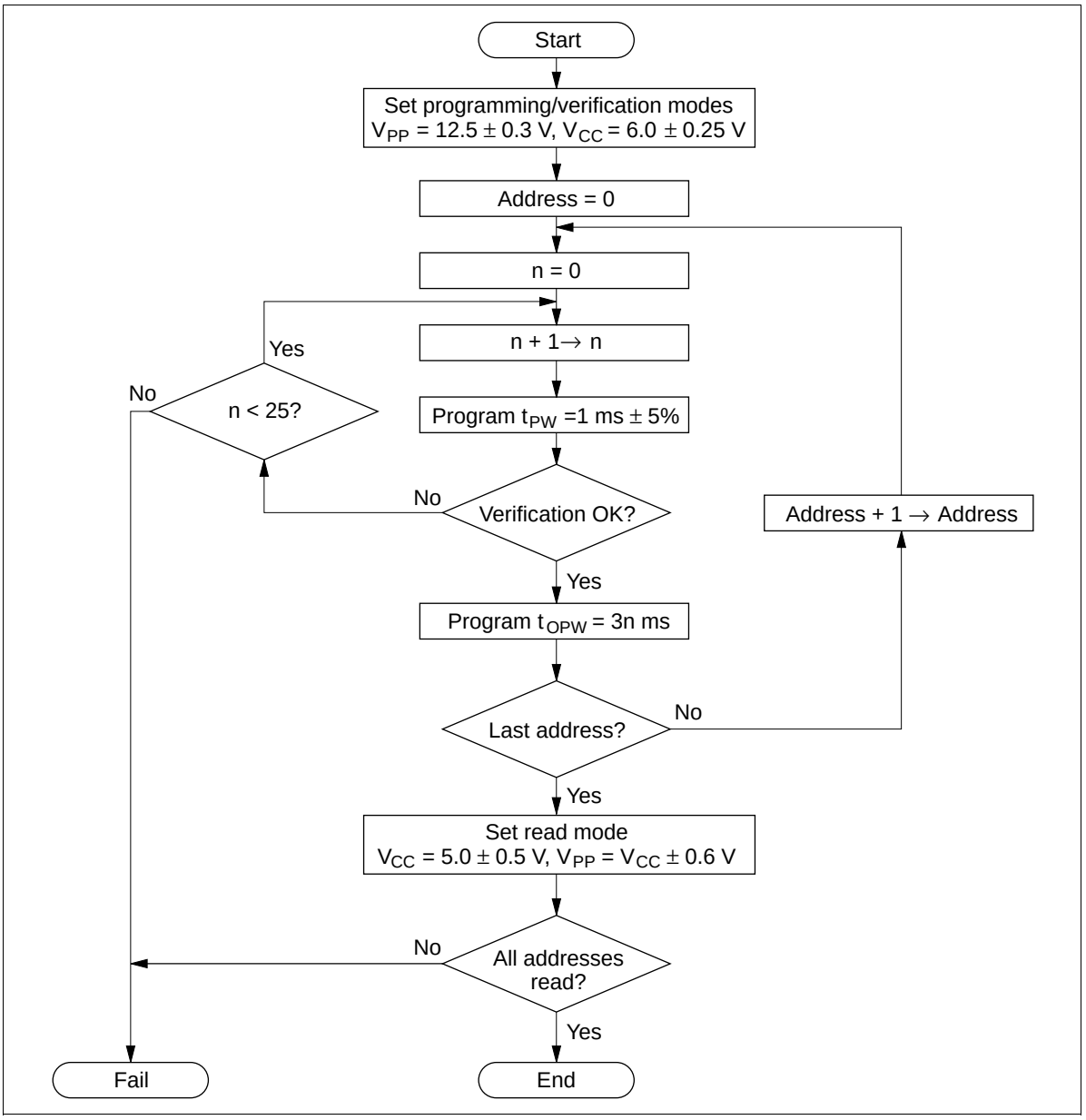

Figure 96 Flowchart of High-Speed Programming

Programming Electrical Characteristics

DC Characteristics (V_{CC} = 6.0 V ± 0.25 V, V_{PP} = 12.5 V ± 0.3 V, T_a = 25°C ± 5°C, unless otherwise specified)

Item	Symbol	Pin(s)	Min	Typ	Max	Unit	Test Condition
Input high voltage level	V_{IH}	O_0–O_7, A_0–A_{14}, $\overline{OE}$, $\overline{CE}$	2.2	—	V_{CC} + 0.3	V	
Input low voltage level	V_{IL}	O_0–O_7, A_0–A_{14}, $\overline{OE}$, $\overline{CE}$	–0.3	—	0.8	V	
Output high voltage level	V_{OH}	O_0–O_7	2.4	—	—	V	I_{OH} = –200 µA
Output low voltage level	V_{OL}	O_0–O_7	—	—	0.4	V	I_{OL} = 1.6 mA
Input leakage current	$\lvert I_{IL} \rvert$	O_0–O_7, A_0–A_{14}, $\overline{OE}$, $\overline{CE}$	—	—	2	µA	V_{in} = 5.25 V/0.5 V
V_{CC} current	I_{CC}		—	—	30	mA	
V_{PP} current	I_{PP}		—	—	40	mA	

AC Characteristics (V_{CC} = 6.0 V ± 0.25 V, V_{PP} = 12.5 V ± 0.3 V, T_a = 25°C ± 5°C, unless otherwise specified)

Item	Symbol	Min	Typ	Max	Unit	Test Condition
Address setup time	t_{AS}	2	—	—	µs	See figure 97
$\overline{OE}$ setup time	t_{OES}	2	—	—	µs	
Data setup time	t_{DS}	2	—	—	µs	
Address hold time	t_{AH}	0	—	—	µs	
Data hold time	t_{DH}	2	—	—	µs	
Data output disable time	t_{DF}	—	—	130	ns	
V_{PP} setup time	t_{VPS}	2	—	—	µs	
Program pulse width	t_{PW}	0.95	1.0	1.05	ms	
$\overline{CE}$ pulse width during overprogramming	t_{OPW}	2.85	—	78.75	ms	
V_{CC} setup time	t_{VCS}	2	—	—	µs	
Data output delay time	t_{OE}	0	—	500	ns	

Input pulse level: 0.8 V to 2.2 V
Input rise/fall time: ≤ 20 ns
Input timing reference levels: 1.0 V, 2.0 V
Output timing reference levels: 0.8 V, 2.0 V

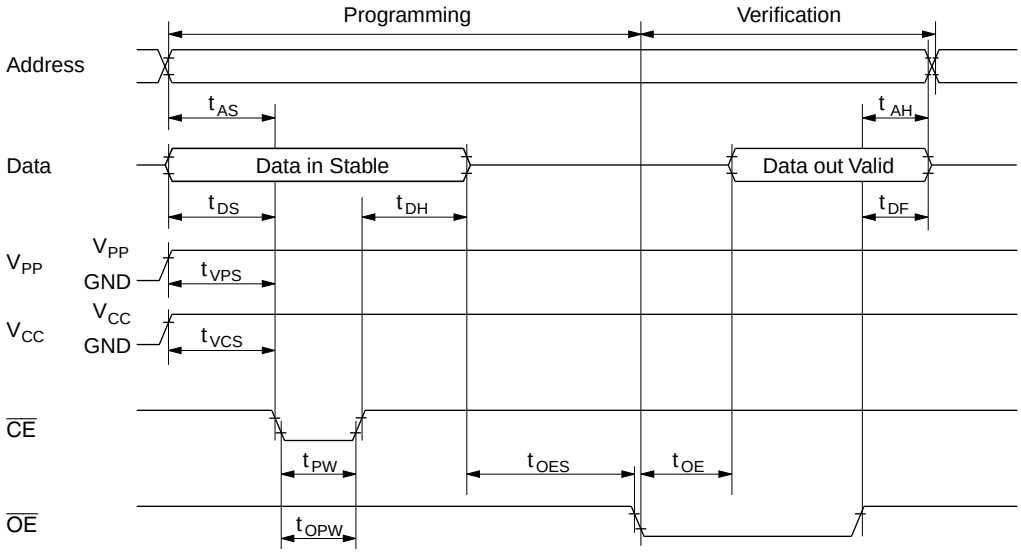

Figure 97 PROM Programming/Verification Timing

Notes on PROM Programming

Principles of Programming/Erasure: A memory cell in a ZTAT™ microcomputer is the same as an EPROM cell; it is programmed by applying a high voltage between its control gate and drain to inject hot electrons into its floating gate. These electrons are stable, surrounded by an energy barrier formed by an SiO_2 film. The change in threshold voltage of a memory cell with a charged floating gate makes the corresponding bit appear as 0; a cell whose floating gate is not charged appears as a 1 bit (figure 98).

The charge in a memory cell may decrease with time. This decrease is usually due to one of the following causes:

- Ultraviolet light excites electrons, allowing them to escape. This effect is the basis of the erasure principle.
- Heat excites trapped electrons, allowing them to escape.
- High voltages between the control gate and drain may erase electrons.

If the oxide film covering a floating gate is defective, the electron erasure rate will be greater. However, electron erasure does not often occur because defective devices are detected and removed at the testing stage.

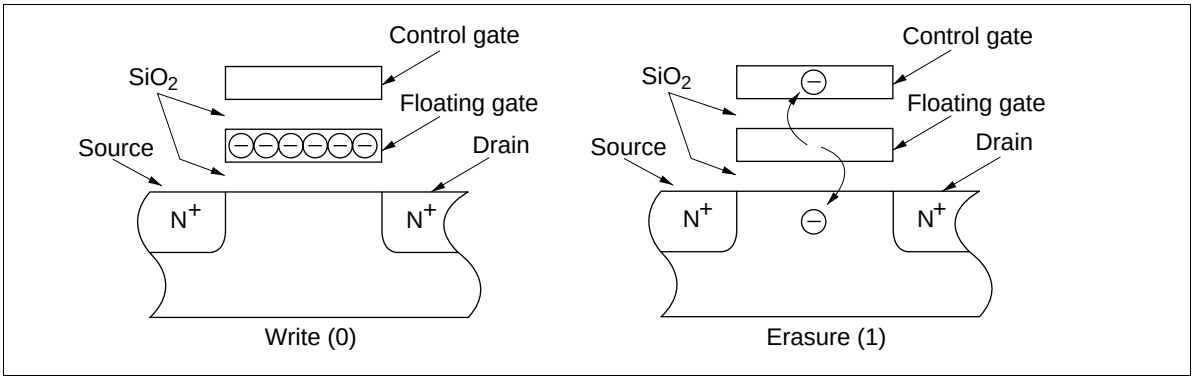

Figure 98 Cross-Sections of a PROM Cell

PROM Programming: PROM memory cells must be programmed under specific voltage and timing conditions. The higher the programming voltage V_{PP} and the longer the programming pulse t_{PW} is applied, the more electrons are injected into the floating gates. However, if V_{PP} exceeds specifications, the pn junctions may be permanently damaged. Pay particular attention to overshooting in the PROM programmer. In addition, note that negative voltage noise will produce a parasitic transistor effect that may reduce breakdown voltages.

The ZTAT™ microcomputer is electrically connected to the PROM programmer by a socket adapter. Therefore, note the following points:

- Check that the socket adapter is firmly mounted on the PROM programmer.
- Do not touch the socket adapter or the LSI
  during the programming. Touching them may affect the quality of the contacts, which will cause programming errors.

PROM Reliability after Programming: In general, semiconductor devices retain their reliability, provided that some initial defects can be excluded. These initial defects can be detected and rejected by screening. Baking devices under high-temperature conditions is one method of screening that can rapidly eliminate data-hold defects in memory cells. (Refer to the previous Principles of Programming/Erasure section.)

ZTAT™ microcomputer devices are extremely reliable because they have been subjected to such a screening method during the wafer fabrication process, but Hitachi recommends that each device be exposed to 150°C at one atmosphere for at least 48 hours after it is programmed, to ensure its best performance. The recommended screening procedure is shown in figure 99.

Note: If programming errors occur continuously during PROM programming, suspend programming and check for problems in the PROM programmer or socket adapter. If programming verification indicates errors in programming or after high-temperature exposure, please inform Hitachi.

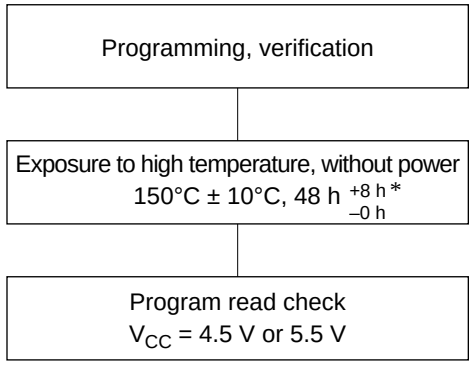

Note: * Exposure time is measured from when the temperature in the heater reaches 150°C.

Figure 99 Recommended Screening Procedure

Addressing Modes

RAM Addressing Modes

The MCU has three RAM addressing modes, as shown in figure 100 and described below.

Register Indirect Addressing Mode: The contents of the W, X, and Y registers (10 bits in total) are used as a RAM address.

Direct Addressing Mode: A direct addressing

instruction consists of two words. The first word contains the opcode, and the contents of the second word (10 bits) are used as a RAM address.

Memory Register Addressing Mode: The memory registers (MR), which are located in 16 addresses from $040 to $04F, are accessed with the LAMR and XMRA instructions.

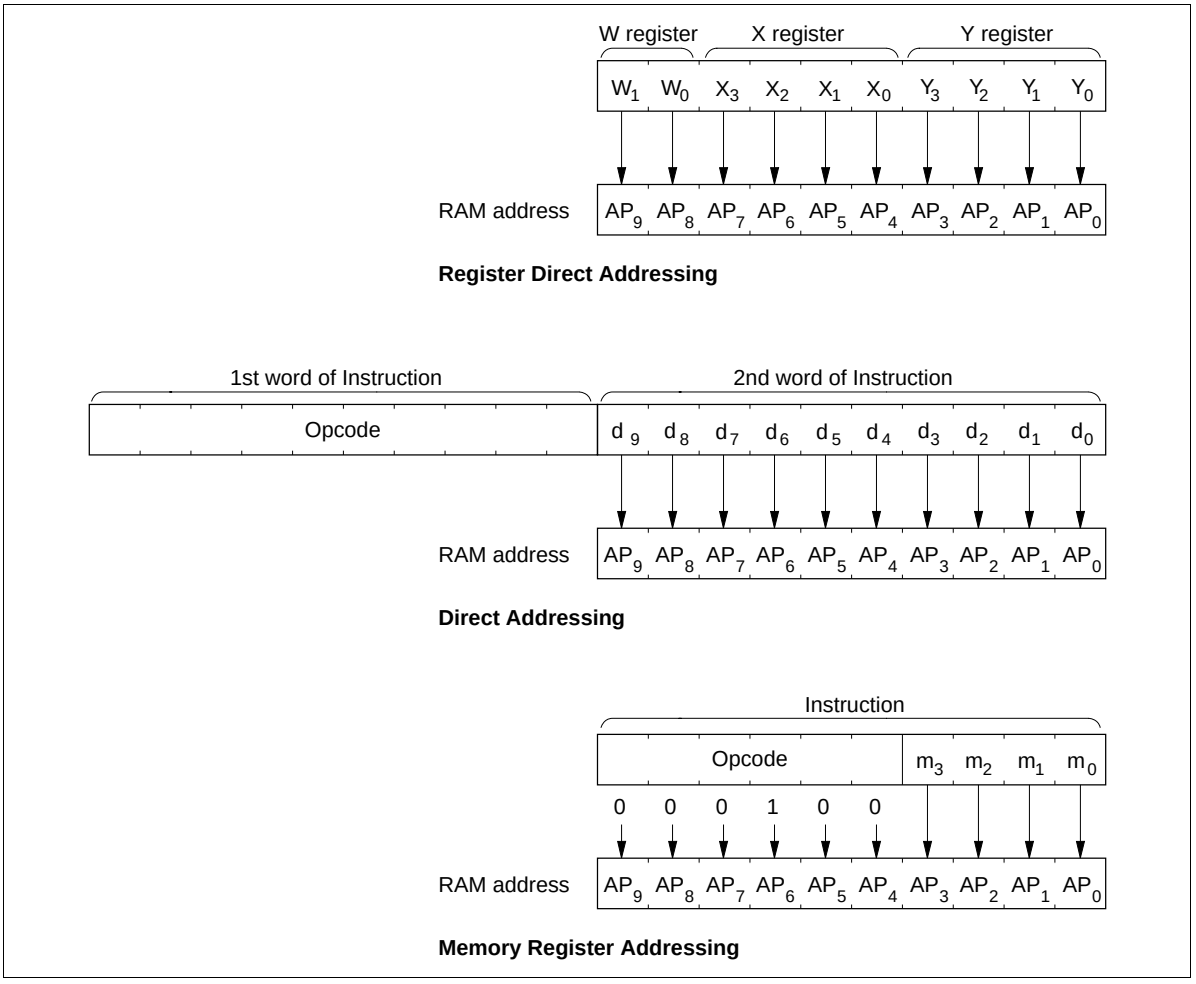

Figure 100 RAM Addressing Modes

ROM Addressing Modes and the P Instruction

The MCU has four ROM addressing modes, as shown in figure 101 and described below.

Direct Addressing Mode: A program can branch to any address in the ROM memory space by executing the JMPL, BRL, or CALL instruction. Each of these instructions replaces the 14 program counter bits (PC_{13}–PC_0) with 14-bit immediate data.

Current Page Addressing Mode: The MCU has 64 pages of ROM with 256 words per page. A program can branch to any address in the current page by executing the BR instruction. This instruction replaces the eight low-order bits of the program counter (PC_7–PC_0) with eight-bit immediate data. If the BR instruction is on a page boundary (address 256n + 255), executing that instruction transfers the PC contents to the next physical page, as shown in figure 98. This means that the execution of the BR instruction on a page boundary will make the program branch to the next page.

Note that the HMCS400-series cross macroassembler has an automatic paging feature for ROM pages.

Zero-Page Addressing Mode: A program can branch to the zero-page subroutine area located at $0000–$003F by executing the CAL instruction. When the CAL instruction is executed, 6 bits of immediate data are placed in the six low-order bits of the program counter (PC_5–PC_0), and 0s are placed in the eight high-order bits (PC_{13}–PC_6).

Table Data Addressing Mode: A program can branch to an address determined by the contents of four-bit immediate data, the accumulator, and the B register by executing the TBR instruction.

P Instruction: ROM data addressed in table data addressing mode can be referenced with the P instruction as shown in figure 102. If bit 8 of the ROM data is 1, eight bits of ROM data are written to the accumulator and the B register. If bit 9 is 1, eight bits of ROM data are written to the R1 and R2 port output registers. If both bits 8 and 9 are 1, ROM data is written to the accumulator and the B register, and also to the R1 and R2 port output registers at the same time.

The P instruction has no effect on the program counter.

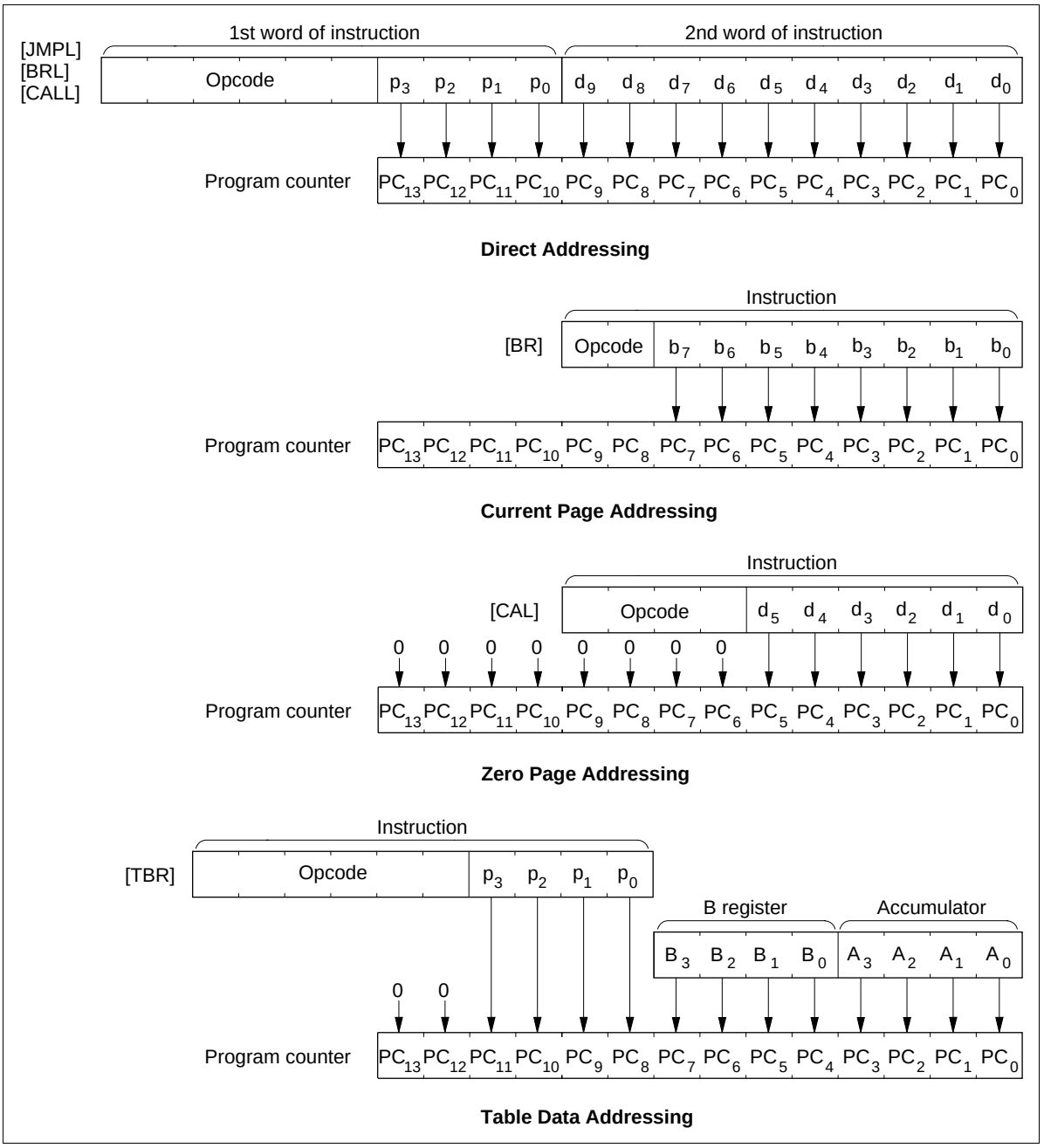

Figure 101 ROM Addressing Modes

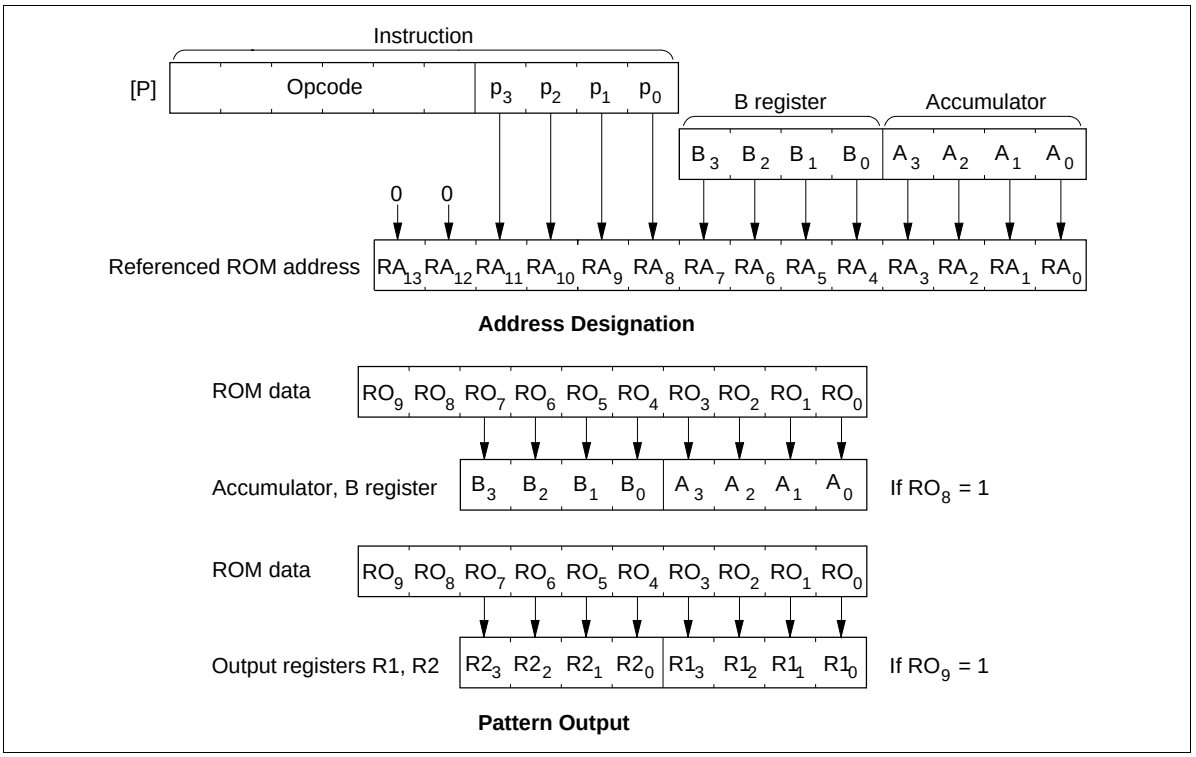

Figure 102 P Instruction

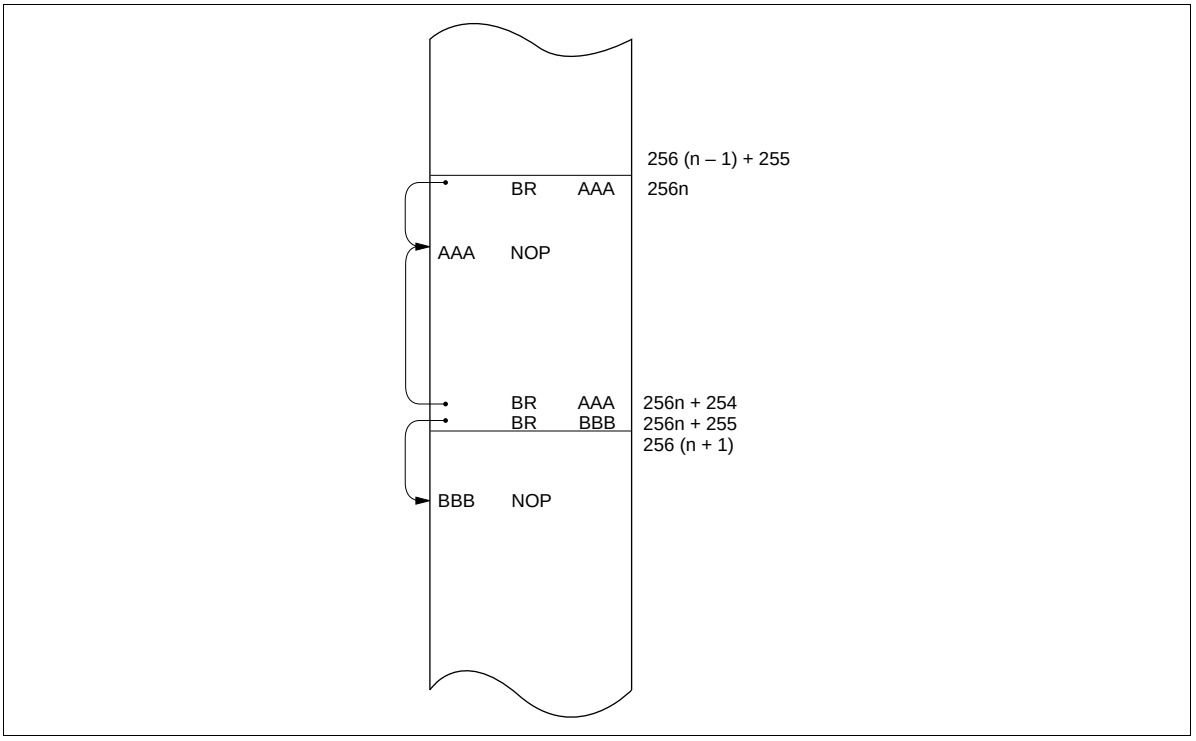

Figure 103 Branching when the Branch Destination is on a Page Boundary

Instruction Set

The MCU has 101 instructions, classified into the following 10 groups:

- Immediate instructions
- Register-to-register instructions
- RAM addressing instructions
- RAM register instructions
- Arithmetic instructions
- Compare instructions
- RAM bit manipulation instructions
- ROM addressing instructions
- Input/output instructions
- Control instructions

The functions of these instructions are listed in tables 27 to 36, and an opcode map is shown in table 37.

Table 27 Immediate Instructions

Operation	Mnemonic	Operation Code	Function	Status	Words/ Cycles
Load A from immediate	LAI i	1 0 0 0 1 1 i_3 i_2 i_1 i_0	i → A		1/1
Load B from immediate	LBI i	1 0 0 0 0 0 i_3 i_2 i_1 i_0	i → B		1/1
Load memory from immediate	LMID i,d	0 1 1 0 1 0 i_3 i_2 i_1 i_0 d_9 d_8 d_7 d_6 d_5 d_4 d_3 d_2 d_1 d_0	i → M		2/2
Load memory from immediate, increment Y	LMIIY i	1 0 1 0 0 1 i_3 i_2 i_1 i_0	i → M, Y + 1 → Y	NZ	1/1

Table 28 Register-Register Instructions

Operation	Mnemonic	Operation Code	Function	Status	Words/ Cycles
Load A from B	LAB	0 0 0 1 0 0 1 0 0 0	B → A		1/1
Load B from A	LBA	0 0 1 1 0 0 1 0 0 0	A → B		1/1
Load A from W	LAW*	0 1 0 0 0 0 0 0 0 0 0 0 0 0 0 0 0 0 0 0	W → A		2/2*
Load A from Y	LAY	0 0 1 0 1 0 1 1 1 1	Y → A		1/1
Load A from SPX	LASPX	0 0 0 1 1 0 1 0 0 0	SPX → A		1/1
Load A from SPY	LASPY	0 0 0 1 0 1 1 0 0 0	SPY → A		1/1
Load A from MR	LAMR m	1 0 0 1 1 1 m_3 m_2 m_1 m_0	MR (m) → A		1/1
Exchange MR and A	XMRA m	1 0 1 1 1 1 m_3 m_2 m_1 m_0	MR (m) ↔ A		1/1

Note: * Although the LAW and LWA instructions require an operand ($000) in the second word, the assembler generates it automatically and thus there is no need to specify it explicitly.

Table 29 RAM Address Instructions

Operation	Mnemonic	Operation Code										Function	Status	Words/ Cycles
Load W from immediate	LWI i	0	0	1	1	1	1	0	0	i_1	i_0	i → W		1/1
Load X from immediate	LXI i	1	0	0	0	1	0	i_3	i_2	i_1	i_0	i → X		1/1
Load Y from immediate	LYI i	1	0	0	0	0	1	i_3	i_2	i_1	i_0	i → Y		1/1
Load W from A	LWA	0 0	1 0	0 0	0 0	0 0	1 0	0 0	0 0	0 0	0 0	A → W		2/2*
Load X from A	LXA	0	0	1	1	1	0	1	0	0	0	A → X		1/1
Load Y from A	LYA	0	0	1	1	0	1	1	0	0	0	A → Y		1/1
Increment Y	IY	0	0	0	1	0	1	1	1	0	0	Y + 1 → Y	NZ	1/1
Decrement Y	DY	0	0	1	1	0	1	1	1	1	1	Y – 1 → Y	NB	1/1
Add A to Y	AYY	0	0	0	1	0	1	0	1	0	0	Y + A → Y	OVF	1/1
Subtract A from Y	SYY	0	0	1	1	0	1	0	1	0	0	Y – A → Y	NB	1/1
Exchange X and SPX	XSPX	0	0	0	0	0	0	0	0	0	1	X ↔ SPX		1/1
Exchange Y and SPY	XSPY	0	0	0	0	0	0	0	0	1	0	Y ↔ SPY		1/1
Exchange X and SPX, Y and SPY	XSPXY	0	0	0	0	0	0	0	0	1	1	X ↔ SPX, Y ↔ SPY		1/1

Note: * Although the LAW and LWA instructions require an operand ($000) in the second word, the assembler generates it automatically and thus there is no need to specify it explicitly.

Table 30 RAM Register Instructions

Operation	Mnemonic	Operation Code	Function	Status	Words/ Cycles
Load A from memory	LAM	0 0 1 0 0 1 0 0 0 0	M → A		1/1
	LAMX	0 0 1 0 0 1 0 0 0 1	M → A, X ↔ SPX		
	LAMY	0 0 1 0 0 1 0 0 1 0	M → A, Y ↔ SPY		
	LAMXY	0 0 1 0 0 1 0 0 1 1	M → A, X ↔ SPX, Y ↔ SPY		
Load A from memory	LAMD d	0 1 1 0 0 1 0 0 0 0 d_9 d_8 d_7 d_6 d_5 d_4 d_3 d_2 d_1 d_0	M → A		2/2
Load B from memory	LBM	0 0 0 1 0 0 0 0 0 0	M → B		1/1
	LBMX	0 0 0 1 0 0 0 0 0 1	M → B, X ↔ SPX		
	LBMY	0 0 0 1 0 0 0 0 1 0	M → B, Y ↔ SPY		
	LBMXY	0 0 0 1 0 0 0 0 1 1	M → B, X ↔ SPX, Y ↔ SPY		
Load memory from A	LMA	0 0 1 0 0 1 0 1 0 0	A → M		1/1
	LMAX	0 0 1 0 0 1 0 1 0 1	A → M, X ↔ SPX		
	LMAY	0 0 1 0 0 1 0 1 1 0	A → M, Y ↔ SPY		
	LMAXY	0 0 1 0 0 1 0 1 1 1	A → M, X ↔ SPX, Y ↔ SPY		
Load memory from A	LMAD d	0 1 1 0 0 1 0 0 0 0 d_9 d_8 d_7 d_6 d_5 d_4 d_3 d_2 d_1 d_0	A → M		2/2

Table 30 RAM Register Instructions (cont)

Operation	Mnemonic	Operation Code	Function	Status	Words/ Cycles
Load memory from A, increment Y	LMAIY	0 0 0 1 0 1 0 0 0 0	A → M, Y + 1 → Y	NZ	1/1
	LMAIYX	0 0 0 1 0 1 0 0 0 1	A → M, Y + 1 → Y, X ↔ SPX		
Load memory from A, decrement Y	LMADY	0 0 1 1 0 1 0 0 0 0	A → M, Y – 1 → Y	NB	1/1
	LMADYX	0 0 1 1 0 1 0 0 0 1	A → M, Y – 1 → Y, X ↔ SPX		
Exchange memory and A	XMA	0 0 1 0 0 0 0 0 0 0	M ↔ A		1/1
	XMAX	0 0 1 0 0 0 0 0 0 1	M ↔ A, X ↔ SPX		
	XMAY	0 0 1 0 0 0 0 0 1 0	M ↔ A, Y ↔ SPY		
	XMAXY	0 0 1 0 0 0 0 0 1 1	M ↔ A, X ↔ SPX, Y ↔ SPY		
Exchange memory and A	XMAD d	0 1 1 0 0 0 0 0 0 0 d_9 d_8 d_7 d_6 d_5 d_4 d_3 d_2 d_1 d_0	M → A		2/2
Exchange memory and B	XMB	0 0 1 1 0 0 0 0 0 0	M ↔ B		1/1
	XMBX	0 0 1 1 0 0 0 0 0 1	M ↔ B, X ↔ SPX		
	XMBY	0 0 1 1 0 0 0 0 1 0	M ↔ B, Y ↔ SPY		
	XMBXY	0 0 1 1 0 0 0 0 1 1	M ↔ B, X ↔ SPX, Y ↔ SPY		

Table 31 Arithmetic Instructions

Operation	Mnemonic	Operation Code	Function	Status	Words/ Cycles
Add immediate to A	AI i	1 0 1 0 0 0 i_3 i_2 i_1 i_0	A + i → A	OVF	1/1
Increment B	IB	0 0 0 1 0 0 1 1 0 0	B + 1 → B	NZ	1/1
Decrement B	DB	0 0 1 1 0 0 1 1 1 1	B – 1 → B	NB	1/1
Decimal adjust for addition	DAA	0 0 1 0 1 0 0 1 1 0			1/1
Decimal adjust for subtraction	DAS	0 0 1 0 1 0 1 0 1 0			1/1
Negate A	NEGA	0 0 0 1 1 0 0 0 0 0	$\overline{A}$ + 1 → A		1/1
Complement B	COMB	0 1 0 1 0 0 0 0 0 0	$\overline{B}$ → B		1/1
Rotate right A with carry	ROTR	0 0 1 0 1 0 0 0 0 0			1/1
Rotate left A with carry	ROTL	0 0 1 0 1 0 0 0 0 1			1/1
Set carry	SEC	0 0 1 1 1 0 1 1 1 1	1 → CA		1/1
Reset carry	REC	0 0 1 1 1 0 1 1 0 0	0 → CA		1/1
Test carry	TC	0 0 0 1 1 0 1 1 1 1		CA	1/1
Add A to memory	AM	0 0 0 0 0 0 1 0 0 0	M + A → A	OVF	1/1
Add A to memory	AMD d	0 1 0 0 0 0 1 0 0 0 d_9 d_8 d_7 d_6 d_5 d_4 d_3 d_2 d_1 d_0	M + A → A	OVF	2/2
Add A to memory with carry	AMC	0 0 0 0 0 1 1 0 0 0	M + A + CA → A OVF → CA	OVF	1/1
Add A to memory with carry	AMCD d	0 1 0 0 0 1 1 0 0 0 d_9 d_8 d_7 d_6 d_5 d_4 d_3 d_2 d_1 d_0	M + A + CA → A OVF → CA	OVF	2/2
Subtract A from memory with carry	SMC	0 0 1 0 0 1 1 0 0 0	M – A – $\overline{CA}$ → A NB → CA	NB	1/1
Subtract A from memory with carry	SMCD d	0 1 1 0 0 1 1 0 0 0 d_9 d_8 d_7 d_6 d_5 d_4 d_3 d_2 d_1 d_0	M – A – $\overline{CA}$ → A NB → CA	NB	2/2
OR A and B	OR	0 1 0 1 0 0 0 1 0 0	A ∪ B → A		1/1

Table 31 Arithmetic Instructions (cont)

Operation	Mnemonic	Operation Code	Function	Status	Words/ Cycles
AND memory with A	ANM	0 0 1 0 0 1 1 1 0 0	$A \cap M \rightarrow A$	NZ	1/1
AND memory with A	ANMD d	0 1 1 0 0 1 1 1 0 0 d_9 d_8 d_7 d_6 d_5 d_4 d_3 d_2 d_1 d_0	$A \cap M \rightarrow A$	NZ	2/2
OR memory with A	ORM	0 0 0 0 0 0 1 1 0 0	$A \cup M \rightarrow A$	NZ	1/1
OR memory with A	ORMD d	0 1 0 0 0 0 1 1 0 0 d_9 d_8 d_7 d_6 d_5 d_4 d_3 d_2 d_1 d_0	$A \cup M \rightarrow A$	NZ	2/2
EOR memory with A	EORM	0 0 0 0 0 1 1 1 0 0	$A \oplus M \rightarrow A$	NZ	1/1
EOR memory with A	EORMD d	0 1 0 0 0 1 1 1 0 0 d_9 d_8 d_7 d_6 d_5 d_4 d_3 d_2 d_1 d_0	$A \oplus M \rightarrow A$	NZ	2/2

Table 32 Compare Instructions

Operation	Mnemonic	Operation Code	Function	Status	Words/ Cycles
Immediate not equal to memory	INEM i	0 0 0 0 1 0 i_3 i_2 i_1 i_0	$i \neq M$	NZ	1/1
Immediate not equal to memory	INEMD i, d	0 1 0 0 1 0 i_3 i_2 i_1 i_0 d_9 d_8 d_7 d_6 d_5 d_4 d_3 d_2 d_1 d_0	$i \neq M$	NZ	2/2
A not equal to memory	ANEM	0 0 0 0 0 0 0 1 0 0	$A \neq M$	NZ	1/1
A not equal to memory	ANEMD d	0 1 0 0 0 0 0 1 0 0 d_9 d_8 d_7 d_6 d_5 d_4 d_3 d_2 d_1 d_0	$A \neq M$	NZ	2/2
B not equal to memory	BNEM	0 0 0 1 0 0 0 1 0 0	$B \neq M$	NZ	1/1
Y not equal to immediate	YNEI i	0 0 0 1 1 1 i_3 i_2 i_1 i_0	$Y \neq i$	NZ	1/1
Immediate less or equal to memory	ILEM i	0 0 0 0 1 1 i_3 i_2 i_1 i_0	$i \leq M$	NB	1/1
Immediate less or equal to memory	ILEMD i, d	0 1 0 0 1 1 i_3 i_2 i_1 i_0 d_9 d_8 d_7 d_6 d_5 d_4 d_3 d_2 d_1 d_0	$i \leq M$	NB	2/2
A less or equal to memory	ALEM	0 0 0 0 0 1 0 1 0 0	$A \leq M$	NB	1/1
A less or equal to memory	ALEMD d	0 1 0 0 0 1 0 1 0 0 d_9 d_8 d_7 d_6 d_5 d_4 d_3 d_2 d_1 d_0	$A \leq M$	NB	2/2
B less or equal to memory	BLEM	0 0 1 1 0 0 0 1 0 0	$B \leq M$	NB	1/1
A less or equal to immediate	ALEI i	1 0 1 0 1 1 i_3 i_2 i_1 i_0	$A \leq i$	NB	1/1

Table 33 RAM Bit Manipulation Instructions

Operation	Mnemonic	Operation Code	Function	Status	Words/ Cycles
Set memory bit	SEM n	0 0 1 0 0 0 0 1 n_1 n_0	i → M (n)		1/1
Set memory bit	SEMD n,d	0 1 1 0 0 0 0 1 n_1 n_0 d_9 d_8 d_7 d_6 d_5 d_4 d_3 d_2 d_1 d_0	i → M (n)		2/2
Reset memory bit	REM n	0 0 1 0 0 0 1 0 n_1 n_0	0 → M (n)		1/1
Reset memory bit	REMD n,d	0 1 1 0 0 0 1 0 n_1 n_0 d_9 d_8 d_7 d_6 d_5 d_4 d_3 d_2 d_1 d_0	0 → M (n)		2/2
Test memory bit	TM n	0 0 1 0 0 0 1 1 n_1 n_0		M (n)	1/1
Test memory bit	TM n,d	0 1 1 0 0 0 1 1 n_1 n_0 d_9 d_8 d_7 d_6 d_5 d_4 d_3 d_2 d_1 d_0		M (n)	2/2

Table 34 ROM Addressing Instructions

Operation	Mnemonic	Operation Code	Function	Status	Words/ Cycles
Branch on status 1	BR b	1 1 b_7 b_6 b_5 b_4 b_3 b_2 b_1 b_0		1	1/1
Long branch on status 1	BRL u	0 1 0 1 1 1 p_3 p_2 p_1 p_0 d_9 d_8 d_7 d_6 d_5 d_4 d_3 d_2 d_1 d_0		1	2/2
Long jump unconditionally	JMPL u	0 1 0 1 0 1 p_3 p_2 p_1 p_0 d_9 d_8 d_7 d_6 d_5 d_4 d_3 d_2 d_1 d_0			2/2
Subroutine jump on status 1	CAL a	0 1 1 1 a_5 a_4 a_3 a_2 a_1 a_0		1	1/2
Long subroutine jump on status 1	CALL u	0 1 0 1 1 0 p_3 p_2 p_1 p_0 d_9 d_8 d_7 d_6 d_5 d_4 d_3 d_2 d_1 d_0		1	2/2
Table branch	TBR p	0 0 1 0 1 1 p_3 p_2 p_1 p_0		1	1/1
Return from subroutine	RTN	0 0 0 0 0 1 0 0 0 0			1/3
Return from interrupt	RTNI	0 0 0 0 0 1 0 0 0 1	1 → IE, carry restored	ST	1/3

Table 35 Input/Output Instructions

Operation	Mnemonic	Operation Code	Function	Status	Words/ Cycles
Set discrete I/O latch	SED	0 0 1 1 1 0 0 1 0 0	1 → D (Y)		1/1
Set discrete I/O latch direct	SEDD m	1 0 1 1 1 0 m_3 m_2 m_1 m_0	1 → D (m)		1/1
Reset discrete I/O latch	RED	0 0 0 1 1 0 0 1 0 0	0 → D (Y)		1/1
Reset discrete I/O latch direct	REDD m	1 0 0 1 1 0 m_3 m_2 m_1 m_0	0 → D (m)		1/1
Test discrete I/O latch	TD	0 0 1 1 1 0 0 0 0 0		D (Y)	1/1
Test discrete I/O latch direct	TDD m	1 0 1 0 1 0 m_3 m_2 m_1 m_0		D (m)	1/1
Load A from R-port register	LAR m	1 0 0 1 0 1 m_3 m_2 m_1 m_0	R (m) → A		1/1
Load B from R-port register	LBR m	1 0 0 1 0 0 m_3 m_2 m_1 m_0	R (m) → B		1/1
Load R-port register from A	LRA m	1 0 1 1 0 1 m_3 m_2 m_1 m_0	A → R (m)		1/1
Load R-port register from B	LRB m	1 0 1 1 0 0 m_3 m_2 m_1 m_0	B → R (m)		1/1
Pattern generation	P p	0 1 1 0 1 1 p_3 p_2 p_1 p_0			1/2

Table 36 Control Instructions

Operation	Mnemonic	Operation Code	Function	Status	Words/ Cycles
No operation	NOP	0 0 0 0 0 0 0 0 0 0			1/1
Start serial	STS	0 1 0 1 0 0 1 0 0 0			1/1
Standby mode/Watch mode*	SBY	0 1 0 1 0 0 1 1 0 0			1/1
Stop mode/ Watch mode	STOP	0 1 0 1 0 0 1 1 0 1			1/1

Note: * Only on return from subactive mode.

Table 37 Opcode Map

R9	H \ L \ R8	0	1	2	3	4	5	6	7	8	9	A	B	C	D	E	F
		0															
0	0	NOP	XSPX	XSPY	XSPXY	ANEM				AM				ORM			
	1	RTN	RTNI			ALEM				AMC				EORM			
	2	INEM i(4)															
	3	ILEM i(4)															
	4	LBM(XY)				BNEM				LAB				IB			
	5	LMAIY(X)				AYY				LASPY				IY			
	6	NEGA				RED				LASPX							TC
	7	YNEI i(4)															
	8	XMA(XY)				SEM n(2)				REM n(2)				TM n(2)			
	9	LAM(XY)				LMA(XY)				SMC				ANM			
	A	ROTR	ROTL					DAA				DAS					LAY
	B	TBR p(4)															
	C	XMB(XY)				BLEM				LBA							DB
	D	LMADY(X)				SYY				LYA							DY
	E	TD				SED				LXA				REC			SEC
	F	LWI i(2)															
	0	LBI i(4)															
	1	LYI i(4)															
	2	LXI i(4)															
	3	LAI i(4)															
	4	LBR m(4)															
	5	LAR m(4)															
	6	REDD m(4)															
	7	LAMR m(4)															
1	8	AI i(4)															
	9	LMIIY i(4)															
	A	TDD m(4)															
	B	ALEI i(4)															
	C	LRB m(4)															
	D	LRA m(4)															
	E	SEDD m(4)															
	F	XMRA m(4)															

1-word/2-cycle instruction

1-word/3-cycle instruction

RAM direct address instruction (2-word/2-cycle)

2-word/2-cycle instruction

Table 37 Opcode Map (cont)

R9	R8 H \ L	0	1	2	3	4	5	6	7	8	9	A	B	C	D	E	F
		1															
0	0	LAW				ANEMD				AMD				ORMD			
	1	LWA				ALEMD				AMCD				EORMD			
	2	INEMD i(4)															
	3	ILEMD i(4)															
	4	COMB				OR				STS				SBY	STOP		
	5	JMPL p(4)															
	6	CALL p(4)															
	7	BRL p(4)															
	8	XMAD				SEMD n(2)				REMD n(2)				TMD n(2)			
	9	LAMD				LMAD				SMCD				ANMD			
	A	LMID i(4)															
	B	P p(4)															
	C	CAL a(6)															
	D																
	E																
	F																
1	0	BR b(8)															
	1																
	2																
	3																
	4																
	5																
	6																
	7																
	8																
	9																
	A																
	B																
	C																
	D																
	E																
	F																

1-word/2-cycle instruction

1-word/3-cycle instruction

RAM direct address instruction (2-word/2-cycle)

2-word/2-cycle instruction

Absolute Maximum Ratings

Item	Symbol	Value	Unit	Notes
Supply voltage	V_{CC}	–0.3 to +7.0	V	
Programming voltage	V_{PP}	–0.3 to +14.0	V	1
Pin voltage	V_T	–0.3 to V_{CC} + 0.3	V	
Total permissible input current	ΣI_o	100	mA	2
Total permissible output current	$-\Sigma I_o$	50	mA	3
Maximum input current	I_o	4	mA	4, 5
		30	mA	4, 6
Maximum output current	$-I_o$	4	mA	7, 8
Operating temperature	T_{opr}	–20 to +75	°C	
Storage temperature	T_{stg}	–55 to +125	°C	

Notes: Permanent damage may occur if these absolute maximum ratings are exceeded. Normal operation must be under the conditions stated in the electrical characteristics tables. If these conditions are exceeded, the LSI may malfunction or its reliability may be affected.

1. Applies to D_{11} (V_{PP}) of the HD4074829.
2. The total permissible input current is the total of input currents simultaneously flowing in from all the I/O pins to ground.
3. The total permissible output current is the total of output currents simultaneously flowing out from V_{CC} to all I/O pins.
4. The maximum input current is the maximum current flowing from each I/O pin to ground.
5. Applies to R0–R7.
6. Applies to D_0–D_9.
7. The maximum output current is the maximum current flowing out from V_{CC} to each I/O pin.
8. Applies to D_0–D_9 and R0–R7.

Electrical Characteristics

DC Characteristics (HD404828R, HD4048212R, HD404829R: V_{CC} = 2.7 to 6.0 V, GND = 0 V, T_a = –20°C to +75°C; HD4074829: V_{CC} = 2.7 to 5.5 V, GND = 0 V, T_a = –20°C to +75°C, unless otherwise specified)

Item	Symbol	Pin(s)	Min	Typ	Max	Unit	Test Condition	Notes
Input high voltage	V_{IH}	RESET, $\overline{SCK}$, SI, $\overline{INT_0}$, $\overline{INT_1}$ INT_2, INT_3, INT_4, $\overline{STOPC}$, $\overline{EVNB}$, EVND	$0.9V_{CC}$	—	V_{CC} + 0.3	V	—	
		OSC_1	V_{CC} – 0.3	—	V_{CC} + 0.3	V	External clock operation	
Input low voltage	V_{IL}	RESET, $\overline{SCK}$, SI, $\overline{INT_0}$, $\overline{INT_1}$, INT_2, INT_3, INT_4, $\overline{STOPC}$, $\overline{EVNB}$, EVND	–0.3	—	$0.1V_{CC}$	V	—	
		OSC_1	–0.3	—	0.3	V	External clock operation	
Output high voltage	V_{OH}	$\overline{SCK}$, SO, TOB, TOC, TOD	V_{CC} – 1.0	—	—	V	$–I_{OH}$ = 0.5 mA	
Output low voltage	V_{OL}	$\overline{SCK}$, SO, TOB, TOC, TOD	—	—	0.4	V	I_{OL} = 0.4 mA	
I/O leakage current	$\lvert I_{IL} \rvert$	RESET, $\overline{SCK}$, SI, $\overline{INT_0}$, $\overline{INT_1}$, INT_2, INT_3, INT_4, $\overline{STOPC}$, $\overline{EVNB}$, EVND, OSC_1, TOB, TOC, TOD, SO	—	—	1.0	µA	V_{in} = 0 V to V_{CC}	1
Current dissipation in active mode	I_{CC1}	V_{CC} (HD404828R, HD4048212R, HD404829R)	—	2.5	5.0	mA	V_{CC} = 5.0 V, f_{OSC} = 4 MHz	2
		V_{CC} (HD4074829)	—	5	9			
	I_{CC2}	V_{CC} (HD404828R, HD4048212R, HD404829R)	—	0.3	0.9	mA	V_{CC} = 3.0 V, f_{OSC} = 800 kHz	2
		V_{CC} (HD4074829)	—	0.6	1.8			
Current dissipation in standby mode	I_{SBY1}	V_{CC} (HD404828R, HD4048212R, HD404829R)	—	1.0	2.0	mA	V_{CC} = 5.0 V, f_{OSC} = 4 MHz, LCD on	3
		V_{CC} (HD4074829)	—	1.2	3			
	I_{SBY2}	V_{CC}	—	0.2	0.7	mA	V_{CC} = 3.0 V, f_{OSC} = 800 kHz, LCD on	3

Notes on next page.

Item	Symbol	Pin(s)	Min	Typ	Max	Unit	Test Condition	Notes
Current dissipation in subactive mode	I_{SUB}	V_{CC} (HD404828R, HD4048212R, HD404829R)	—	25	70	µA	V_{CC} = 3.0 V, LCD on 32-kHz oscillator	4
		V_{CC} (HD4074829)	—	70	150	µA	V_{CC} = 3.0 V, LCD on 32-kHz oscillator	4
Current dissipation in watch mode	I_{WTC1}	V_{CC} (HD404828R, HD4048212R, HD404829R)	—	15	40	µA	V_{CC} = 3.0 V, LCD on 32-kHz oscillator	4
		V_{CC} (HD4074829)	—	18	40			
	I_{WTC2}	V_{CC} (HD404828R, HD4048212R, HD404829R)	—	5	10	µA	V_{CC} = 3.0 V, LCD off 32-kHz oscillator	4
		V_{CC} (HD4074829)	—	8	15			
Current dissipation in stop mode	I_{STOP}	V_{CC} (HD404828R, HD4048212R, HD404829R)	—	0.5	5	µA	V_{CC} = 3.0 V, No 32-kHz oscillator	4
		V_{CC} (HD4074829)	—	1	10			
Stop mode retaining voltage	V_{STOP}	V_{CC}	2	—	—	V	No 32-kHz oscillator	5

Notes: 1. Output buffer current is excluded.

2. I_{CC1} and I_{CC2} are the source currents when no I/O current is flowing while the MCU is in reset state.
   Test conditions: MCU: Reset
   Pins: $\overline{\text{RESET}}$ at V_{CC} (V_{CC} – 0.3 V to V_{CC})
   $\overline{\text{TEST}}$ at V_{CC} (V_{CC} – 0.3 V to V_{CC})

3. I_{SBY1} and I_{SBY2} are the source currents when no I/O current is flowing while the MCU timer is operating.
   Test conditions: MCU: I/O reset
   Serial interface stopped
   Standby mode
   Pins: $\overline{\text{RESET}}$ at GND (0 V to 0.3 V)
   $\overline{\text{TEST}}$ at V_{CC} (V_{CC} – 0.3 V to V_{CC})

4. These are the source currents when no I/O current is flowing.
   Test conditions: Pins: $\overline{\text{RESET}}$ at GND (0 V to 0.3 V)
   $\overline{\text{TEST}}$ at V_{CC} (V_{CC} – 0.3 V to V_{CC})
   D_{11} (V_{PP}) at V_{CC} (V_{CC} – 0.3 V to V_{CC}) for the HD4074829

5. The required voltage for RAM data retention.

I/O Characteristics for Standard Pins (HD404828R, HD4048212R, HD404829R: V_{CC} = 2.7 to 6.0 V, GND = 0 V, T_a = –20°C to +75°C; HD4074829: V_{CC} = 2.7 to 5.5 V, GND = 0 V, T_a = –20°C to +75°C, unless otherwise specified)

Item	Symbol	Pin(s)	Min	Typ	Max	Unit	Test Condition	Notes
Input high voltage	V_{IH}	D_{10}, D_{11}, R0–R7	$0.7V_{CC}$	—	V_{CC} + 0.3	V	—	
Input low voltage	V_{IL}	D_{10}, D_{11}, R0–R7	–0.3	—	$0.3V_{CC}$	V	—	
Output high voltage	V_{OH}	R0–R7	V_{CC} – 1.0	—	—	V	$–I_{OH}$ = 0.5 mA	
Output low voltage	V_{OL}	R0–R7	—	—	0.4	V	I_{OL} = 0.4 mA	
I/O leakage current	$\lvert I_{IL} \rvert$	D_{10}, R0–R7	—	—	1	µA	V_{in} = 0 V to V_{CC}	1
		D_{11} (HD404828R, HD4048212R, HD404829R)	—	—	1	µA	V_{in} = 0 V to V_{CC}	1
		D_{11} (HD4074829)	—	—	1	µA	V_{in} = V_{CC} – 0.3 V to V_{CC}	1
			—	—	20	µA	V_{in} = 0 V to 0.3 V	1
Pull-up MOS current	$–I_{PU}$	R0–R7	5	30	90	µA	V_{CC} = 3.0 V, V_{in} = 0 V	

Note: 1. Output buffer current is excluded.

I/O Characteristics for High-Current Pins (HD404828R, HD4048212R, HD404829R: V_{CC} = 2.7 to 6.0 V, GND = 0 V, T_a = –20°C to +75°C; HD4074829: V_{CC} = 2.7 to 5.5 V, GND = 0 V, Ta = –20°C to +75°C, unless otherwise specified)

Item	Symbol	Pin(s)	Min	Typ	Max	Unit	Test Condition	Notes
Input high voltage	V_{IH}	D_0–D_9	$0.7V_{CC}$	—	V_{CC} + 0.3	V	—	
Input low voltage	V_{IL}	D_0–D_9	–0.3	—	$0.3V_{CC}$	V	—	
Output high voltage	V_{OH}	D_0–D_9	V_{CC} – 1.0	—	—	V	$–I_{OH}$ = 0.5 mA	
Output low voltage	V_{OL}	D_0–D_9	—	—	0.4	V	I_{OL} = 0.4 mA	
			—	—	2.0	V	I_{OL} = 15 mA, V_{CC} = 4.5 V to 6.0 V	1
I/O leakage current	$\lvert I_{IL} \rvert$	D_0–D_9	—	—	1	µA	V_{in} = 0 V to V_{CC}	2
Pull-up MOS current	$–I_{PU}$	D_0–D_9	5	30	90	µA	V_{CC} = 3 V, V_{in} = 0 V	

Note: 1. The test condition of HD4074829 is V_{CC} = 4.5 V to 5.5 V.
2. Output buffer current is excluded.

LCD Circuit Characteristics (HD404828R, HD4048212R, HD404829R: V_{CC} = 2.7 to 6.0 V, GND = 0 V, T_a = –20°C to +75°C; HD4074829: V_{CC} = 2.7 to 5.5 V, GND = 0 V, T_a = –20°C to +75°C, unless otherwise specified)

Item	Symbol	Pin(s)	Min	Typ	Max	Unit	Test Condition	Notes
Segment driver voltage drop	V_{DS}	SEG1–SEG52	—	—	0.6	V	I_{PD} = 3 µA	1
Common driver voltage drop	V_{DC}	COM1–COM4	—	—	0.3	V	I_{PD} = 3 µA	1
LCD power supply division resistance	R_W	— (HD404828R, HD4048212R, HD404829R)	50	300	900	kΩ	Between V_1 and GND	
		— (HD4074829)	100	300	900	kΩ	—	
LCD voltage	V_{LCD}	V_1	2.7	—	V_{CC}	V	—	2

Notes: 1. V_{DS} and V_{DC} are the voltage drops from power supply pins V_1, V_2, V_3, and GND to each segment pin and each common pin, respectively.

2. When V_{LCD} is supplied from an external source, the following relations must be retained: $V_{CC} \geq V_1 \geq V_2 \geq V_3 \geq$ GND

A/D Converter Characteristics (HD404828R, HD4048212R, HD404829R: V_{CC} = 2.7 to 6.0 V, GND = 0 V, T_a = –20°C to +75°C; HD4074829: V_{CC} = 2.7 to 5.5 V, GND = 0 V, T_a = –20°C to +75°C, unless otherwise specified)

Item	Symbol	Pin(s)	Min	Typ	Max	Unit	Test Condition	Notes
Analog power voltage	AV_{CC}	AV_{CC}	V_{CC} – 0.3	V_{CC}	V_{CC} + 0.3	V	—	1
Analog input voltage	AV_{in}	AN_0–AN_3	AV_{SS}	—	AV_{CC}	V	—	
Current between AV_{CC} and AV_{SS}	I_{AD}	— (HD404828R, HD4048212R, HD404829R)	—	—	250	µA	V_{CC} = AV_{CC} = 5.0 V	
		— (HD4074829)	—	50	150			
Analog input capacitance	CA_{in}	AN_0–AN_3	—	15	—	pF	—	
Resolution	—	—	8	8	8	Bit	—	
Number of inputs	—	—	0	—	4	Chan-nel	—	
Absolute accuracy	—	—	—	—	± 2.0	LSB	T_a = 25°C, V_{CC} = 4.5–5.5 V	
Conversion time	—	—	34	—	67	t_{cyc}	—	
Input impedance	—	AN_0–AN_3	1	—	—	MΩ	f_{OSC} = 1 MHz, V_{in} = 0.0 V	

AC Characteristics (HD404828R, HD4048212R, HD404829R: V_{CC} = 2.7 to 6.0 V, GND = 0 V, T_a = –20°C to +75°C, unless otherwise specified)

Item	Symbol	Pin(s)	Min	Typ	Max	Unit	Test Condition	Notes
Clock oscillation frequency	f_{OSC}	OSC_1, OSC_2	0.4	—	4.2	MHz	1/4 division V_{CC}=3.0V-6.0V	
			0.4	—	2.0	MHz	1/4 division V_{CC}=2.7V-6.0V	1
		X1, X2	—	32.768	—	kHz	—	
Instruction cycle time	t_{cyc}	—	0.95	—	10	µs	V_{CC}=3.0V-6.0V	
			2	—	10	µs	V_{CC}=2.7V-6.0V	1
	t_{subcyc}	—	—	244.14	—	µs	32-kHz oscillator, 1/8 division	
			—	122.07	—	µs	32-kHz oscillator, 1/4 division	
Oscillation stabilization time	t_{RC}	OSC_1, OSC_2	—	—	7.5	ms	Ceramic oscillator	2
		OSC_1, OSC_2	—	—	30	ms	Crystal oscillator V_{CC}=3.0V-6.0V	2
		X1, X2	—	—	3	s	T_a = –10°C to +60°C	2
External clock high width	t_{CPH}	OSC_1	100	—	—	ns	V_{CC}=3.0V-6.0V	3
			215	—	—	ns	V_{CC}=2.7V-6.0V	3
External clock low width	t_{CPL}	OSC_1	100	—	—	ns	V_{CC}=3.0V-6.0V	3
			215	—	—	ns	V_{CC}=2.7V-6.0V	3
External clock rise time	t_{CPr}	OSC_1	—	—	20	ns	V_{CC}=3.0V-6.0V	3
			—	—	35	ns	V_{CC}=2.7V-6.0V	3
External clock fall time	t_{CPf}	OSC_1	—	—	20	ns	V_{CC}=3.0V-6.0V	3
			—	—	35	ns	V_{CC}=2.7V-6.0V	3
$\overline{INT}_0$–INT_4, $\overline{EVNB}$, EVND high widths	t_{IH}	$\overline{INT}_0$–INT_4, $\overline{EVNB}$, EVND	2	—	—	t_{cyc}/ t_{subcyc}	—	4
$\overline{INT}_0$–INT_4, $\overline{EVNB}$, EVND low widths	t_{IL}	$\overline{INT}_0$–INT_4, $\overline{EVNB}$, EVND	2	—	—	t_{cyc}/ t_{subcyc}	—	4
RESET high width	t_{RSTH}	RESET	2	—	—	t_{cyc}	—	5
$\overline{STOPC}$ low width	t_{STPL}	$\overline{STOPC}$	1	—	—	t_{RC}	—	6
RESET fall time	t_{RSTf}	RESET	—	—	20	ms	—	5
$\overline{STOPC}$ rise time	t_{STPr}	$\overline{STOPC}$	—	—	20	ms	—	6
Input capacitance	C_{in}	All pins except D_{11}	—	—	15	pF	f = 1 MHz V_{in} = 0 V,	

Notes on next page.

Notes: 1. With a crystal oscillator, V_{cc}=3.0V to 6.0V.

2. There are three oscillator stabilization times.
   (1) At power on, the time between the point where V_{cc} reaches 2.7V and the point where oscillation has stabilized.
   (2) At clearing stop mode, the time between the point where the RESET pin reaches the high level and the point where oscillation has stabilized.
   (3) At clearing stop mode, the time between the point where the $\overline{\text{STOPC}}$ pin reaches the low level and the point where oscillation has stabilized.
   At power on or when stop mode is cleared, RESET or $\overline{\text{STOPC}}$ must be input for at least t_{RC} to ensure the oscillation stabilization time.
   Since the oscillator stabilization time will depend on circuit constants and stray capacitances, determine the oscillator by consulting with the oscillator's manufacturer.
   Be sure to set miscellaneous register (MIS) bits MIS1 and MIS0 to match the system clock oscillator stabilization time.

3. Refer to figure 99.

4. Refer to figure 100. The t_{cyc} unit applies when the MCU is in standby or active mode.
   The t_{subcyc} unit applies when the MCU is in watch or subactive mode.

5. Refer to figure 101.

6. Refer to figure 102.

AC Characteristics (HD4074829: V_{CC} = 2.7 to 5.5 V, GND = 0 V, T_a = –20°C to +75°C, unless otherwise specified)

Item	Symbol	Pin(s)	Min	Typ	Max	Unit	Test Condition	Notes
Clock oscillation frequency	f_{OSC}	OSC_1, OSC_2	0.4	—	4.2	MHz	1/4 division V_{CC}=4.5V-5.5V	
			0.4	—	4.0	MHz	1/4 division V_{CC}=3.5V-5.5V	
			0.4	—	2.0	MHz	1/4 division V_{CC}=2.7V-5.5V	1
		X1, X2	—	32.768	—	kHz	—	
Instruction cycle time	t_{cyc}	—	0.95	—	10	µs	V_{CC}=4.5V-5.5V	
			1	—	10	µs	V_{CC}=3.5V-5.5V	
			2	—	10	µs	V_{CC}=2.7V-5.5V	1
	t_{subcyc}	—	—	244.14	—	µs	32-kHz oscillator, 1/8 division	
			—	122.07	—	µs	32-kHz oscillator, 1/4 division	
Oscillation stabilization time	t_{RC}	OSC_1, OSC_2	—	—	7.5	ms	Ceramic oscillator	2
		OSC_1, OSC_2	—	—	30	ms	Crystal oscillator V_{CC}=3.0V-5.5V	2
		X1, X2	—	—	3	s	T_a = –10°C to+60°C	2
External clock high width	t_{CPH}	OSC_1	100	—	—	ns	V_{CC}=4.5V-5.5V	3
			105	—	—	ns	V_{CC}=3.5V-5.5V	3
			215	—	—	ns	V_{CC}=2.7V-5.5V	3
External clock low width	t_{CPL}	OSC_1	100	—	—	ns	V_{CC}=4.5V-5.5V	3
			105	—	—	ns	V_{CC}=3.5V-5.5V	3
			215	—	—	ns	V_{CC}=2.7V-5.5V	3
External clock rise time	t_{CPr}	OSC_1	—	—	20	ns	V_{CC}=3.5V-5.5V	3
			—	—	35	ns	V_{CC}=2.7V-5.5V	3
External clock fall time	t_{CPf}	OSC_1	—	—	20	ns	V_{CC}=3.5V-5.5V	3
			—	—	35	ns	V_{CC}=2.7V-5.5V	3
$\overline{INT}_0$–INT_4, $\overline{EVNB}$, EVND high widths	t_{IH}	$\overline{INT}_0$–INT_4, $\overline{EVNB}$, EVND	2	—	—	t_{cyc}/ t_{subcyc}	—	4
$\overline{INT}_0$–INT_4, $\overline{EVNB}$, EVND low widths	t_{IL}	$\overline{INT}_0$–INT_4, $\overline{EVNB}$, EVND	2	—	—	t_{cyc}/ t_{subcyc}	—	4
RESET high width	t_{RSTH}	RESET	2	—	—	t_{cyc}	—	5
$\overline{STOPC}$ low width	t_{STPL}	$\overline{STOPC}$	1	—	—	t_{RC}	—	6
RESET fall time	t_{RSTf}	RESET	—	—	20	ms	—	5
$\overline{STOPC}$ rise time	t_{STPr}	$\overline{STOPC}$	—	—	20	ms	—	6
Input capacitance	C_{in}	All pins except D_{11}	—	—	15	pF	f = 1 MHz, V_{in} = 0 V	
		D_{11}	—	—	180	pF	f = 1 MHz, V_{in} = 0 V	

Notes on next page.

Notes: 1. With a crystal oscillator, V_{CC}=3.0V to 5.5V.

2. There are three oscillator stabilization times.
   (1) At power on, the time between the point where V_{CC} reaches 2.7V and the point where oscillation has stabilized.
   (2) At clearing stop mode, the time between the point where the RESET pin reaches the high level and the point where oscillation has stabilized.
   (3) At clearing stop mode, the time between the point where the $\overline{\text{STOPC}}$ pin reaches the low level and the point where oscillation has stabilized.
   At power on or when stop mode is cleared, RESET or $\overline{\text{STOPC}}$ must be input for at least t_{RC} to ensure the oscillation stabilization time.
   Since the oscillator stabilization time will depend on circuit constants and stray capacitances, determine the oscillator by consulting with the oscillator's manufacturer.
   Be sure to set miscellaneous register (MIS) bits MIS1 and MIS0 to match the system clock oscillator stabilization time.

3. Refer to figure 99.

4. Refer to figure 100. The t_{cyc} unit applies when the MCU is in standby or active mode.
   The t_{subcyc} unit applies when the MCU is in watch or subactive mode.

5. Refer to figure 101.

6. Refer to figure 102.

Serial Interface Timing Characteristics (HD404828R, HD4048212R, HD404829R: V_{CC} = 2.7 to 6.0 V, GND = 0 V, T_a = –20°C to +75°C; HD4074829: V_{CC} = 2.7 to 5.5 V, GND = 0 V, T_a = –20°C to +75°C, unless otherwise specified)

During Transmit Clock Output

Item	Symbol	Pin	Min	Typ	Max	Unit	Test Condition	Notes
Transmit clock cycle time	t_{Scyc}	$\overline{SCK}$	1.0	—	—	t_{cyc}	Load shown in figure 104	1
Transmit clock high width	t_{SCKH}	$\overline{SCK}$	0.5	—	—	t_{Scyc}	Load shown in figure 104	1
Transmit clock low width	t_{SCKL}	$\overline{SCK}$	0.5	—	—	t_{Scyc}	Load shown in figure 104	1
Transmit clock rise time	t_{SCKr}	$\overline{SCK}$	—	—	200	ns	Load shown in figure 104	1
Transmit clock fall time	t_{SCKf}	$\overline{SCK}$	—	—	200	ns	Load shown in figure 104	1
Serial output data delay time	t_{DSO}	SO	—	—	500	ns	Load shown in figure 104	1
Serial input data setup time	t_{SSI}	SI	300	—	—	ns	—	1
Serial input data hold time	t_{HSI}	SI	300	—	—	ns	—	1

Note: 1. Refer to figure 103.

During Transmit Clock Input

Item	Symbol	Pin	Min	Typ	Max	Unit	Test Condition	Notes
Transmit clock cycle time	t_{Scyc}	$\overline{SCK}$	1.0	—	—	t_{cyc}	—	1
Transmit clock high width	t_{SCKH}	$\overline{SCK}$	0.5	—	—	t_{Scyc}	—	1
Transmit clock low width	t_{SCKL}	$\overline{SCK}$	0.5	—	—	t_{Scyc}	—	1
Transmit clock rise time	t_{SCKr}	$\overline{SCK}$	—	—	200	ns	—	1
Transmit clock fall time	t_{SCKf}	$\overline{SCK}$	—	—	200	ns	—	1
Serial output data delay time	t_{DSO}	SO	—	—	500	ns	Load shown in figure 104	1
Serial input data setup time	t_{SSI}	SI	300	—	—	ns	—	1
Serial input data hold time	t_{HSI}	SI	300	—	—	ns	—	1

Note: 1. Refer to figure 103.

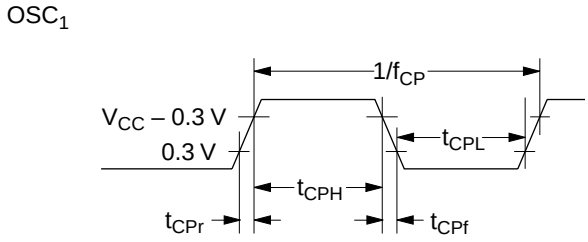

Figure 104 External Clock Timing

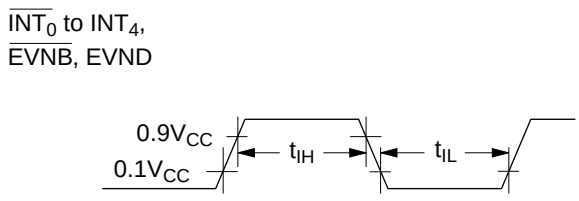

Figure 105 Interrupt Timing

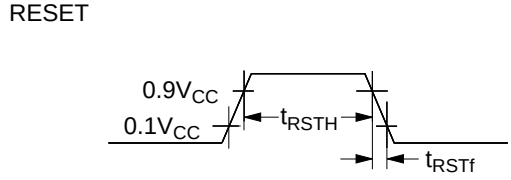

Figure 106 Reset Timing

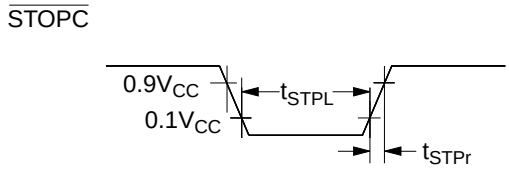

Figure 107 STOPC Timing

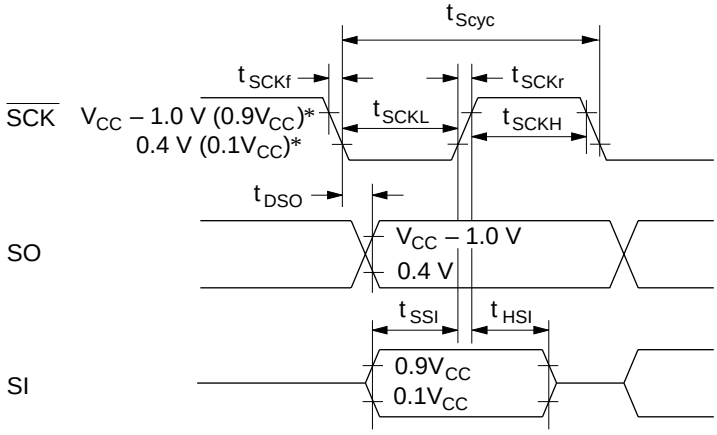

Note: * V_{CC} – 1.0 V and 0.4 V are the threshold voltages for transmit clock output, and $0.9V_{CC}$ and $0.1V_{CC}$ are the threshold voltages for transmit clock input.

Figure 108 Serial Interface Timing

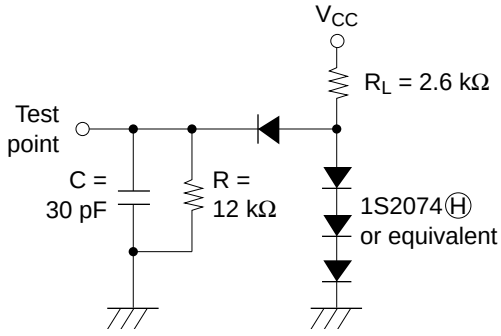

Figure 109 Timing Load Circuit

Notes on ROM Out

Please pay attention to the following items regarding ROM out.

On ROM out, fill the ROM area indicated below with 1s to create the same data size as a 16-kword version (HD404829R). A 16-kword data size is required to change ROM data to mask manufacturing data since the program used is for a 16-kword version.

This limitation applies when using an EPROM or a data base.

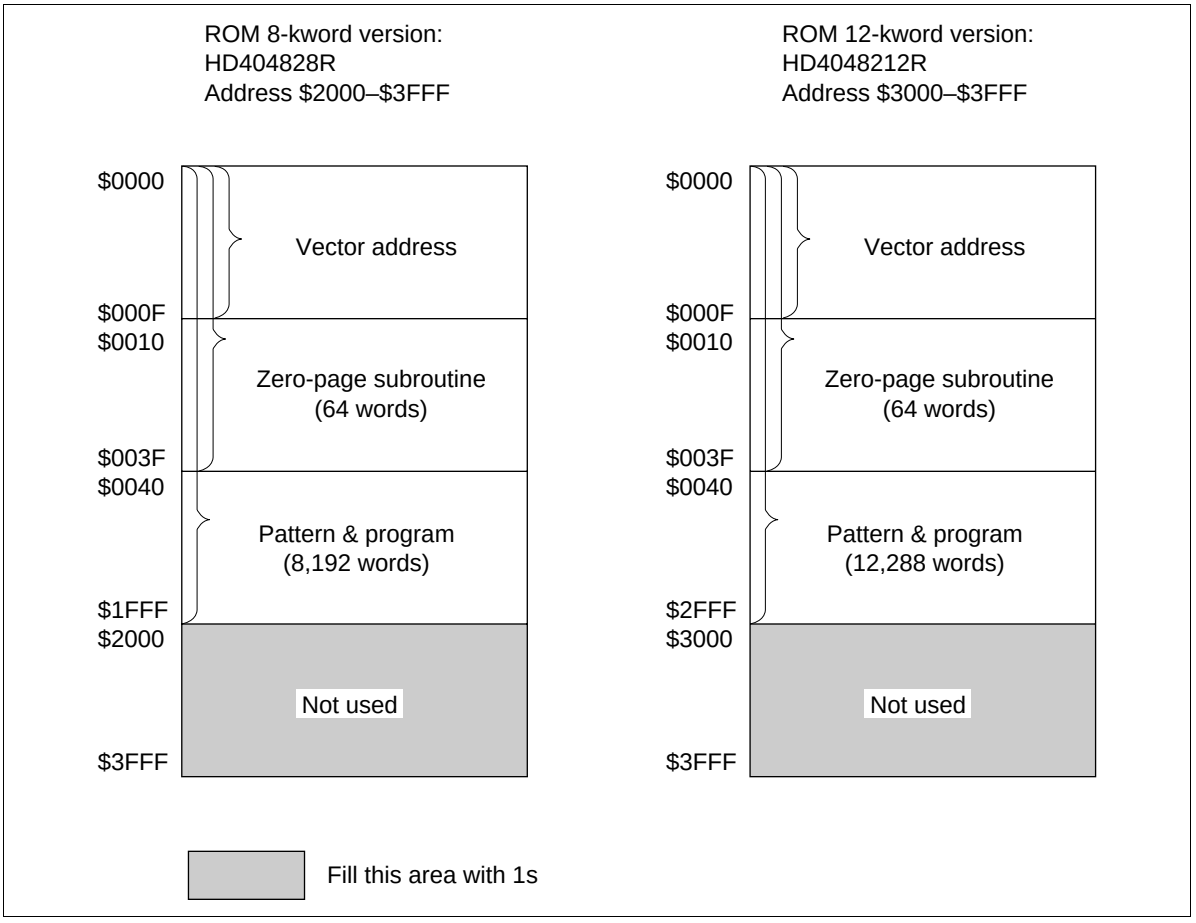

HD404829R/HD404828R/HD4048212R Option List

Please check off the appropriate applications and enter the necessary information.

Date of order	/ /
Customer	
Department	
Name	
ROM code name	
LSI number (Hitachi entry)	

1. ROM Size

☐	HD404828R	8-kword
☐	HD4048212R	12-kword
☐	HD404829R	16-kword

2. Optional Function

*	☐	With 32-kHz CPU operation, with time-base for clock
*	☐	Without 32-kHz CPU operation, with time-base for clock
	☐	Without 32-kHz CPU operation, without time-base for clock

Note: * Options marked with an asterisk require a subsystem crystal oscillator (X1, X2).

3. ROM Code Data Type

Please specify the first type below (the upper bits and lower bits are mixed together), when using the EPROM on-package microcomputer type (including ZTAT™ version).

☐	The upper bits and lower bits are mixed together. The upper five bits and lower five bits are programmed to the same EPROM in alternating order (i.e., LULULU...).
☐	The upper bits and lower bits are separated. The upper five bits and lower five bits are programmed to different EPROMs.

4. System Oscillator (OSC1 and OSC2)

☐	Ceramic oscillator	f =	MHz
☐	Crystal oscillator	f =	MHz
☐	External clock	f =	MHz

5. Stop Mode

☐	Used
☐	Not used

6. Package

☐	FP-100A
☐	FP-100B
☐	TFP-100B

Cautions

1. Hitachi neither warrants nor grants licenses of any rights of Hitachi's or any third party's patent, copyright, trademark, or other intellectual property rights for information contained in this document. Hitachi bears no responsibility for problems that may arise with third party's rights, including intellectual property rights, in connection with use of the information contained in this document.
2. Products and product specifications may be subject to change without notice. Confirm that you have received the latest product standards or specifications before final design, purchase or use.
3. Hitachi makes every attempt to ensure that its products are of high quality and reliability. However, contact Hitachi's sales office before using the product in an application that demands especially high quality and reliability or where its failure or malfunction may directly threaten human life or cause risk of bodily injury, such as aerospace, aeronautics, nuclear power, combustion control, transportation, traffic, safety equipment or medical equipment for life support.
4. Design your application so that the product is used within the ranges guaranteed by Hitachi particularly for maximum rating, operating supply voltage range, heat radiation characteristics, installation conditions and other characteristics. Hitachi bears no responsibility for failure or damage when used beyond the guaranteed ranges. Even within the guaranteed ranges, consider normally foreseeable failure rates or failure modes in semiconductor devices and employ systemic measures such as fail-safes, so that the equipment incorporating Hitachi product does not cause bodily injury, fire or other consequential damage due to operation of the Hitachi product.
5. This product is not designed to be radiation resistant.
6. No one is permitted to reproduce or duplicate, in any form, the whole or part of this document without written approval from Hitachi.
7. Contact Hitachi's sales office for any questions regarding this document or Hitachi semiconductor products.

HITACHI

Hitachi, Ltd.
Semiconductor & Integrated Circuits.
Nippon Bldg., 2-6-2, Ohte-machi, Chiyoda-ku, Tokyo 100-0004, Japan
Tel: Tokyo (03) 3270-2111 Fax: (03) 3270-5109

URL	NorthAmerica	:	http:semiconductor.hitachi.com/
	Europe	:	http://www.hitachi-eu.com/hel/ecg
	Asia (Singapore)	:	http://www.has.hitachi.com.sg/grp3/sicd/index.htm
	Asia (Taiwan)	:	http://www.hitachi.com.tw/E/Product/SICD_Frame.htm
	Asia (HongKong)	:	http://www.hitachi.com.hk/eng/bo/grp3/index.htm
	Japan	:	http://www.hitachi.co.jp/Sicd/indx.htm

For further information write to:

Hitachi Semiconductor
(America) Inc.
179 East Tasman Drive,
San Jose,CA 95134
Tel: <1> (408) 433-1990
Fax: <1>(408) 433-0223

Hitachi Europe GmbH
Electronic components Group
Dornacher Straße 3
D-85622 Feldkirchen, Munich
Germany
Tel: <49> (89) 9 9180-0
Fax: <49> (89) 9 29 30 00

Hitachi Europe Ltd.
Electronic Components Group.
Whitebrook Park
Lower Cookham Road
Maidenhead
Berkshire SL6 8YA, United Kingdom
Tel: <44> (1628) 585000
Fax: <44> (1628) 778322

Hitachi Asia Pte. Ltd.
16 Collyer Quay #20-00
Hitachi Tower
Singapore 049318
Tel: 535-2100
Fax: 535-1533

Hitachi Asia Ltd.
Taipei Branch Office
3F, Hung Kuo Building. No.167,
Tun-Hwa North Road, Taipei (105)
Tel: <886> (2) 2718-3666
Fax: <886> (2) 2718-8180

Hitachi Asia (Hong Kong) Ltd.
Group III (Electronic Components)
7/F., North Tower, World Finance Centre,
Harbour City, Canton Road, Tsim Sha Tsui,
Kowloon, Hong Kong
Tel: <852> (2) 735 9218
Fax: <852> (2) 730 0281
Telex: 40815 HITEC HX

Copyright © Hitachi, Ltd., 1998. All rights reserved. Printed in Japan.