HT9302 Series

1-Memory/2-Memory Tone/Pulse Dialer

Patent Number: 64097, 86474, 64529, 113235 (R.O.C.)
5424740 (U.S.A.)

Features

- Universal specification
- Operating voltage: 2.0V~5.5V
- Low standby current
- Low memory retention current: 0.1μA (Typ.)
- Tone/pulse switchable
- Interface with LCD driver
- 32 digits for redialing
- 32 digits for SA memory dialing
- One-key redialing
- Pause and P→T key for PBX
- 4×4 keyboard matrix
- 3.58MHz crystal or ceramic resonator
- Hand-free control
- Hold-line control
- Pause, P→T can be saved for redialing
- Lock function
- Keytone function
- Resistor options:
  - M/B ratio
  - Flash function and flash time
  - Pause and P→T duration
  - Pulse number
  - Keyboard operated IDD lock function

General Description

The HT9302 series tone/pulse dialers are CMOS LSIs for telecommunication systems. They are designed to meet various dialing specifications through resistor option matrix.

The HT9302 series are offered in four different versions. They are HT9302X normal version, HT9302F/G/H simple version, HT9302XT keytone version and HT9302XLT keytone/lock function version. The HT9302X normal version provides the pin-selected lock function; the HT9302XT version provides the keytone function; the HT9302XLT version provides both the keytone function and keyboard-operated IDD lock function. All of the above three versions also supply the following functions: Hold-line, Hand-free and LCD dialing number display interface, all of which are suitable for feature phone applications. However, the HT9302F/G/H version is simpler than the other three versions. It provides only a redialing memory for simple low-cost system applications.

Powered by ICminer.com Electronic-Library Service CopyRight 2003

Selection Table

Function / Item	Keytone	Lock Function		Hold-Line	Hand-Free	LCD Interface	Package
		Pin Selection	Keyboard Operated				
HT9302X	(Normal version)						
HT9302A	—	√	—	—	—	—	18 DIP
HT9302B	—	√	—	√	√	—	22 SDIP
HT9302C	—	√	—	—	—	√	20 DIP
HT9302D	—	√	—	√	√	√	24 SDIP
HT9302XT	(Keytone version)						
HT9302AT	√	—	—	—	—	—	18 DIP
HT9302BT	√	—	—	√	√	—	22 SDIP
HT9302CT	√	—	—	—	—	√	20 DIP
HT9302DT	√	—	—	√	√	√	24 SDIP
HT9302XLT	(Keytone/Lock function version)						
HT9302ALT	√	—	√	—	—	—	18 DIP
HT9302BLT	√	—	√	√	√	—	22 SDIP
HT9302CLT	√	—	√	—	—	√	20 DIP
HT9302DLT	√	—	√	√	√	√	24 SDIP
HT9302F/G/H	(Simple version)						
HT9302F	—	—	—	—	—	—	18 DIP
HT9302G	—	—	—	—	—	—	16 DIP
HT9302H	—	—	—	—	—	—	18 DIP

Pin Assignment

HT9302X normal version

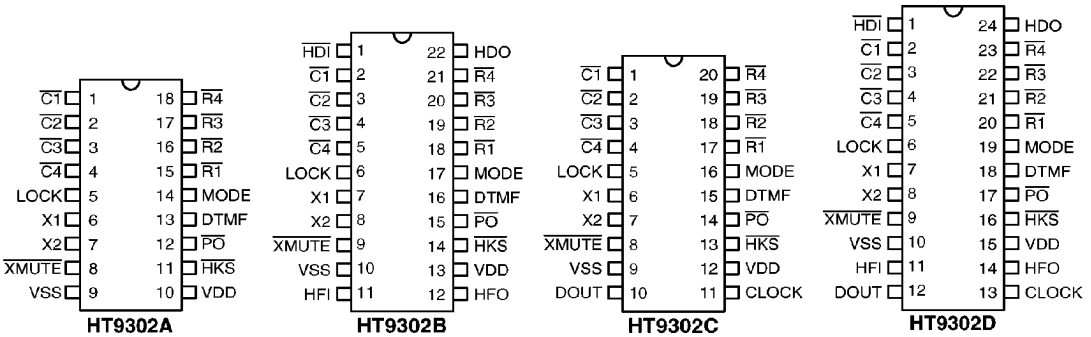

HT9302A – 18 DIP
HT9302B – 22 SDIP
HT9302C – 20 DIP
HT9302D – 24 SDIP

Powered by ICminer.com Electronic-Library Service CopyRight 2003

HT9302XT/XLT version

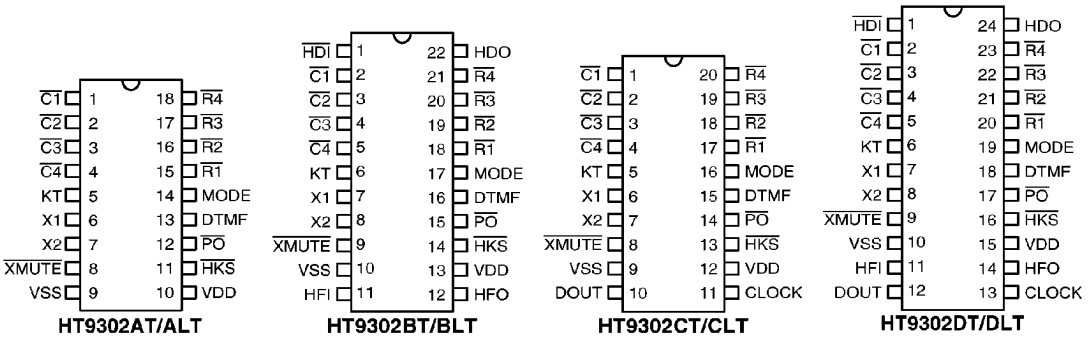

HT9302AT/ALT – 18 DIP **HT9302BT/BLT – 22 SDIP** **HT9302CT/CLT – 20 DIP** **HT9302DT/DLT – 24 SDIP**

HT9302F/G/H simple version

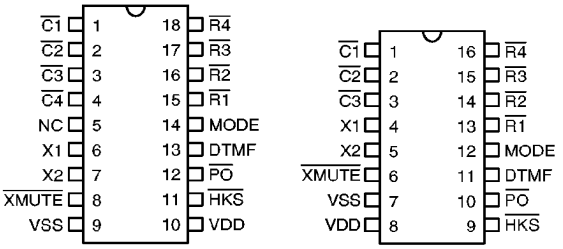

HT9302F/H – 18 DIP **HT9302G – 16 DIP**

Powered by ICminer.com Electronic-Library Service CopyRight 2003

Keyboard Information

HT9302X and HT9302XT

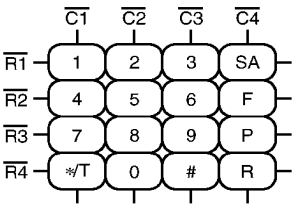

HT9302XLT

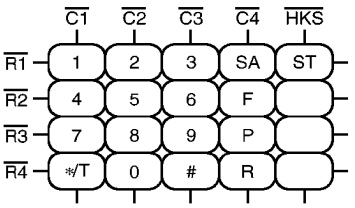

HT9302F

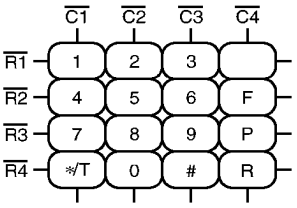

HT9302H

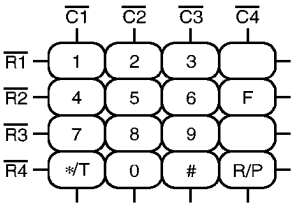

HT9302G

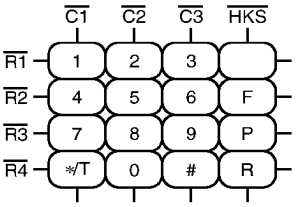

Powered by ICminer.com Electronic-Library Service CopyRight 2003

Block Diagram

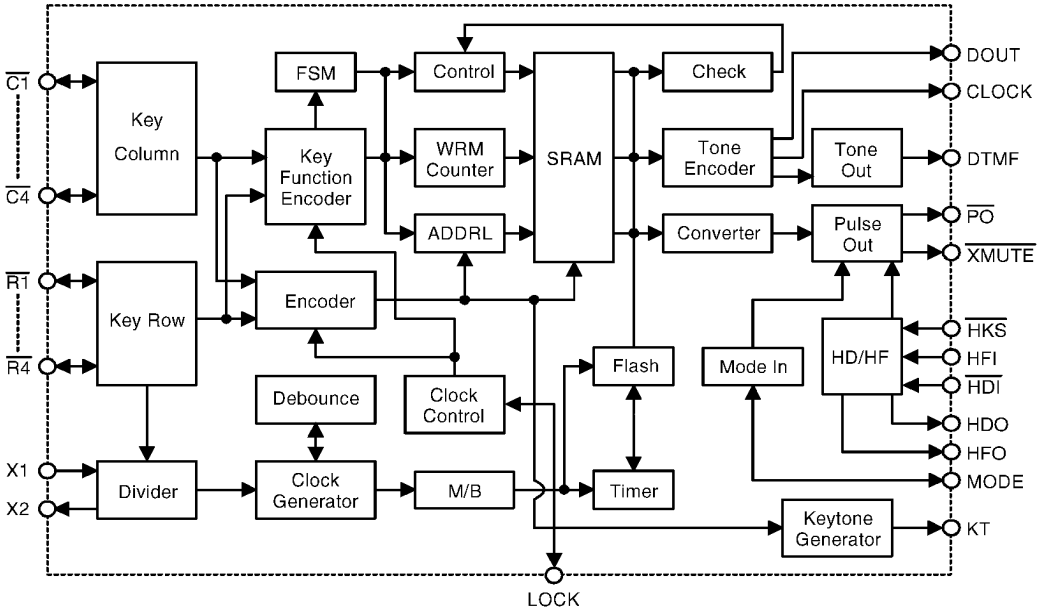

Pin Description

Pin Name	I/O	Internal Connection	Description
$\overline{C1}$~$\overline{C4}$ $\overline{R1}$~$\overline{R4}$	I/O	CMOS IN/OUT	These pins form a 4×4 keyboard matrix which can perform keyboard input detection and dialing specification setting functions. When on-hook ($\overline{HKS}$=high) all the pins are set high. While off-hook the column group ($\overline{C1}$~$\overline{C4}$) remains low and the row group ($\overline{R1}$~$\overline{R4}$) is set high for key input detection. An inexpensive single contact 4×4 keyboard can be used as an input device. Pressing a key connects a single column to a single row, and actuates the system oscillator that results in a dialing signal output. If more than two keys are pressed at the same time, no response occurs. The key-in debounce time is 20ms. Refer to the keyboard information for keyboard arrangement and to the functional description for dialing specification selection.
X1	I	OSCILLATOR	The system oscillator consists of an inverter, a bias resistor and the necessary load capacitor on chip. Connecting a standard 3.579545MHz crystal or ceramic resonator to the X1 and X2 terminals can implement the oscillator function. The oscillator is turned off in the standby mode, and is actuated whenever a keyboard entry is detected.
X2	O		

Powered by ICminer.com Electronic-Library Service CopyRight 2003

Pin Name	I/O	Internal Connection	Description
$\overline{\text{XMUTE}}$	O	NMOS OUT	$\overline{\text{XMUTE}}$ is an NMOS open drain structure pulled to VSS during dialing signal transmission. Otherwise, it is an open circuit. The $\overline{\text{XMUTE}}$ is used to mute the speech circuit when transmitting the dial signal.
$\overline{\text{HKS}}$	I	CMOS IN	This pin is used to monitor the status of the hook-switch and its combination with HFI/$\overline{\text{HDI}}$ can control the $\overline{\text{PO}}$ pin output to make or break the line. $\overline{\text{HKS}}$=VDD: On-hook state ($\overline{\text{PO}}$=low). Except for HFI/$\overline{\text{HDI}}$ (hand-free/hold-line control input), other functions are all disabled. $\overline{\text{HKS}}$=VSS: Off-hook state ($\overline{\text{PO}}$=high). The chip is in the standby mode and ready to receive the key input.
$\overline{\text{PO}}$	O	CMOS OUT	This pin is a CMOS output structure, which by receiving $\overline{\text{HKS}}$ and HFO/HDO signals, control the dialer to connect or disconnect the telephone line. $\overline{\text{PO}}$ outputs a low to break the line when $\overline{\text{HKS}}$ is high (on-hook) and HFO/HDO is low. $\overline{\text{PO}}$ outputs a high to make the line when $\overline{\text{HKS}}$ is low (off-hook) or HFO is high or HDO is high. During the off-hook state, the pin also outputs the dialing pulse train in pulse mode dialing. While in the tone mode, this pin is always high.
MODE	I/O	CMOS IN/OUT	This is a three-state input/output pin, used for dialing mode selection whether Tone mode or Pulse mode; 10pps/20pps. MODE=VDD: Pulse mode, 10pps MODE=OPEN: Pulse mode, 20pps MODE=VSS: Tone mode During pulse mode dialing, switching this pin to the tone mode changes the subsequent digit entry to tone mode. When the chips are in tone mode, switching to the pulse mode will also be recognized.
DTMF	O	CMOS OUT	This pin is active only when the chip transmits tone dialing signals. Otherwise, it always outputs a low. The pin outputs tone signals to drive the external transmitter amplifier circuit. The load resistor should not be less than 5kΩ.
$\overline{\text{HDI}}$	I	CMOS IN Pull-High	This pin is a schmitt trigger input structure. Active low. Applying a negative going pulse to this pin can toggle the HDO output once. An external RC network is recommended for input debouncing. The pull-high resistance is 200kΩ typ.

Powered by ICminer.com Electronic-Library Service CopyRight 2003

Pin Name	I/O	Internal Connection	Description
HDO	O	CMOS OUT	The HDO is a CMOS output structure. Its output is toggle-controlled by a negative transition on $\overline{HDI}$. When HDO is toggled high, $\overline{PO}$ keeps high to hold the line. The hold function can be released by setting HFO high or by an on-off hook operation or by another $\overline{HDI}$ input. The HDO pin can directly drive the HT3810 series melody generator to produce a hold-line background melody. Refer to the functional description for the hold-line function.
KT	O	CMOS OUT	Keytone output pin. Outputs a 1.2kHz tone carrier when any key is pressed in the pulse mode or when the function keys are pressed in the tone mode.
HFI	I	CMOS IN Pull-Low	This pin is a schmitt trigger input structure. Active high. Applying a positive going pulse to HFI can toggle the HFO once and hence control the hand-free function. The pull-low resistance of HFI is 200kΩ typ. An external RC network is recommended for input debouncing.
HFO	O	CMOS OUT	The HFO is a CMOS output structure. Its output is toggle-controlled by a positive transition on HFI pin. When HFO is high, the hand-free function is enabled and $\overline{PO}$ outputs a high to connect the line. The hand-free function can be released by setting HDO high or by an on-off-hook operation or by another HFI input. Refer to the functional description for the hand-free functional operation.
LOCK	I/O	CMOS IN/OUT	This is a three-state input/output pin, used for controlling long distance call function with a lock-switch. LOCK=OPEN: Normal dialing (no lock) LOCK=VDD: “0, 9” is inhibited for use as the first key input LOCK=VSS: “0” is inhibited for use as the first key input
DOUT	O	NMOS OUT	NMOS open drain output pin. It outputs the BCD code of the dialing digits to the LCD driver chip (HT16XX series) or μC for dialing number display. Refer to the functional description for the detailed timing.
CLOCK	O	NMOS OUT	NMOS open drain output. When dialing, it outputs a series of pulse trains for DOUT data synchronization. DOUT data is valid at the falling edge of clock.
VDD	I	—	Positive power supply, 2.0V~5.5V for normal operation
VSS	I	—	Negative power supply

Powered by ICminer.com Electronic-Library Service CopyRight 2003

Approximate internal connection circuits

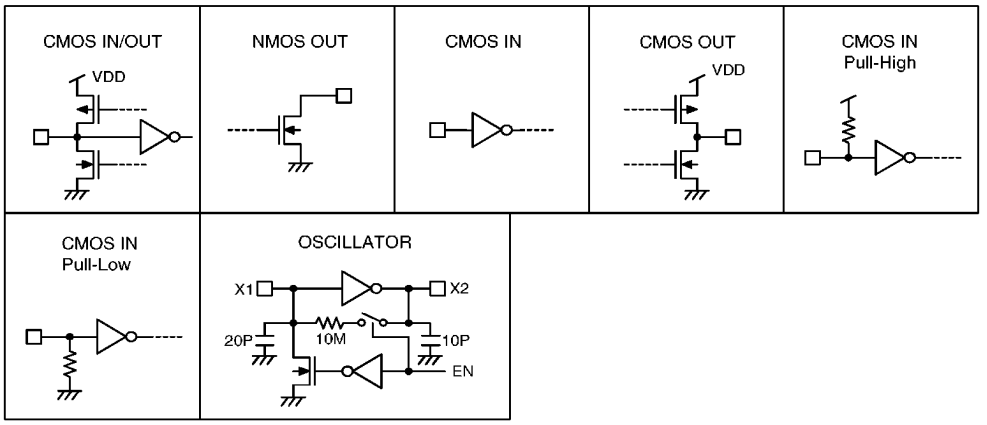

Absolute Maximum Ratings*

Supply Voltage ..... –0.3V to 6V

Input Voltage ..... V_{SS}–0.3 to V_{DD}+0.3V

Storage Temperature ..... –50°C to 125°C

Operating Temperature ..... –20°C to 75°C

*Note: Stresses above those listed under "Absolute Maximum Ratings" may cause permanent damage to the device. These are stress ratings only. Functional operation of this device at these or any other conditions above those indicated in the operational sections of this specification is not implied and exposure to absolute maximum rating conditions for extended periods may affect device reliability.

Electrical Characteristics

(F_{OSC}=3.5795MHz, Ta=25°C)

Symbol	Parameter	Test Conditions			Min.	Typ.	Max.	Unit
		V_{DD}	Conditions					
V_{DD}	Operating Voltage	—	—		2	—	5.5	V
I_{DD}	Operating Current	2.5V	Pulse	Off-hook	—	0.2	1	mA
			Tone	Keypad entry No load	—	0.6	2	mA
I_{STB}	Standby Current	1V	On-hook, no load No entry		—	—	1	μA
V_R	Memory Retention Voltage	—	—		1	—	5.5	V
I_R	Memory Retention Current	1V	On-hook		—	0.1	0.2	μA
V_{IL}	Input Low Voltage	—	—		V_{SS}	—	$0.2V_{DD}$	V
V_{IH}	Input High Voltage	—	—		$0.8V_{DD}$	—	V_{DD}	V
I_{XMO}	$\overline{XMUTE}$ Leakage Current	—	$V_{\overline{XMUTE}}$=12V No entry		—	—	1	μA
I_{OLXM}	$\overline{XMUTE}$ Sink Current	2.5V	$V_{\overline{XMUTE}}$=0.5V		1	—	—	mA

Powered by ICminer.com Electronic-Library Service CopyRight 2003

Symbol	Parameter	Test Conditions		Min.	Typ.	Max.	Unit
		V_{DD}	Conditions				
$I_{\overline{HKS}}$	$\overline{HKS}$ Pin Input Current	2.5V	$V_{\overline{HKS}}$=2.5V	—	—	0.1	μA
R_{HFI}	HFI Pull-Low Resistance	2.5V	V_{HFI}=2.5V	—	200	—	kΩ
$R_{\overline{HDI}}$	$\overline{HDI}$ Pull-High Resistance	2.5V	$V_{\overline{HDI}}$=0V	—	200	—	kΩ
I_{OH1}	Keypad Pin Source Current	2.5V	V_{OH}=0V	–4	—	–40	μA
I_{OL1}	Keypad Pin Sink Current	2.5V	V_{OL}=2.5V	200	400	—	μA
I_{OH2}	HFO Pin Source Current	2.5V	V_{OH}=2V	–1	—	—	mA
I_{OL2}	HFO Pin Sink Current	2.5V	V_{OL}=0.5V	1	—	—	mA
I_{OH3}	HDO Pin Source Current	2.5V	V_{OH}=2V	–1	—	—	mA
I_{OL3}	HDO Pin Sink Current	2.5V	V_{OL}=0.5V	1	—	—	mA
T_{FP}	Pause Time After Flash	—	Control key	—	0.2	—	s
			Digit key	—	1	—	
T_{RP}	One-key Redialing Pause Time	—	One-key redialing	—	1	—	s
T_{DB}	Key-in Debounce Time	—	—	—	20	—	ms
T_{BRK}	Break Time for One-key Redialing	—	One-key redialing	—	1.2	—	s
T_{KT}	Keytone Duration	—	—	34	—	ms	
F_{KTC}	Keytone Frequency	—	—	1.2	—	kHz	
F_{OSC}	System Frequency	—	Crystal=3.5795MHz	3.5759	3.5795	3.5831	MHz

Pulse Mode Electrical Characteristics

(F_{OSC}=3.5795MHz, Ta=25°C)

Symbol	Parameter	Test Conditions		Min.	Typ.	Max.	Unit
		V_{DD}	Conditions				
I_{POH}	$\overline{PO}$ Output Source Current	2.5V	V_{OH}=2V	–0.2	—	—	mA
I_{POL}	$\overline{PO}$ Output Sink Current	2.5V	V_{OL}=0.5V	0.2	0.6	—	mA
PR	Pulse Rate	—	MODE pin is connected to V_{DD}	—	10	—	pps
			MODE pin is opened	—	20	—	
M/B	Make/Break Ratio	—	A resistor is linked between $\overline{R2}$ and $\overline{C1}$	—	33:66	—	%
			No resistor is linked between $\overline{R2}$ and $\overline{C1}$	—	40:60	—	

Powered by ICminer.com Electronic-Library Service CopyRight 2003

Symbol	Parameter	Test Conditions		Min.	Typ.	Max.	Unit
		V_{DD}	Conditions				
T_{PDP}	Pre-digit-pause Time	—	M/B ratio=40:60	—	40 (10pps) 20 (20pps)	—	ms
			M/B ratio=33:66	—	33 (10pps) 17 (20pps)	—	
T_{IDP}	Inter-digit-pause Time	—	Pulse rate=10pps	—	800	—	ms
			Pulse rate=20pps	—	500	—	
T_M	Pulse Make Duration	—	A resistor is linked between $\overline{R2}$ and $\overline{C1}$	—	33 (10pps) 17 (20pps)	—	ms
			No resistor is linked between $\overline{R2}$ and $\overline{C1}$	—	40 (10pps) 20 (20pps)	—	
T_B	Pulse Break Duration	—	A resistor is linked between $\overline{R2}$ and $\overline{C1}$	—	66 (10pps) 33 (20pps)	—	ms
			No resistor is linked between $\overline{R2}$ and $\overline{C1}$	—	60 (10pps) 30 (20pps)	—	

Tone Mode Electrical Characteristics

(F_{OSC}=3.5795MHz, Ta=25°C)

Symbol	Parameter	Test Conditions			Min.	Typ.	Max.	Unit
		V_{DD}	Conditions					
V_{TDC}	DTMF Output DC Level	—	—		0.45V_{DD}	—	0.7V_{DD}	V
I_{TOL}	DTMF Sink Current	2.5V	V_{DTMF}=0.5V		0.1	—	—	mA
V_{TAC}	DTMF Output AC Level	—	Row group, R_L=5kΩ		0.12	0.155	0.18	Vrms
R_L	DTMF Output Load	2.5V	THD≤–23dB		5	—	—	kΩ
A_{CR}	Column Pre-emphasis	2.5V	Row group=0dB		1	2	3	dB
THD	Tone Signal Distortion	2.5V	R_L=5kΩ		—	–30	–23	dB
T_{TMIN}	Minimum Tone Duration	—	Auto-redial	Others	—	82.5	—	ms
				9302G	—	100	—	
T_{ITPM}	Minimum Inter-tone Pause	—	Auto-redial	Others	—	85.5	—	ms
				9302G	—	106	—	

THD (Distortion) (dB) = 20 log ($\sqrt{V1^2 + V2^2 + \ldots + Vn^2} / \sqrt{Vi^2 + Vh^2}$)

Vi, Vh: Row group and column group signals

V1, V2, ... Vn: Harmonic signals (BW=300Hz~3500Hz)

Powered by ICminer.com Electronic-Library Service CopyRight 2003

Functional Description

Keyboard matrix

$\overline{C1}$~$\overline{C4}$ and $\overline{R1}$~$\overline{R4}$ form a keyboard matrix. Together with a standard 4×4 keyboard, the keyboard matrix is used for dialing entries. In addition, the keyboard matrix provides resistor option for different dialing specification selections. The keyboard arrangement for each of the HT9302 series are shown in the **Keyboard Information**.

Tone frequency

Tone Name	Output Frequency (Hz)		% Error
	Specified	Actual	
$\overline{R1}$	697	699	+0.29%
$\overline{R2}$	770	766	–0.52%
$\overline{R3}$	852	847	–0.59%
$\overline{R4}$	941	948	+0.74%
$\overline{C1}$	1209	1215	+0.50%
$\overline{C2}$	1336	1332	–0.30%
$\overline{C3}$	1477	1472	–0.34%

Note: % Error does not contain the crystal frequency drift

Dialing specification selection

By means of adding resistors on the keyboard matrix pins, various dialing specifications can be selected. The allowable option resistor connections are shown.

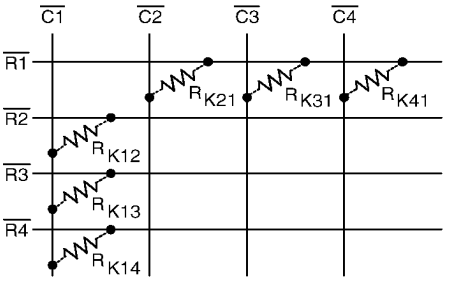

All the resistors are 330kΩ. The resistor option functions and the default specifications (without option resistors) are listed below.

Option Resistor	Option Function	Default (No Resistor)
R_{K12}	Make/Break Ratio Selection	40:60
R_{K13}	Flash Function and Flash Time Selection	Flash= control function Flash time= 600ms
R_{K14}		
R_{K21}	Pause & P→T Duration Selection	T_P= 3.6s $T_{P\rightarrow T}$= 3.6s
R_{K31}	Pulse Number Selection or IDD Lock Selection	N or Keyboard operated lock
R_{K41}		

Powered by ICminer.com Electronic-Library Service CopyRight 2003

M/B ratio selection table

R_{K12}	M/B Ratio (%)
No	40:60
Yes	33.3:66.6

Flash function/time (duration) selection table

R_{K13}	R_{K14}	Flash Function	Flash Time (T_F)
No	No	Control	600ms
No	Yes	Digit	600ms
Yes	No	Digit	98ms
Yes	Yes	Digit	300ms

Pause and P→T duration selection table

R_{K21}	T_P (sec)	$T_{P\rightarrow T}$ (sec)
No	3.6	3.6
Yes	2	1

Pulse number selection table

- This table shows pulse number selections for HT9302X and HT9302XT. The table for HT9302XLT is used to select IDD lock function.

R_{K31}	R_{K41}	Pulse Number
No	No	N
No	Yes	N+1
Yes	No	10–N
Yes	Yes	—

- HT9302G has different selection method listed in the table below.

R_{K31}	Pulse Number
No	N
Yes	10-N

Pulse number table

Keypad	Output Pulse Number		
Digit Key	Normal N	New Zealand (10–N)	Sweden/ Denmark (N+1)
1	1	9	2
2	2	8	3
3	3	7	4
4	4	6	5
5	5	5	6
6	6	4	7
7	7	3	8
8	8	2	9
9	9	1	10
0	10	10	1
*/T	P→T	P→T	P→T
#	Ignored	Ignored	Ignored

Hand-free function operation

- Hand-free function execution
  When HFO is low, a rising edge triggers the HFI, enabling the Hand-free function (HFO becomes high).
- Reset Hand-free function
  When HFO is high, the Hand-free function is enabled and can be reset by:
  - Off-hook
  - Applying a rising edge to HFI
  - Changing the HDO pin from low to high

Powered by ICminer.com Electronic-Library Service CopyRight 2003

- Hand-free function table

Current State			Input			Next State	
$\overline{HKS}$	HFO	HDO	$\overline{HDI}$	HFI	$\overline{HKS}$	HFO	HDO
H	L	X	H	L	An	L	An
H	L	X	H	↑	An	H	L
H	H	X	H	↑	An	L	An
H	X	L	H	L	L	L	L
L	L	X	H	L	An	L	An
L	L	X	H	↑	An	H	L
L	H	L	H	↑	An	L	An
L	X	X	H	L	H	An	An
X	X	L	↓	L	An	L	H

H: Logic HIGH X: Don't care ↑ : Rising edge
L: Logic LOW An: Unchanged ↓ : Falling edge

- Hold-line function table

Current State			Input			Next State	
$\overline{HKS}$	HDO	HFO	HFI	$\overline{HDI}$	$\overline{HKS}$	HDO	HFO
H	L	X	L	H	An	L	An
H	L	X	L	↓	An	H	L
H	H	L	L	↓	An	L	An
H	X	X	L	H	L	L	L
L	L	X	L	H	An	L	An
L	L	X	L	↓	An	H	L
L	H	L	L	↓	An	L	An
L	X	X	L	H	H	An	An
X	X	L	↑	H	An	L	H

H: Logic HIGH X: Don't care ↑ : Rising edge
L: Logic LOW An: Unchanged ↓ : Falling edge

Hold-line function operation

- Hold-line function execution

  When HDO is low, a falling edge triggers the $\overline{HDI}$, enabling the Hold-line function (HDO becomes high). The $\overline{XMUTE}$ remains low when HDO is high.

- Reset Hold-line function

  When HDO is high, the Hold-line function is enabled and can be reset by:

  - Off-hook
  - Applying a falling edge to $\overline{HDI}$
  - Changing the HFO pin from low to high

DOUT BCD code

When dialing, the corresponding 4-bit BCD codes are serially presented on DOUT from MSB to LSB. The data of DOUT is valid at the falling edge of the CLOCK pin. The following table lists the BCD codes corresponding to the keyboard input.

Key-In	BCD Code	Key-In	BCD Code
1	0001	8	1000
2	0010	9	1001
3	0011	0	1010
4	0100	*/T	1101
5	0101	#	1100
6	0110	F	1011
7	0111	P	1110

Powered by ICminer.com Electronic-Library Service CopyRight 2003

LOCK function

The function aims to detect locked dialing number to prevent a long distance call. The dialing output of the chip is disabled if the first input key after on-off-hook is the locked number when the lock function is enabled. The lock function selection is listed below.

The HT9302X version is the pin-selected type, while the HT9302XLT is the keyboard operated type. The HT9302XT version does not support any lock function.

- HT9302X version

LOCK Pin	Function
OPEN	Normal dialing (no lock)
VDD	"0, 9" is inhibited
VSS	"0" is inhibited

- HT9302XLT version

R_{K31}	R_{K41}	Function
No	No	Keyboard operated IDD lock
No	Yes	Lock 0
Yes	No	Lock 0, 9
Yes	Yes	All keys are locked

Key definition

- 0,1,2,3,4,5,6,7,8,9 keys
  These are dialing number input keys for both the pulse mode and the tone mode operations.
- */T
  This key executes the P→T function and waits a $T_{P\rightarrow T}$ duration in the pulse mode. On the other hand, the */T key executes the * function in the tone mode.
- #
  This is a dialing signal key for the tone mode only, no response in the pulse mode.
- SA
  Pressing this key can save the preceding dialing telephone numbers. The saved number is redialed if it is pressed again. SA will also redial the saved number if it is the first key pressed at the off-hook state. During the dialing signal transmission, the SA key is inhibited.
- F
  The flash key can be selected as a digit or a control key by the option resistors R_{K13} & R_{K14}. Pressing the flash key will force the $\overline{PO}$ pin to be "low" for the T_F duration and is then followed by T_{FP} (sec). T_F can also be selected by R_{K13}, R_{K14}.
- P
  Pause key. The execution of the pause key pauses the output for the T_P duration. T_P can be selected by R_{K21}.
- R
  Redial key. Executes redialing as well as one-key redial function.
- ST
  This key can store lock number with personal code in IDD lock operation.
- R/P
  Redial and pause function key. If it is pressed as the first key after off-hook, this key executes the redial function. Otherwise, it works as the pause key.

Powered by ICminer.com Electronic-Library Service CopyRight 2003

Keyboard operation

The following operations are described under an on-off- hook or on-hook condition with the hand-free active condition.

- Normal dialing

  – Pulse mode

  (a) without */T

  Keyboard input: [D1] [D2] ... [Dn]

  Dialing output: D1 D2 ... Dn

  RM: D1 D2 ... Dn

  SAM: Unchanged

  (b) with */T

  Keyboard input: [D1] [D2] ... [Dn] [*/T] [Dn+1] ... [Dm]

  Dialing output: $\underbrace{\text{D1 D2 ... Dn}}_{\text{Pulse}}$ $T_{P\to T}$ $\underbrace{\text{Dn+1 ... Dm}}_{\text{Tone}}$

  RM: D1 D2 ... Dn */T Dn+1 ... Dm

  SAM: Unchanged

  – Tone mode

  (a) without */T

  Keyboard input: [D1] [D2] ... [Dn]

  Dialing output: D1 D2 ... Dn

  RM: D1 D2 ... Dn

  SAM: Unchanged

  (b) with */T

  Keyboard input: [D1] [D2] ... [Dn] [*/T] [Dn+1] ... [Dm]

  Dialing output: D1 D2 ... Dn * Dn+1 ... Dm

  RM: D1 D2 ... Dn * Dn+1 ... Dm

  SAM: Unchanged

  Note: The maximum capacity of the RM memory is 32 digits. When more than 32 digits are entered, the signal is transmitted but the redial function is inhibited.

- Redial

  – Pulse mode

  (a) without */T

  RM content: D1 D2 ... Dn

  Keyboard input: [[R] or [R/P]]

  Dialing output: D1 D2 ... Dn

  RM: Unchanged

  SAM: Unchanged

  (b) with */T

  RM content: D1 D2 ... Dn */T Dn+1 ... Dm

  Keyboard input: [[R] or [R/P]]

  Dialing output: $\underbrace{\text{D1 D2 ... Dn}}_{\text{Pulse}}$ $T_{P\to T}$ $\underbrace{\text{Dn+1 ... Dm}}_{\text{Tone}}$

  RM: Unchanged

  SAM: Unchanged

  – Tone mode

  (a) without */T

  RM content: D1 D2 ... Dn

  Keyboard input: [[R] or [R/P]]

  Dialing output: D1 D2 ... Dn

  RM: Unchanged

  SAM: Unchanged

  (b) with */T

  RM content: D1 D2 ... Dn */T Dn+1 ... Dm

  Keyboard input: [[R] or [R/P]]

  Dialing output: D1 D2 ... Dn * Dn+1 ... Dm

  RM: Unchanged

  SAM: Unchanged

Powered by ICminer.com Electronic-Library Service CopyRight 2003

- One-key redial
  - Pulse mode
    - (a) without ∗/T
      - Keyboard input: [D1] [D2] ... [Dn] [R]
      - Dialing output: D1 D2 ... Dn T_{BRK} T_{RP} D1 D2 ... Dn
      - RM: D1 D2 ... Dn
      - SAM: Unchanged
    - (b) with ∗/T
      - Keyboard input: [D1] [D2] ... [Dn] [∗/T] [Dn+1] ... [Dm] [R]
      - Dialing output: $\underbrace{D1\ D2 \ldots Dn}_{\text{Pulse}}$ $T_{P\to T}$ $\underbrace{Dn+1 \ldots Dm}_{\text{Tone}}$ T_{BRK} T_{RP} $\underbrace{D1\ D2 \ldots Dn}_{\text{Pulse}}$ $T_{P\to T}$ $\underbrace{Dn+1 \ldots Dm}_{\text{Tone}}$
      - RM: D1 D2 ... Dn ∗/T Dn+1 ... Dm
      - SAM: Unchanged
  - Tone mode
    - (a) without ∗/T
      - Keyboard input: [D1] [D2] ... [Dn] [R]
      - Dialing output: D1 D2 ... Dn T_{BRK} T_{RP} D1 D2 ... Dn
      - RM: D1 D2 ... Dn
      - SAM: Unchanged
    - (b) with ∗/T
      - Keyboard input: [D1] [D2] ... [Dn] [∗/T] [Dn+1] ... [Dm] [R]
      - Dialing output: D1 D2 ... Dn ∗ Dn+1 ... Dm T_{BRK} T_{RP} D1 D2 ... Dn ∗ Dn+1 ... Dm
      - RM: D1 D2 ... Dn ∗ Dn+1 ... Dm
      - SAM: Unchanged

Note: If the dialing number is more than 32 digits, redialing is inhibited and $\overline{PO}$=VDD

- SA copy
  - Pulse mode
    - (a) without ∗/T
      - Keyboard input: [D1] [D2] ... [Dn] [SA]
      - Dialing output: D1 D2 ... Dn
      - RM: D1 D2 ... Dn
      - SAM: D1 D2 ... Dn
    - (b) with ∗/T
      - Keyboard input: [D1] [D2] ... [Dn] [∗/T] [Dn+1] ... [Dm] [SA]
      - Dialing output: $\underbrace{D1\ D2 \ldots Dn}_{\text{Pulse}}$ $T_{P\to T}$ $\underbrace{Dn+1 \ldots Dm}_{\text{Tone}}$
      - RM: D1 D2 ... Dn ∗/T Dn+1 ... Dm
      - SAM: D1 D2 ... Dn ∗/T Dn+1 ... Dm
  - Tone mode
    - (a) without ∗/T
      - Keyboard input: [D1] [D2] ... [Dn] [SA]
      - Dialing output: D1 D2 ... Dn
      - RM: D1 D2 ... Dn
      - SAM: D1 D2 ... Dn
    - (b) with ∗/T
      - Keyboard input: [D1] [D2] ... [Dn] [∗/T] [Dn+1] ... [Dm] [SA]
      - Dialing output: D1 D2 ... Dn ∗ Dn+1 ... Dm
      - RM: D1 D2 ... Dn ∗ Dn+1 ... Dm
      - SAM: D1 D2 ... Dn ∗ Dn+1 ... Dm

Note: The maximum capacity of the RM memory is 32 digits. When more than 32 digits plus the "SA" key are entered, the SAVE function will not be executed, and all the existing data in the save memory will not be changed.

Powered by ICminer.com Electronic-Library Service CopyRight 2003

- SA dialing
  - Pulse mode
    - (a) without ∗/T
      - SAM content: D1 D2 ... Dn
      - Keyboard input: [SA]
      - Dialing output: D1 D2 ... Dn
      - RM: Unchanged
      - SAM: Unchanged
    - (b) with ∗/T
      - SAM content: D1 D2 ... Dn ∗/T Dn+1 ... Dm
      - Keyboard input: [SA]
      - Dialing output: $\underbrace{D1\ D2 \ldots Dn}_{\text{Pulse}}$ $T_{P\rightarrow T}$ $\underbrace{Dn+1 \ldots Dm}_{\text{Tone}}$
      - RM: Unchanged
      - SAM: Unchanged
  - Tone mode
    - (a) without ∗/T
      - SAM content: D1 D2 ... Dn
      - Keyboard input: [SA]
      - Dialing output: D1 D2 ... Dn
      - RM: Unchanged
      - SAM: Unchanged
    - (b) with ∗/T
      - SAM content: D1 D2 ... Dn ∗ Dn+1 ... Dm
      - Keyboard input: [SA]
      - Dialing output: D1 D2 ... Dn ∗ Dn+1 ... Dm
      - RM: Unchanged
      - SAM: Unchanged

- Flash
  - Flash as a digital key
    - (a) The intervenient key
      - Keyboard input: [D1] [D2] ... [Dn] [F] [Dn+1] ... [Dm]
      - Dialing output: D1 D2 ... Dn T_F T_{FP} Dn+1 ... Dm
      - RM: D1 D2 ... Dn
      - SAM: Unchanged
    - (b) The first key
      - Keyboard input: [F] [D1] [D2] ... [Dn]
      - Dialing output: T_F T_{FP} D1 D2 ... Dn
      - RM: Unchanged
      - SAM: Unchanged
  - Flash as a control key
    - Keyboard input: [D1] [D2] ... [Dn] [F] [Dn+1] ... [Dm]
    - Dialing output: D1 D2 ... Dn T_F T_{FP} Dn+1 ... Dm
    - RM: Dn+1 ... Dm
    - SAM: Unchanged

  Note: T_F: break a flash time

- Pause
  - Keyboard input: [D1] [D2] ... [Dn] [P] [Dn+1] ... [Dm]
  - Dialing output: D1 D2 ... Dn T_P Dn+1 ... Dm
  - RM: D1 D2 ... Dn P Dn+1 ... Dm
  - SAM: Unchanged

- Note
  - RM: Redial memory
  - SAM: Save dialing memory
  - D1 D2 ... Dn: 0~9
  - Dn+1 ... Dm: 0~9, ∗, #

Powered by ICminer.com Electronic-Library Service CopyRight 2003

- IDD lock operation by the keyboard (2 lock numbers, 3 digits/number at maximum)
  - Personal/Lock No.1/Lock No.2 input operation

    (a) Personal code doesn't exist

    Stores Personal Code: ST D1 D2 D3 ST ∗ 0

    Stores Lock No.1: ST D4 D5 D6 ST ∗ 1

    Stores Lock No.2: ST D7 D8 D9 ST ∗ 2

    (b) Personal code exist

    Changes Personal Code: ST D1 D2 D3 ST # ST D4 D5 D6 ST ∗ 0
    (Old personal code) (New personal code)

    Changes Lock No.1: ST D1 D2 D3 ST # ST D4 D5 D6 ST ∗ 1
    (Personal code) (Lock No.1)

    Changes Lock No.2: ST D1 D2 D3 ST # ST D7 D8 D9 ST ∗ 2
    (Personal code) (Lock No.2)

    Changes Personal Code, Lock No.1 and Lock No.2 at one time

    ST D1 D2 D3 ST # ST D4 D5 D6 ST ∗ 0 (continued)
    (Old personal code) (New personal code)

    ST D7 D8 D9 ST ∗ 1 ST D10 D11 D12 ST ∗ 2
    (Lock No.1) (Lock No.2)

  - Personal/Lock No.1/Lock No.2 cancel operation

    Cancels Personal code: ST D1 D2 D3 ST # ST # 0

    Cancels Lock No.1: ST D1 D2 D3 ST # ST # 1

    Cancels Lock No.2: ST D1 D2 D3 ST # ST # 2

  - Temporary release both of the lock numbers (Lock No.1, Lock No.2):

    ST D1 D2 D3 ST # Dm Dm+1 Dm+2 Dl ... Dn
    (Personal code)

    Note: D1~D12 = 0~9
    Dm Dm+1 Dm+2 = 0~9
    Dl ... Dn = 0~9, ∗, #

- Note:

  RM: Redial memory

  SAM: Save dialing memory

  D1 D2 ... Dn: 0~9

  Dn+1 ... Dm: 0~9, ∗, #

  Dm+1 ... Dl: 0~9, ∗, #

  Dl+1 ... DK: 0~9, ∗, #

Powered by ICminer.com Electronic-Library Service CopyRight 2003

Timing Diagrams

Normal dialing

• Pulse mode

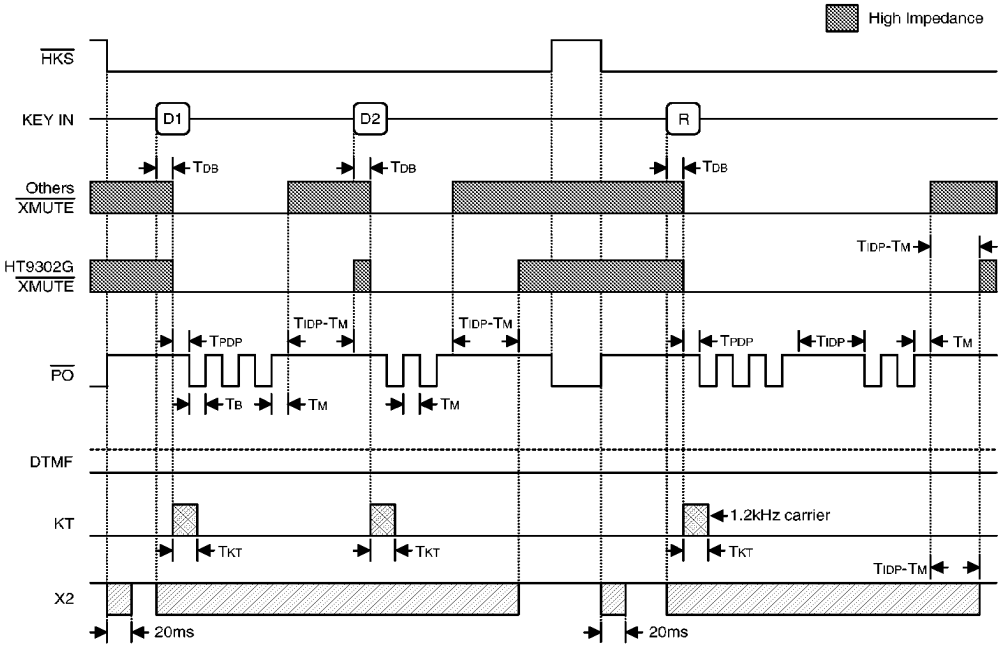

• Tone mode

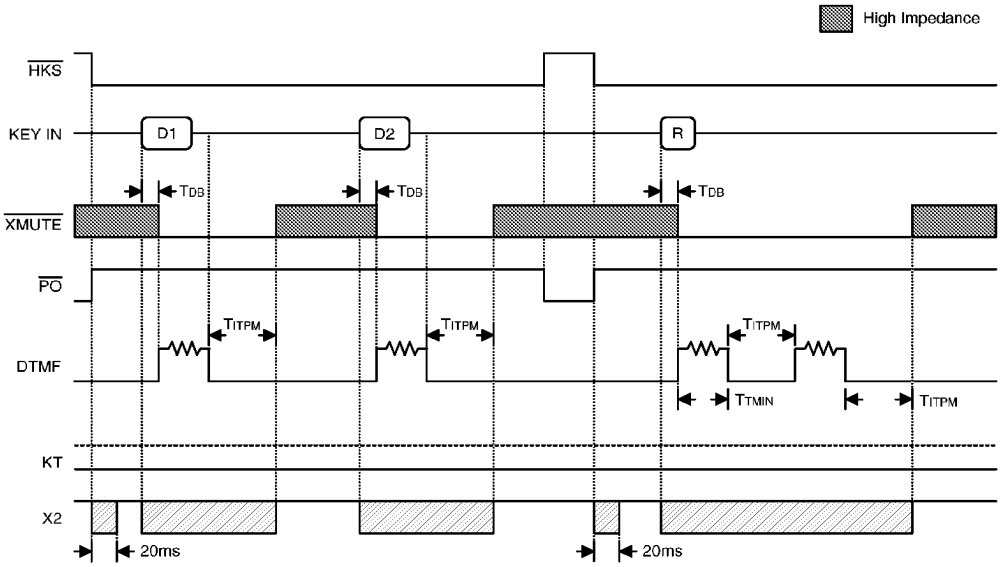

Powered by ICminer.com Electronic-Library Service CopyRight 2003

Dialing with pause key

• Pulse mode

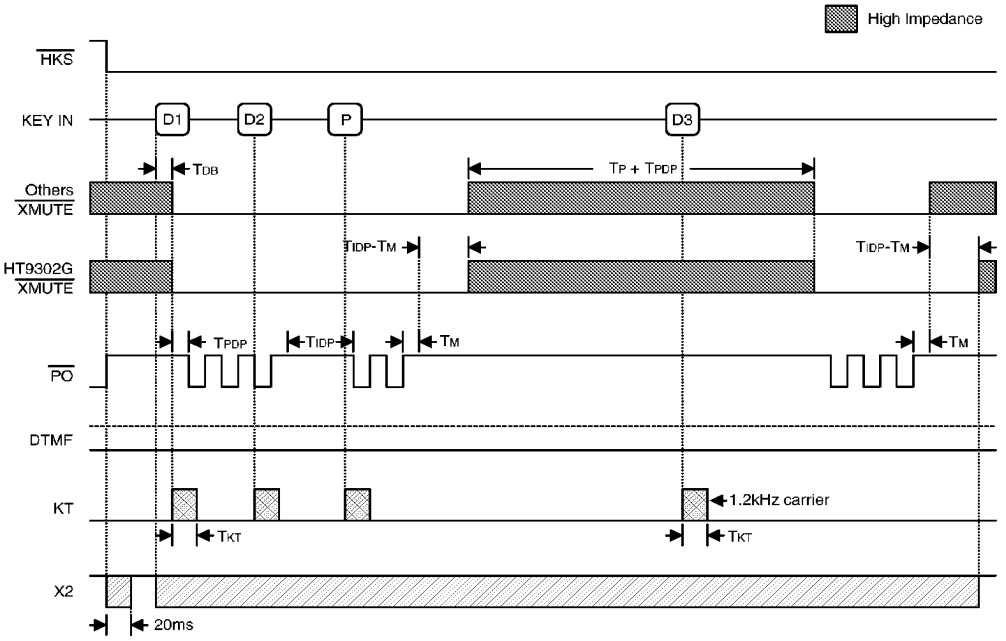

• Tone mode

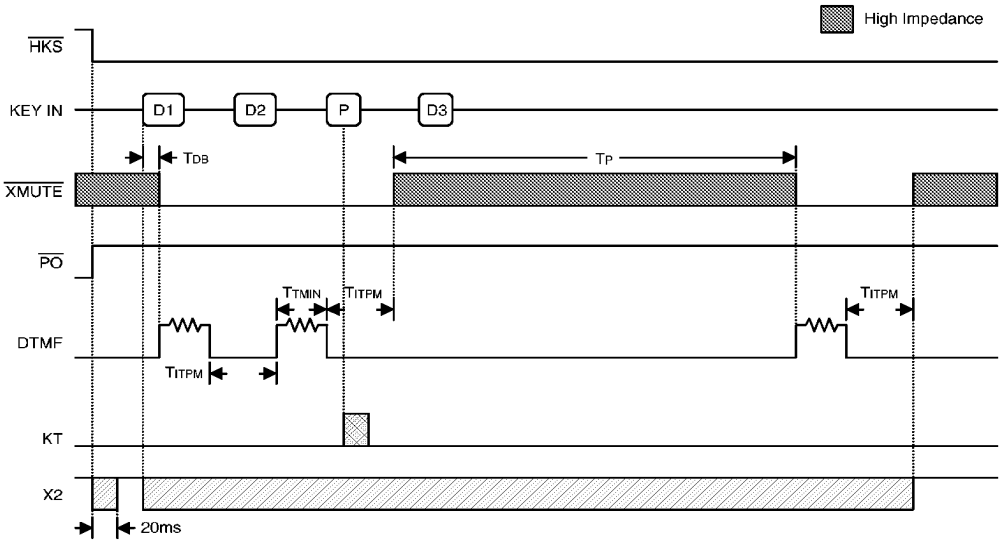

Powered by ICminer.com Electronic-Library Service CopyRight 2003

Flash key operation

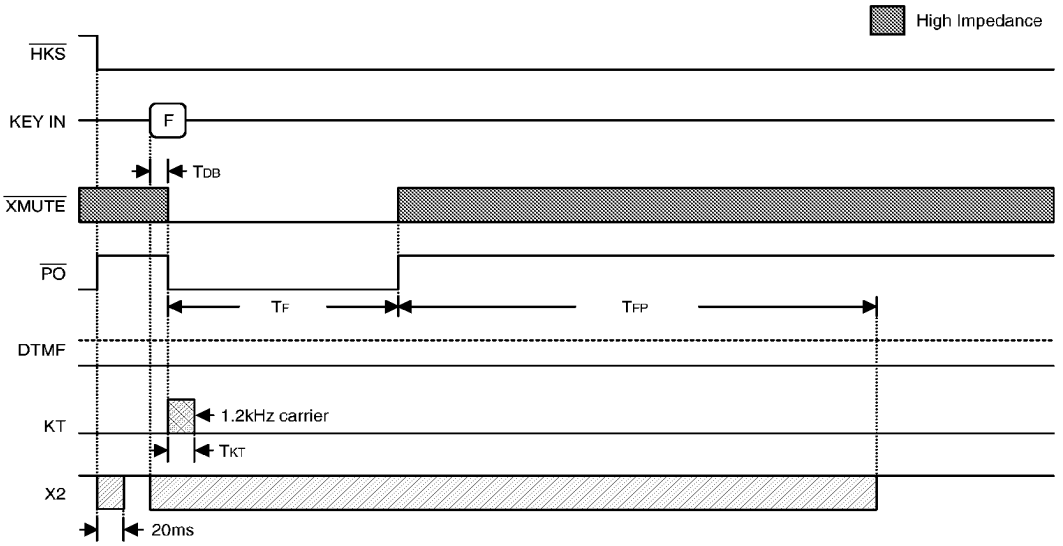

Pulse→Tone operation

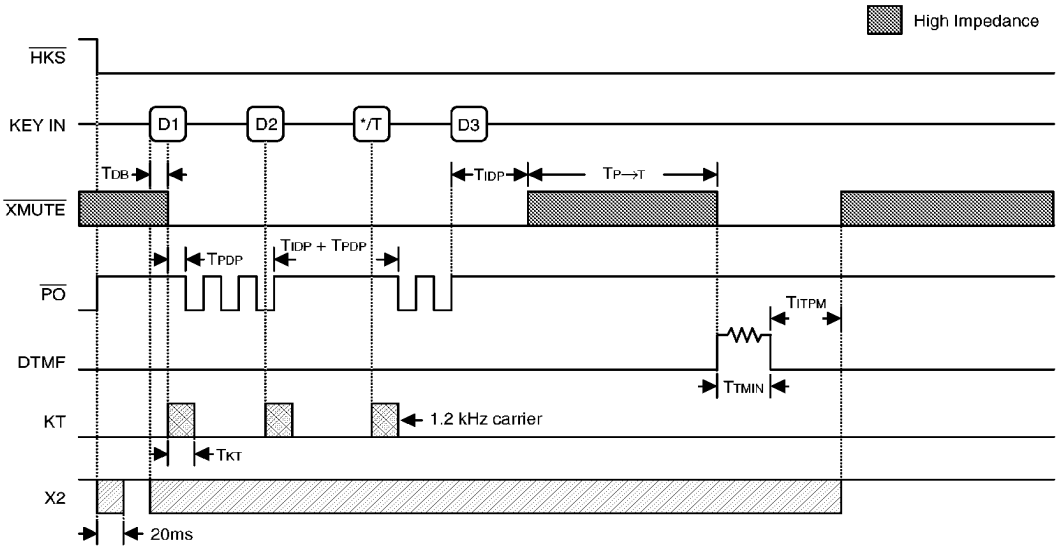

Powered by ICminer.com Electronic-Library Service CopyRight 2003

One key redial operation

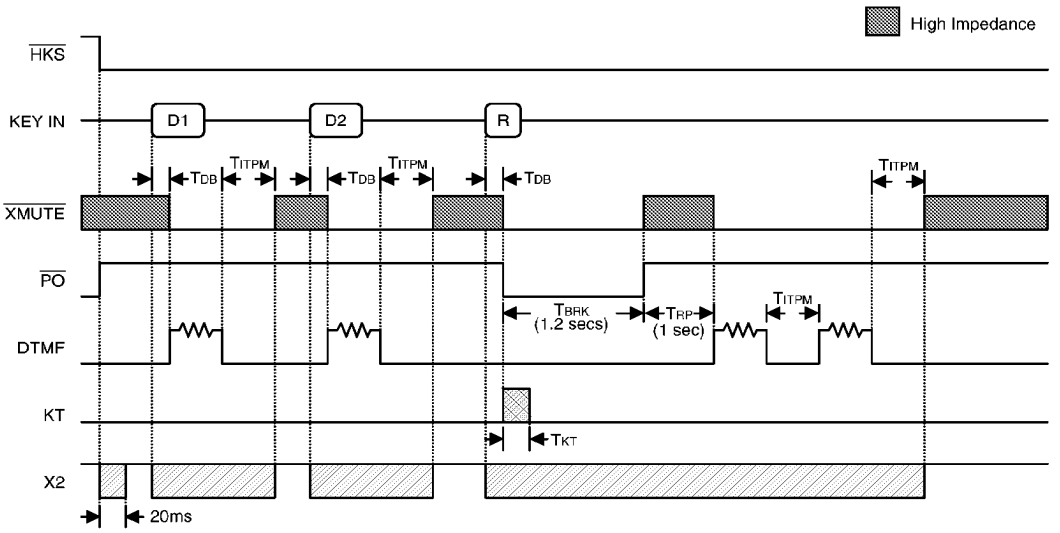

CLOCK & DOUT operation

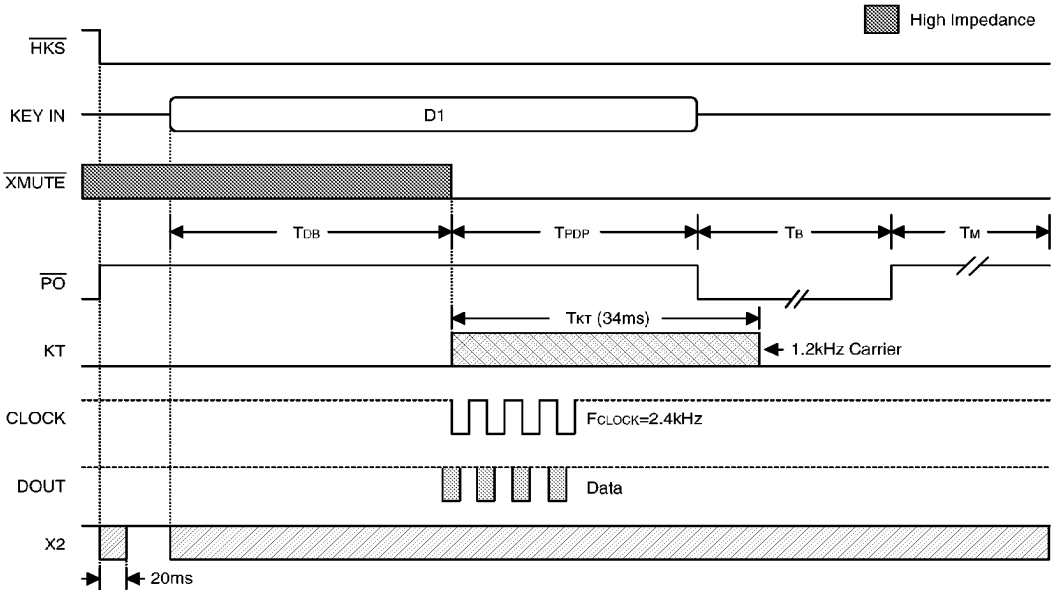

Note: D1=D3=3
D2=2

Powered by ICminer.com Electronic-Library Service CopyRight 2003

Application Circuits

Application circuit 1

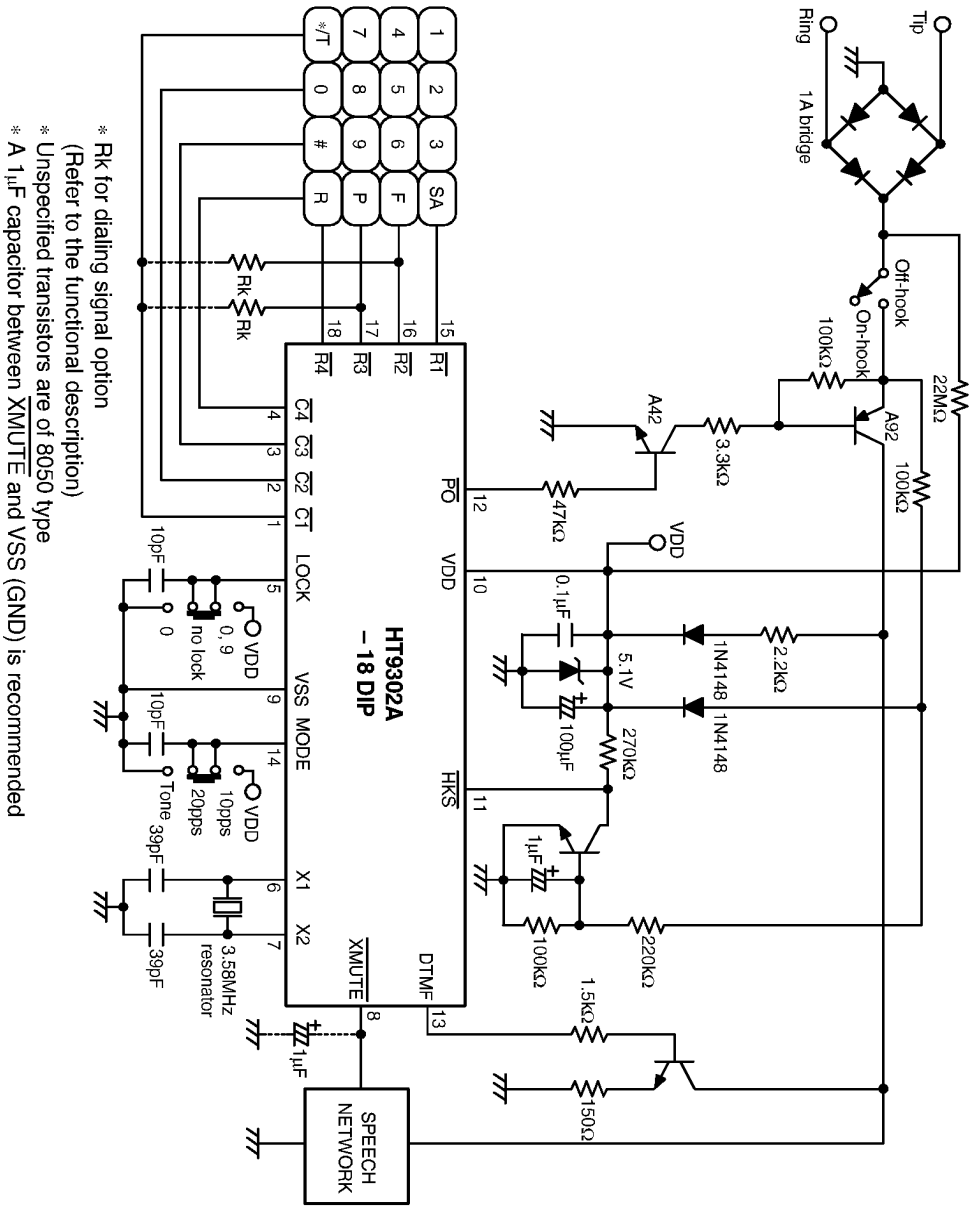

Powered by ICminer.com Electronic-Library Service CopyRight 2003

Application circuit 2

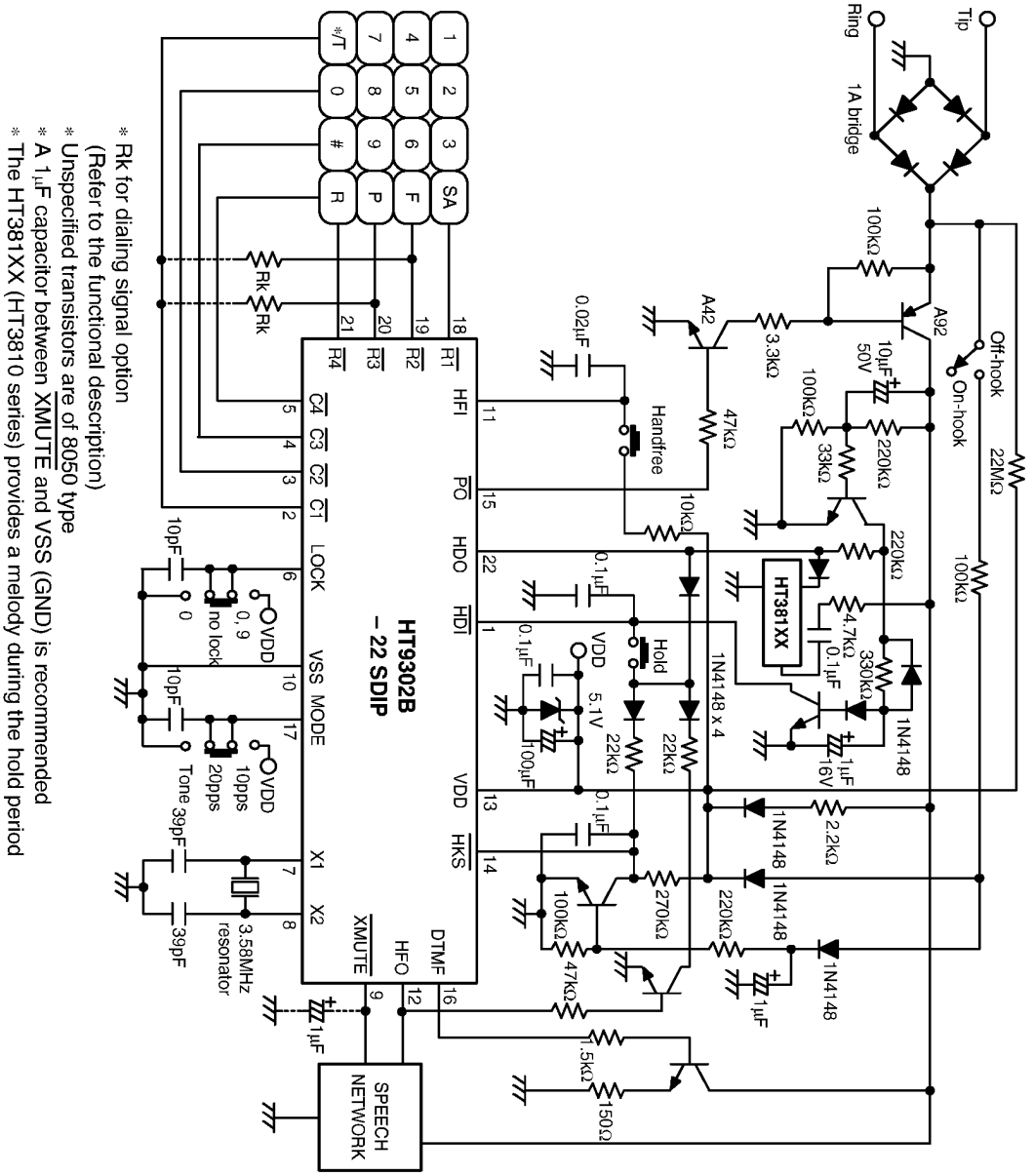

* Rk for dialing signal option
(Refer to the functional description)
* Unspecified transistors are of 8050 type
* A 1μF capacitor between XMUTE and VSS (GND) is recommended
* The HT381XX (HT3810 series) provides a melody during the hold period

Powered by ICminer.com Electronic-Library Service CopyRight 2003

Application circuit 3

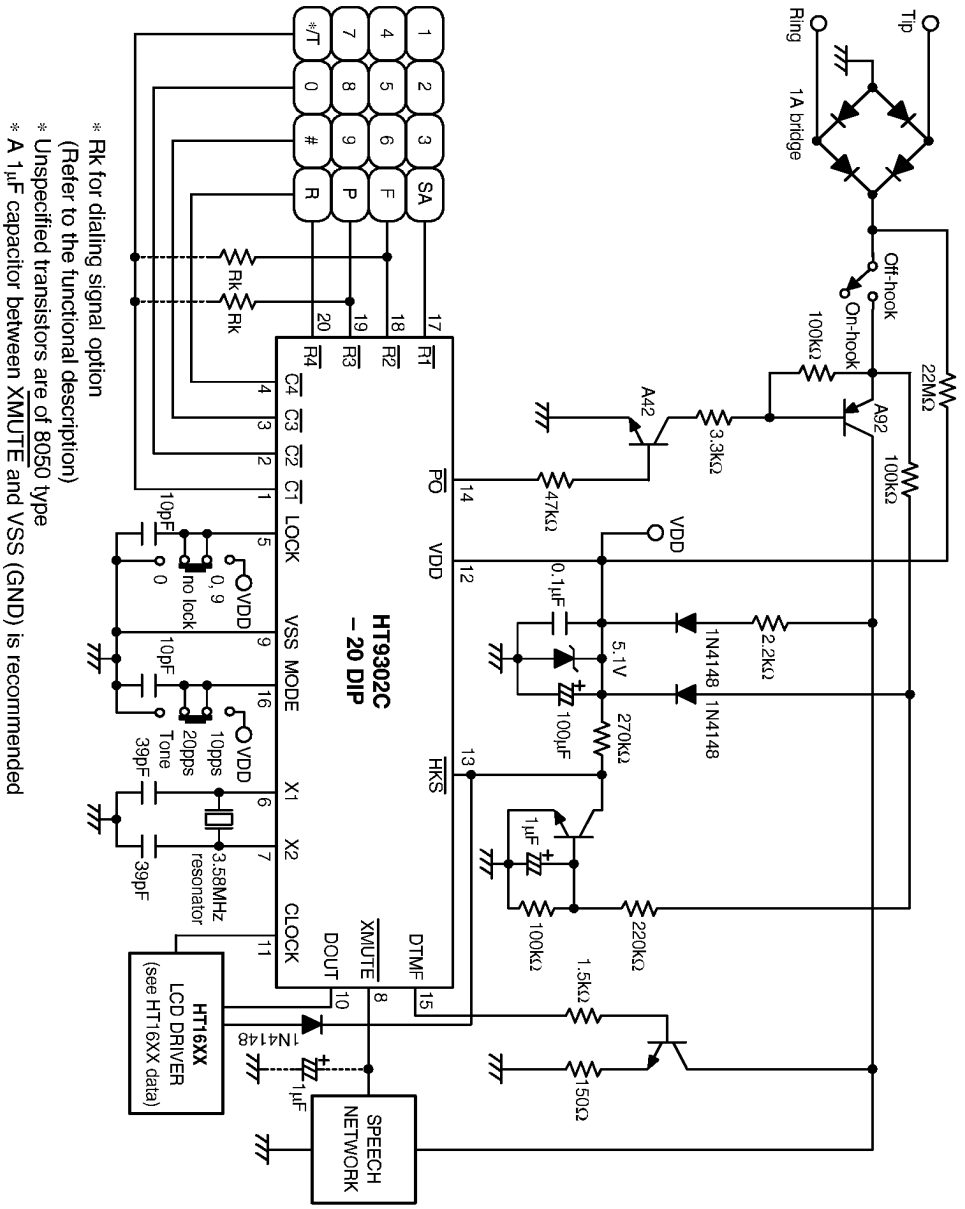

* Rk for dialing signal option
(Refer to the functional description)
* Unspecified transistors are of 8050 type
* A 1μF capacitor between XMUTE and VSS (GND) is recommended

Powered by ICminer.com Electronic-Library Service CopyRight 2003

Application circuit 4

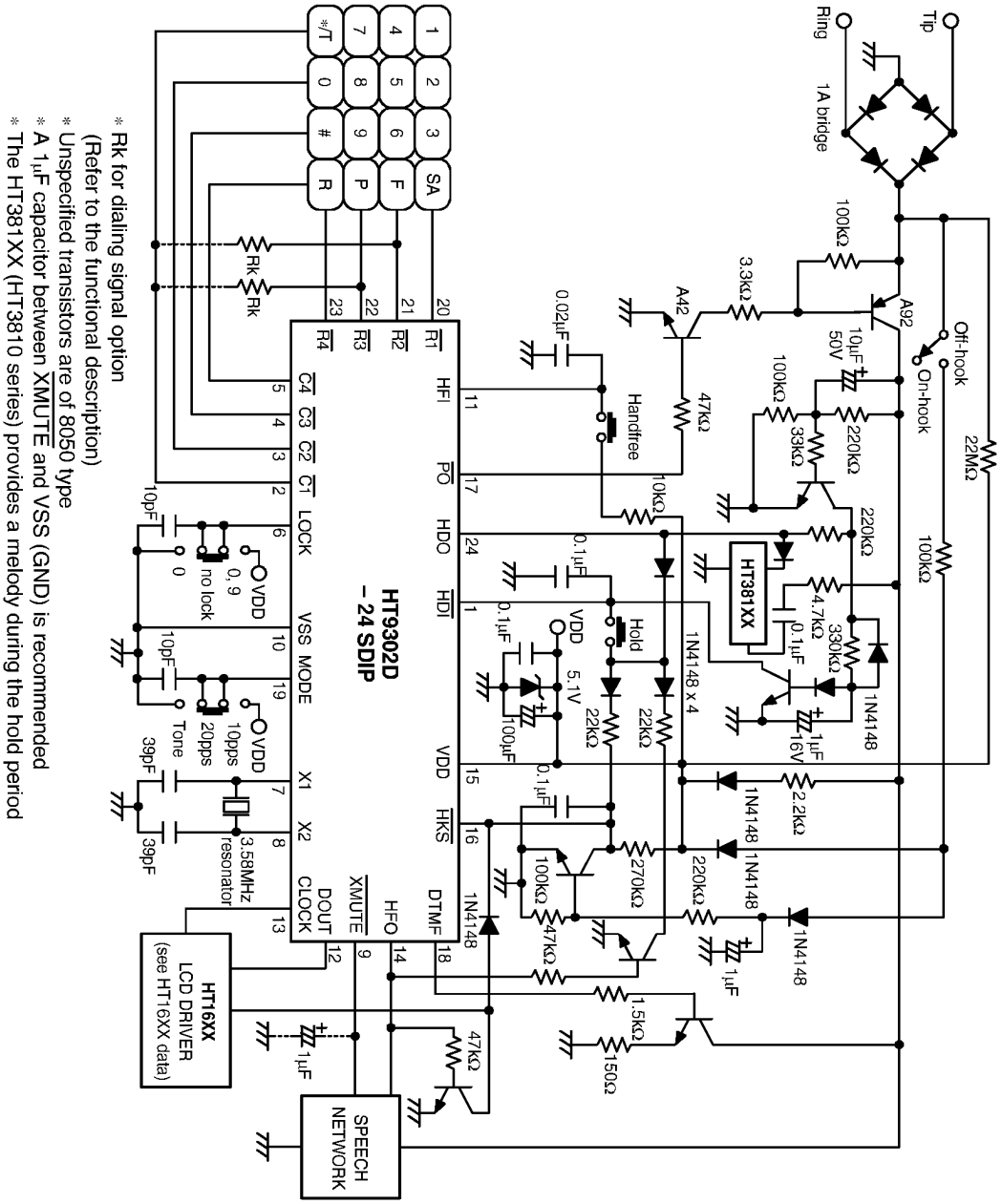

Powered by ICminer.com Electronic-Library Service CopyRight 2003

Application circuit 5

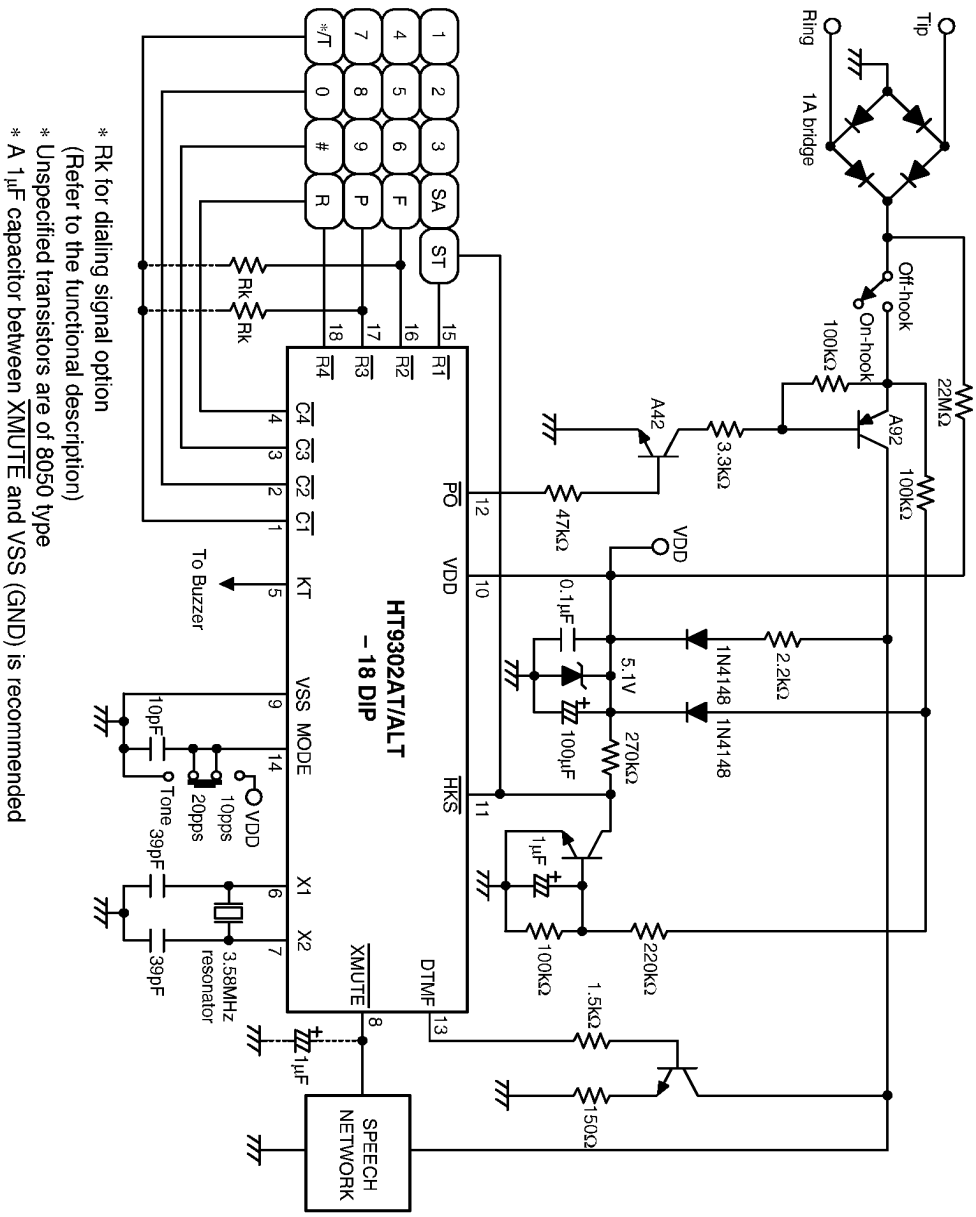

Powered by ICminer.com Electronic-Library Service CopyRight 2003

Application circuit 6

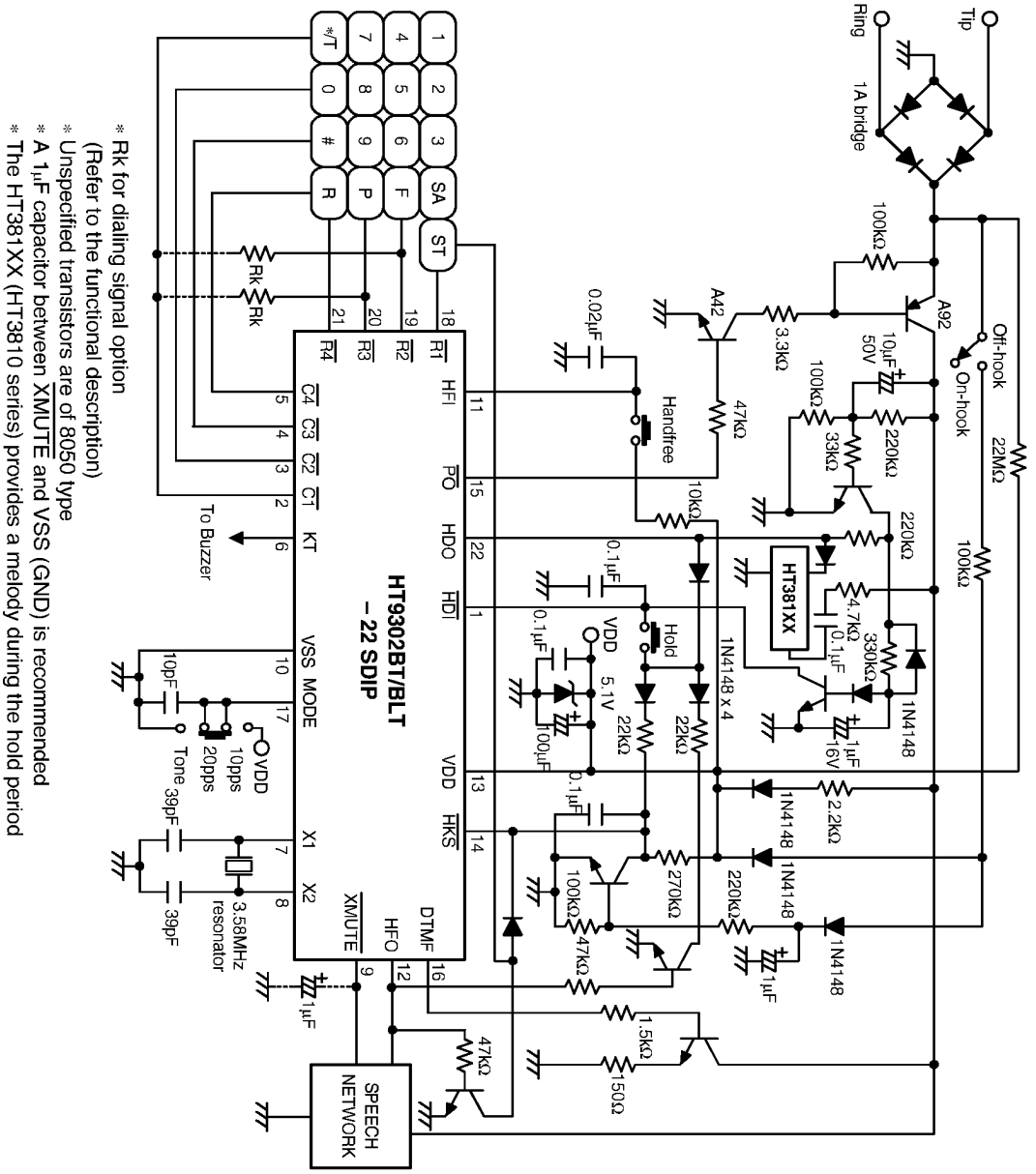

* Rk for dialing signal option
(Refer to the functional description)
* Unspecified transistors are of 8050 type
* A 1μF capacitor between XMUTE and VSS (GND) is recommended
* The HT381XX (HT3810 series) provides a melody during the hold period

Powered by ICminer.com Electronic-Library Service CopyRight 2003

Application circuit 7

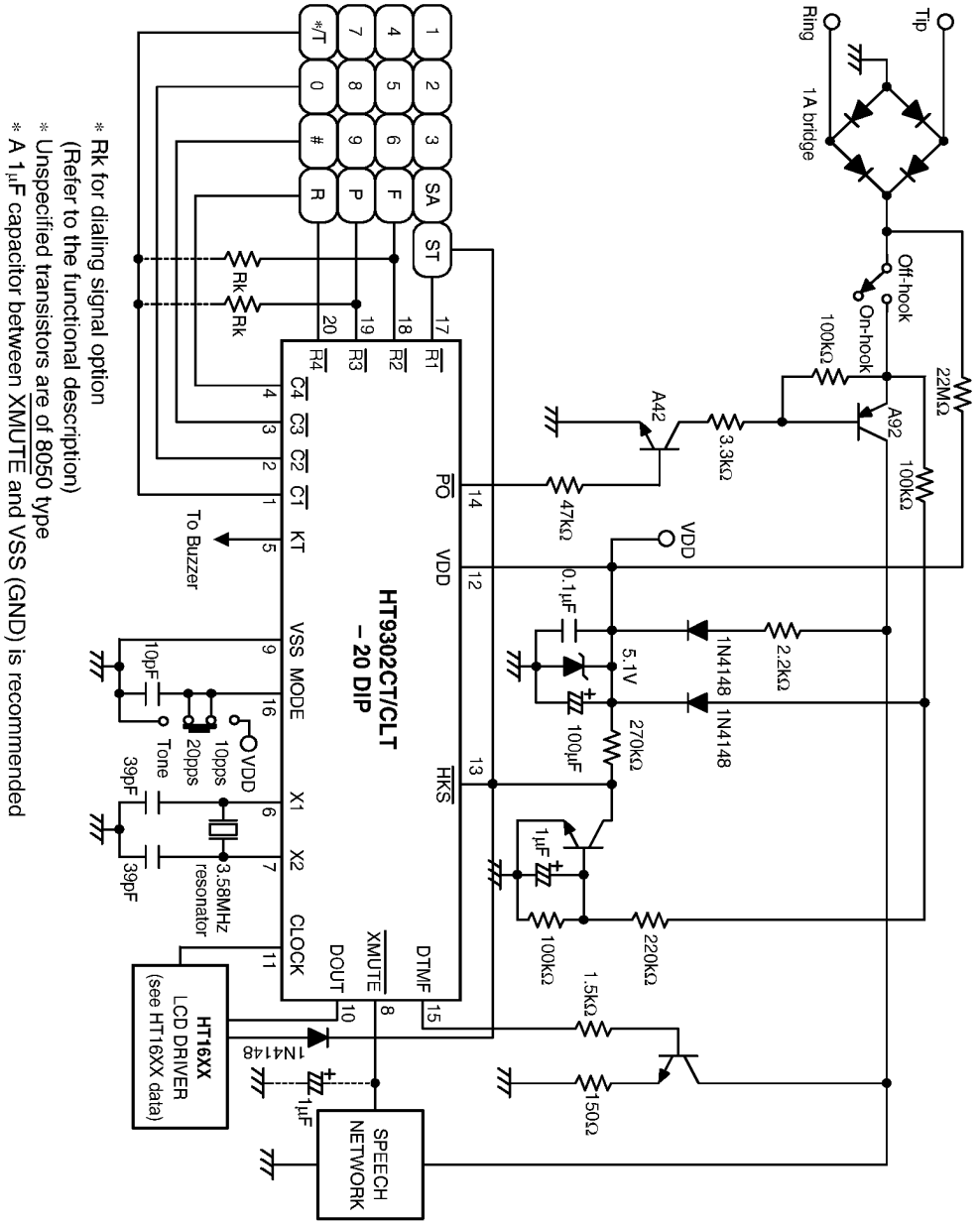

* Rk for dialing signal option
(Refer to the functional description)
* Unspecified transistors are of 8050 type
* A 1μF capacitor between XMUTE and VSS (GND) is recommended

Powered by ICminer.com Electronic-Library Service CopyRight 2003

Application circuit 8

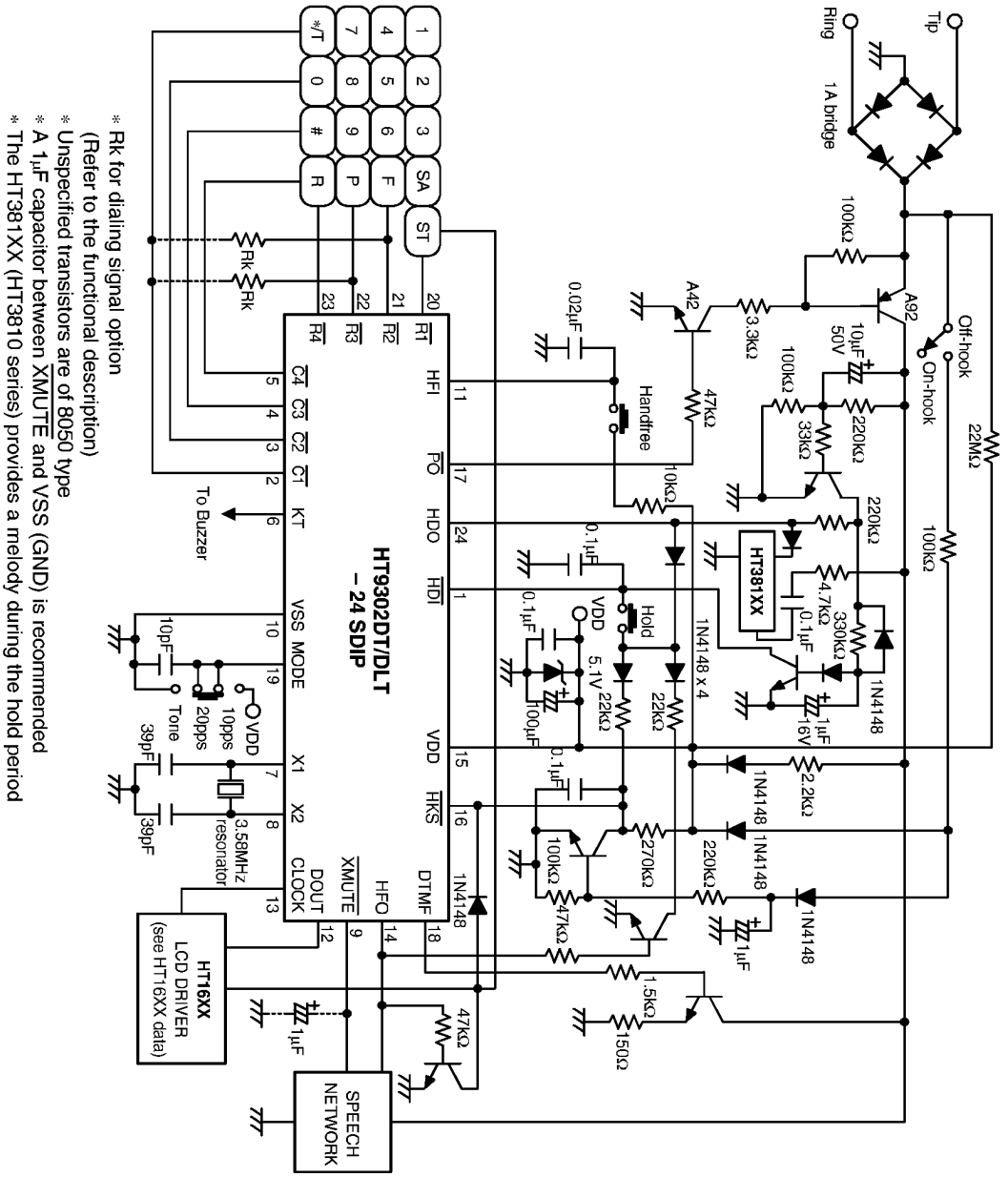

* Rk for dialing signal option
(Refer to the functional description)
* Unspecified transistors are of 8050 type
* A 1μF capacitor between XMUTE and VSS (GND) is recommended
* The HT381XX (HT3810 series) provides a melody during the hold period

Powered by ICminer.com Electronic-Library Service CopyRight 2003

Application circuit 9

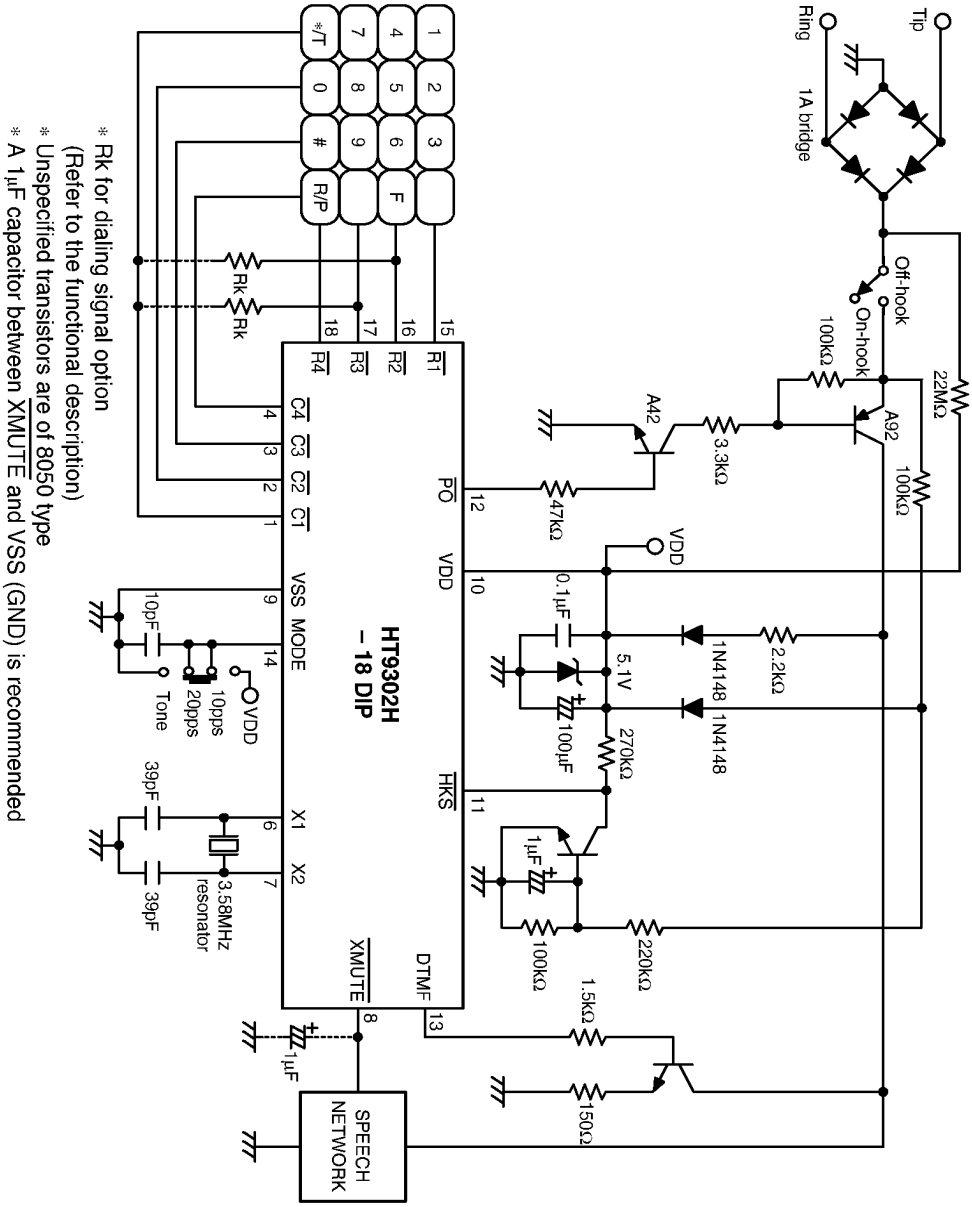

* Rk for dialing signal option
(Refer to the functional description)
* Unspecified transistors are of 8050 type
* A 1μF capacitor between XMUTE and VSS (GND) is recommended

Powered by ICminer.com Electronic-Library Service CopyRight 2003

Application circuit 10

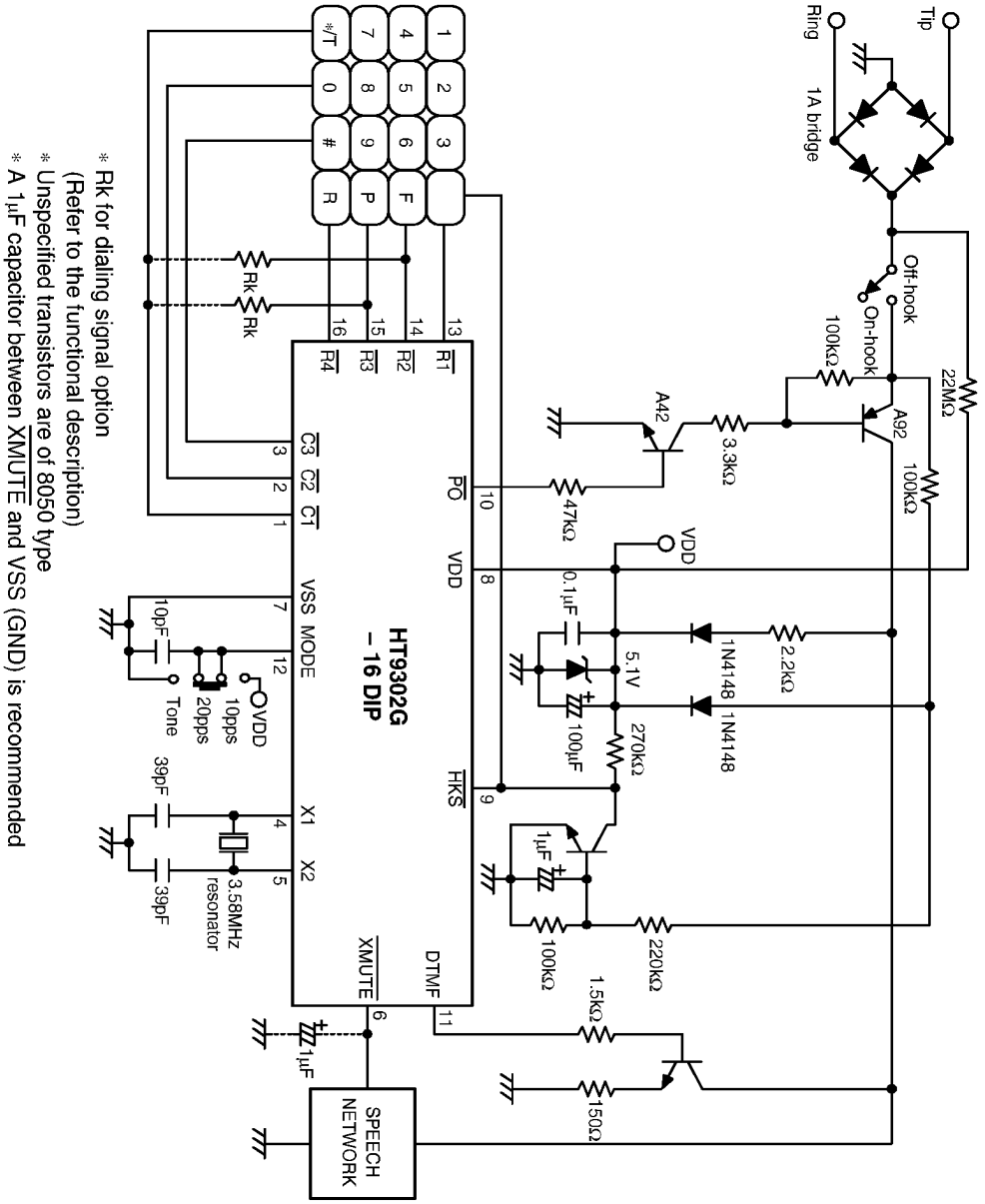

* Rk for dialing signal option
(Refer to the functional description)
* Unspecified transistors are of 8050 type
* A 1μF capacitor between $\overline{\text{XMUTE}}$ and VSS (GND) is recommended

Powered by ICminer.com Electronic-Library Service CopyRight 2003

Application circuit 11

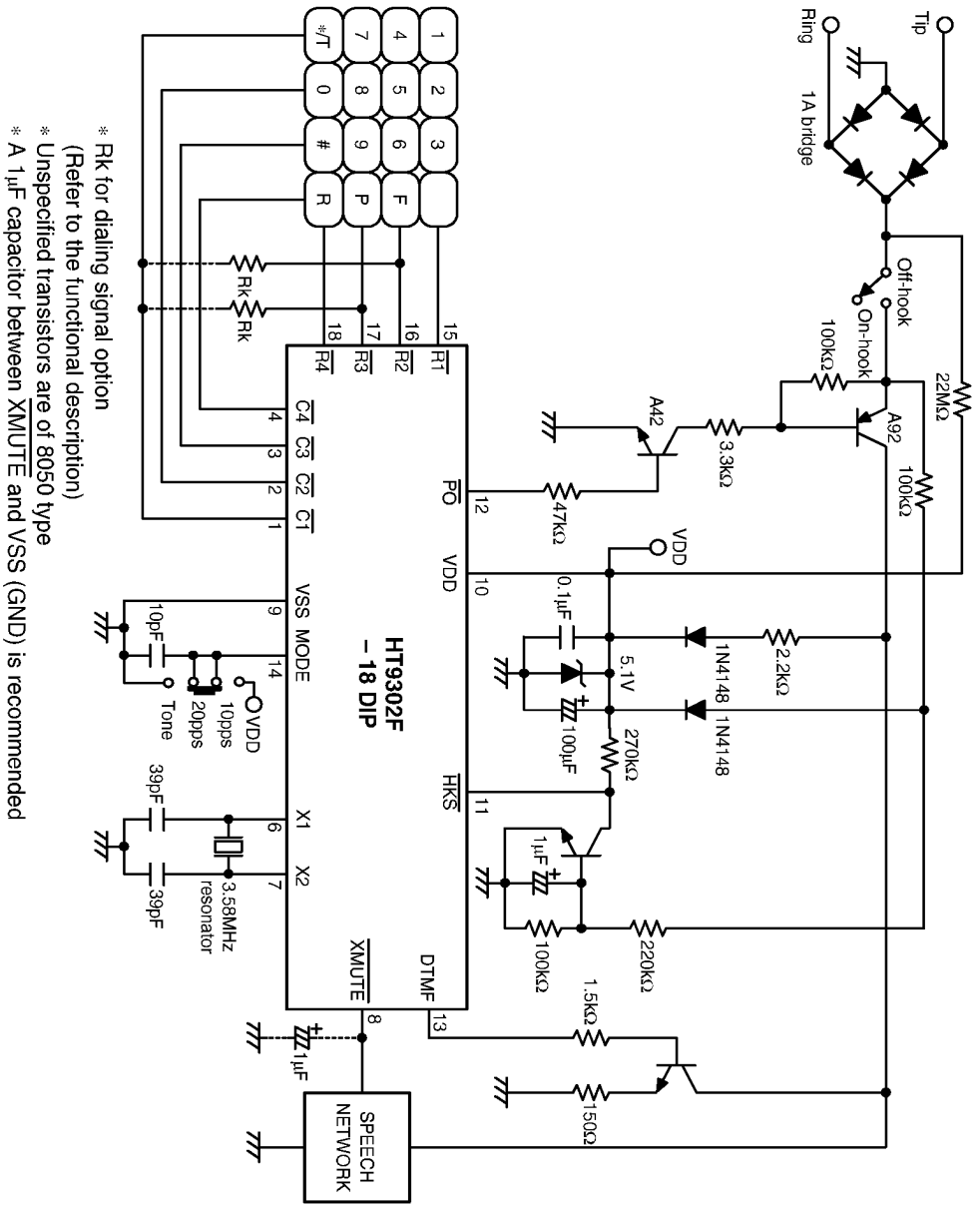

* Rk for dialing signal option
(Refer to the functional description)
* Unspecified transistors are of 8050 type
* A 1μF capacitor between XMUTE and VSS (GND) is recommended

Powered by ICminer.com Electronic-Library Service CopyRight 2003