HT9305F Series
4-Memory Tone/Pulse Dialer

Features

Patent Number: 64097, 86474, 113235(R.O.C.), 5424740(U.S.A.)

- French specification
- Operating voltage: 2.0V~5.5V
- Low standby current
- Low memory retention current: 0.1μA (Typ.)
- Tone/pulse switchable
- Interface with LCD driver
- 32 digits for redialing
- 18 digits for each memory
- One-key redialing
- Pause and P→T key for PBX
- 3.58MHz crystal or ceramic resonator
- Hand-free control
- Flash as control key only
- Hold-line control
- Pause can be saved for redialing
- Keytone function
- Resistor options:
  - M/B ratio
  - Pause duration
  - Pulse number
  - Keyboard form
- Memory number: 4 memories

General Description

The HT9305F series, originally designed to meet the French standard, are CMOS LSIs for telecommunication systems. Through resistor option matrix, the HT9305F series can be revised to meet other dialing specifications like, M/B ratio, Pause duration, Pulse number and Keyboard form.

The HT9305F series are offered in two different versions. They are HT9305Fx normal version series and HT9305FxT keytone version series.

The normal version series supply versatile functions which can be selected from the table below such as: Hold-line, Hand-free and LCD dialing number display interface, all of which are suitable for feature phone applications. The keytone version series are the same as the normal version series except that keytone function is included. The HT9305F series also provide Redial and 3 one-touch memory for speed-dialing in either pulse or tone mode.

Selection Table

Function / Item	Keytone	Hold-Line	Hand-Free	LCD Interface	Package
HT9305Fx	(Normal version)				
HT9305FA	—	—	—	—	18 DIP
HT9305FB	—	√	√	—	22 SDIP
HT9305FC	—	—	—	√	20 DIP
HT9305FD	—	√	√	√	24 SDIP
HT9305FxT	(Keytone version)				
HT9305FAT	√	—	—	—	20 DIP
HT9305FBT	√	√	√	—	24 SDIP
HT9305FCT	√	—	—	√	22 SDIP
HT9305FDT	√	√	√	√	28 SDIP

Powered by ICminer.com Electronic-Library Service CopyRight 2003

Pin Assignment

HT9305Fx version

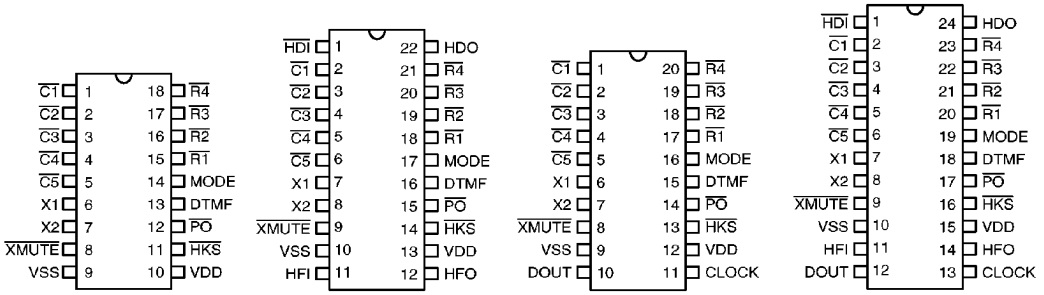

HT9305FA – 18 DIP **HT9305FB – 22 SDIP** **HT9305FC – 20 DIP** **HT9305FD – 24 SDIP**

HT9305FxT versions

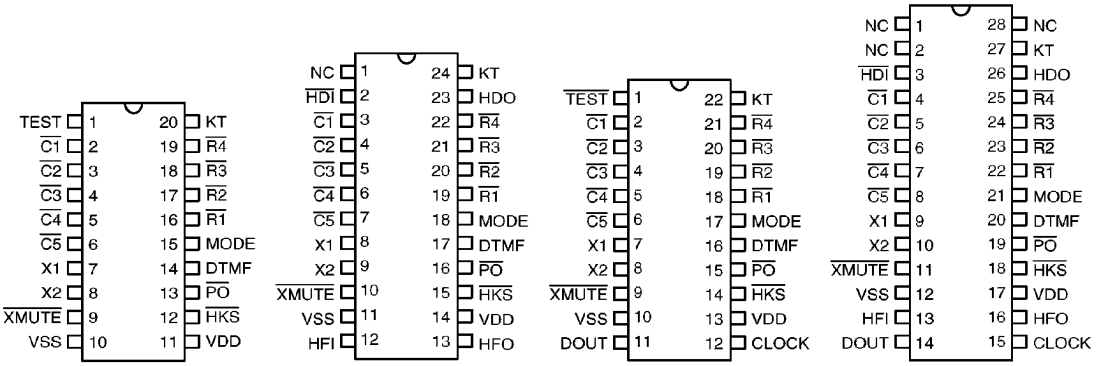

HT9305FAT – 20 DIP **HT9305FBT – 24 SDIP** **HT9305FCT – 22 SDIP** **HT9305FDT – 28 SDIP**

Keyboard Information

Form A

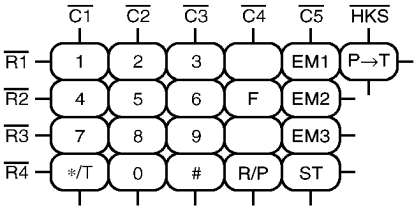

Form B

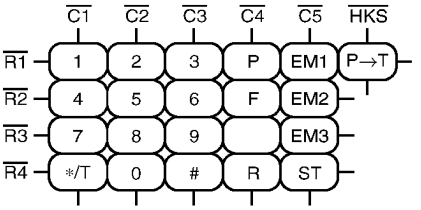

Powered by ICminer.com Electronic-Library Service CopyRight 2003

Block Diagram

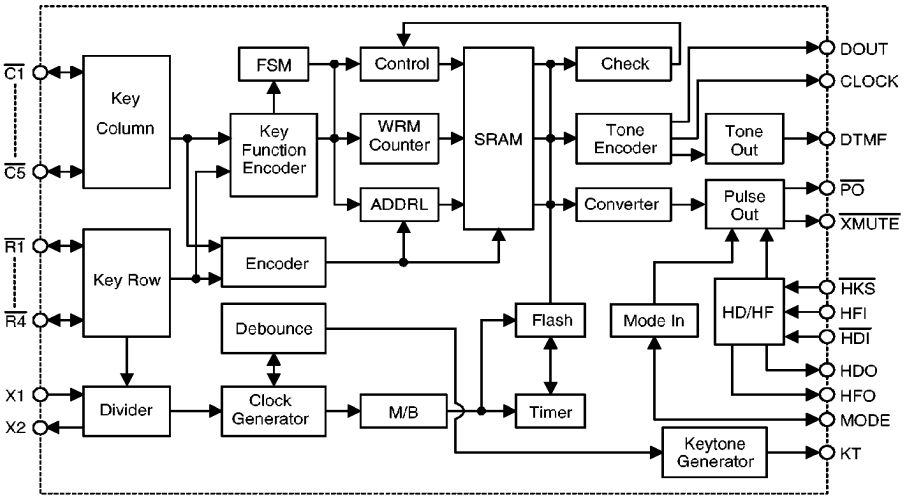

Pin Description

Pin Name	I/O	Internal Connection	Description
$\overline{C1}$~$\overline{C5}$ $\overline{R1}$~$\overline{R4}$	I/O	CMOS IN/OUT	These pins form a standard keyboard matrix which can perform keyboard input detection and dialing specification setting functions. When on-hook ($\overline{HKS}$=high) all the pins are set high. While off-hook the column group ($\overline{C1}$~$\overline{C5}$) remains low and the row group ($\overline{R1}$~$\overline{R4}$) is set high for key input detection. An inexpensive single contact standard keyboard can be used as an input device. Pressing a key connects a single column to a single row, and actuates the system oscillator that results in a dialing signal output. If more than two keys are pressed at the same time, no response occurs. The key-in debounce time is 20ms. Refer to the keyboard information for keyboard arrangement and to the functional description for dialing specification selection.
X1	I	OSCILLATOR	The system oscillator consists of an inverter, a bias resistor and the necessary load capacitor on chip. Connecting a standard 3.579545MHz crystal or ceramic resonator to the X1 and X2 terminals can implement the oscillator function. The oscillator is turned off in the standby mode, and is actuated whenever a keyboard entry is detected.
X2	O		
$\overline{XMUTE}$	O	NMOS OUT	$\overline{XMUTE}$ is an NMOS open drain structure pulled to VSS during dialing signal transmission. Otherwise, it is an open circuit. $\overline{XMUTE}$ is used to mute the speech circuit when transmitting the dial signal.

Powered by ICminer.com Electronic-Library Service CopyRight 2003

Pin Name	I/O	Internal Connection	Description
$\overline{HKS}$	I	CMOS IN	This pin is used to monitor the status of the hook-switch and its combination with HFI can control the $\overline{PO}$ pin output to make or break the line. $\overline{HKS}$=VDD: On-hook state ($\overline{PO}$=low). Except for HFI/$\overline{HDI}$ (hand-free/hold-line control input), other functions are all disabled. $\overline{HKS}$=VSS: Off-hook state ($\overline{PO}$=high). The chip is in the standby mode and ready to receive the key input.
$\overline{PO}$	O	CMOS OUT	This pin is a CMOS output structure which by receiving the $\overline{HKS}$ and HFO signals, control the dialer to connect or disconnect the telephone line. $\overline{PO}$ outputs a low to break line when $\overline{HKS}$ is high (on-hook) and HFO is low (hand-free inactive). $\overline{PO}$ outputs a high to make line when $\overline{HKS}$ is low (off-hook) or HFO is high or HDO is high. During the off-hook state, this pin also outputs the dialing pulse train in pulse mode dialing. While in the tone mode, this pin is always high.
MODE	I/O	CMOS IN/OUT	This is a three-state input/output pin, used for dialing mode selection, either Tone mode or Pulse mode, 10pps/20pps MODE=VDD: Pulse mode, 10pps MODE=OPEN: Pulse mode, 20pps MODE=VSS: Tone mode During the pulse mode dialing, switching this pin to the tone mode changes the subsequent digit entry to tone mode. When the chips are in tone mode, switching to pulse mode will also be recognized.
DTMF	O	CMOS OUT	This pin is active only when the chip transmits tone dialing signals. Otherwise, it always outputs low. The pin outputs tone signals to drive the external transmitter amplifier circuit. The load resistor should not be less than 5kΩ.
$\overline{HDI}$	I	CMOS IN Pull-High	This pin is a schmitt trigger input structure. Active low. Applying a negative going pulse to this pin can toggle the HDO output once. An external RC network is recommended for input debouncing. The pull-high resistance is 200kΩ typ.
HDO	O	CMOS OUT	The HDO is a CMOS output structure. Its output is toggle-controlled by a negative transition on $\overline{HDI}$. When HDO is toggled high, $\overline{PO}$ keeps high to hold the line. The hold function can be released by setting HFO high or by an on-off hook operation or by another $\overline{HDI}$ input. The HDO pin can directly drive the HT3810 series melody generator to produce a hold-line background melody. Refer to the functional description for the hold-line function.

Powered by ICminer.com Electronic-Library Service CopyRight 2003

Pin Name	I/O	Internal Connection	Description
KT	O	CMOS OUT	Keytone output pin. Outputs a 1.2kHz tone carrier when any key is pressed in the pulse mode or when the function keys are pressed in the tone mode.
HFI	I	CMOS IN Pull-Low	This pin is a schmitt trigger input structure. Active high. Applying a positive going pulse to HFI can toggle the HFO once and hence control the hand-free function. The pull-low resistance of HFI is 200kΩ typ. An external RC network is recommended for input debouncing.
HFO	O	CMOS OUT	The HFO is a CMOS output structure. Its output is toggle-controlled by a positive transition on the HFI pin. When HFO is high, the hand-free function is enabled and $\overline{PO}$ outputs a high to connect the line. The hand-free function can be released by an on-off-hook operation or by another HFI input or by setting HDO high. Refer to the functional description for the hand-free functional operation.
DOUT	O	NMOS OUT	NMOS open drain output pin. It outputs the BCD code of the dialing digits to the LCD driver chip (HT16XX series) or μC for dialing number display. Refer to the functional description for the detailed timing.
CLOCK	O	NMOS OUT	NMOS open drain output. When dialing, it outputs a series of pulse trains for DOUT data synchronization. DOUT data is valid at the falling edge of clock.
VDD	I	—	Positive power supply, 2.0V~5.5V for normal operation
VSS	I	—	Negative power supply

Approximate internal connection circuits

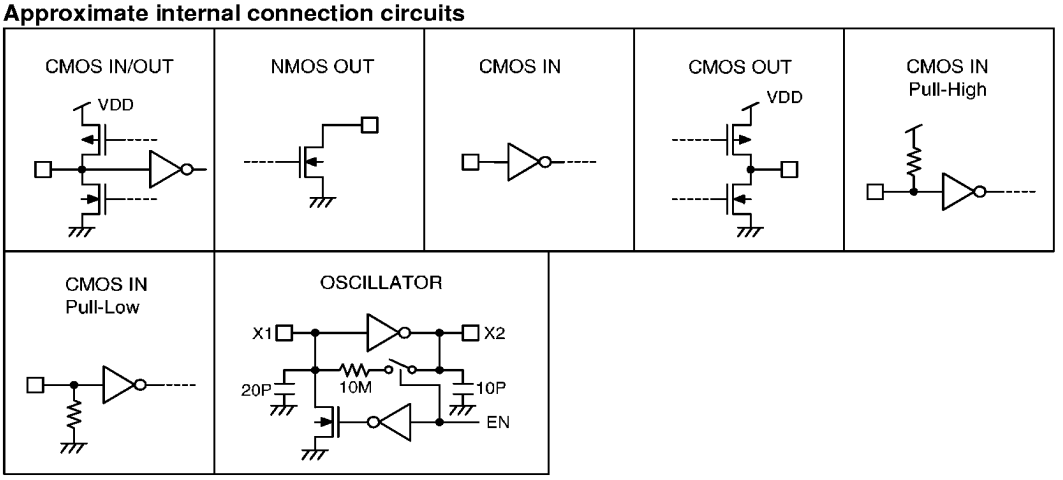

Powered by ICminer.com Electronic-Library Service CopyRight 2003

Absolute Maximum Ratings*

Supply Voltage ..... –0.3V to 6V
Storage Temperature..... –50°C to 125°C
Input Voltage..... –0.3V to V_{DD}+0.3V
Operating Temperature..... –20°C to 75°C

*Note: Stresses above those listed under "Absolute Maximum Ratings" may cause permanent damage to the device. These are stress ratings only. Functional operation of this device at these or any other conditions above those indicated in the operational sections of this specification is not implied and exposure to absolute maximum rating conditions for extended periods may affect device reliability.

Electrical Characteristics

(F_{OSC}=3.5795MHz, Ta=25°C)

Symbol	Parameter	Test Conditions			Min.	Typ.	Max.	Unit
		V_{DD}	Conditions					
V_{DD}	Operating Voltage	—	—		2	—	5.5	V
I_{DD}	Operating Current	2.5V	Pulse	Off-hook Keypad entry No load	—	0.2	1	mA
			Tone		—	0.6	2	mA
I_{STB}	Standby Current	1V	On-hook, no load No entry		—	—	1	μA
V_R	Memory Retention Voltage	—	—		1	—	5.5	V
I_R	Memory Retention Current	1V	On-hook		—	0.1	0.2	μA
V_{IL}	Input Low Voltage	—	—		V_{SS}	—	$0.2V_{DD}$	V
V_{IH}	Input High Voltage	—	—		$0.8V_{DD}$	—	V_{DD}	V
I_{XMO}	$\overline{XMUTE}$ Leakage Current	—	$V_{\overline{XMUTE}}$=12V No entry		—	—	1	μA
I_{OLXM}	$\overline{XMUTE}$ Sink Current	2.5V	$V_{\overline{XMUTE}}$=0.5V		1	—	—	mA
$I_{\overline{HKS}}$	$\overline{HKS}$ Pin Input Current	2.5V	$V_{\overline{HKS}}$=2.5V		—	—	0.1	μA
R_{HFI}	HFI Pull-Low Resistance	2.5V	V_{HFI}=2.5V		—	200	—	kΩ
$R_{\overline{HDI}}$	$\overline{HDI}$ Pull-High Resistance	2.5V	$V_{\overline{HDI}}$=0V		—	200	—	kΩ
I_{OH1}	Keypad Pin Source Current	2.5V	V_{OH}=0V		–4	—	–40	μA
I_{OL1}	Keypad Pin Sink Current	2.5V	V_{OL}=2.5V		200	400	—	μA
I_{OH2}	HFO Pin Source Current	2.5V	V_{OH}=2V		–1	—	—	mA
I_{OL2}	HFO Pin Sink Current	2.5V	V_{OL}=0.5V		1	—	—	mA
I_{OH3}	HDO Pin Source Current	2.5V	V_{OH}=2V		–1	—	—	mA
I_{OL3}	HDO Pin Sink Current	2.5V	V_{OL}=0.5V		1	—	—	mA
T_{FP}	Pause Time After Flash	—	—		—	0.2	—	s
T_F	Flash Time	—	—		—	0.3	—	s
T_{RP}	Pause Time for One-key Redialing	—	One-key redialing		—	1	—	s

Powered by ICminer.com Electronic-Library Service CopyRight 2003

Symbol	Parameter	Test Conditions		Min.	Typ.	Max.	Unit
		V_{DD}	Conditions				
T_{DB}	Key-in Debounce Time	—	—	—	20	—	ms
T_{BRK}	Break Time for One-key Redialing	—	One-key redialing	—	1.2	—	s
T_{KT}	Keytone Duration	—	—	—	34	—	ms
F_{KTC}	Keytone Frequency	—	—	—	1.2	—	kHz
F_{OSC}	System Frequency	—	Crystal=3.5795MHz	3.5759	3.5795	3.5831	MHz

Pulse Mode Electrical Characteristics

(F_{OSC}=3.5795MHz, Ta=25°C)

Symbol	Parameter	Test Conditions		Min.	Typ.	Max.	Unit
		V_{DD}	Conditions				
I_{POH}	$\overline{PO}$ Output Source Current	2.5V	V_{OH}=2V	–0.2	—	—	mA
I_{POL}	$\overline{PO}$ Output Sink Current	2.5V	V_{OL}=0.5V	0.2	0.6	—	mA
PR	Pulse Rate	—	MODE pin is connected to V_{DD}	—	10	—	pps
			MODE pin is opened	—	20	—	
M/B	Make/Break Ratio	—	A resistor is linked between $\overline{R2}$ and $\overline{C1}$	—	33:66	—	%
			No resistor is linked between $\overline{R2}$ and $\overline{C1}$	—	40:60	—	
T_{PDP}	Pre-digit-pause Time	—	M/B ratio=40:60	—	40 (10pps) 20 (20pps)	—	ms
			M/B ratio=33:66	—	33 (10pps) 17 (20pps)	—	
T_{IDP}	Inter-digit-pause Time	—	Pulse rate=10pps	—	800	—	ms
			Pulse rate=20pps	—	500	—	
T_M	Pulse Make Duration	—	A resistor is linked between $\overline{R2}$ and $\overline{C1}$	—	33 (10pps) 17 (20pps)	—	ms
			No resistor is linked between $\overline{R2}$ and $\overline{C1}$	—	40 (10pps) 20 (20pps)	—	
T_B	Pulse Break Duration	—	A resistor is linked between $\overline{R2}$ and $\overline{C1}$	—	66 (10pps) 33 (20pps)	—	ms
			No resistor is linked between $\overline{R2}$ and $\overline{C1}$	—	60 (10pps) 30 (20pps)	—	

Powered by ICminer.com Electronic-Library Service CopyRight 2003

Tone Mode Electrical Characteristics

(F_{OSC}=3.5795MHz, Ta=25°C)

Symbol	Parameter	Test Conditions		Min.	Typ.	Max.	Unit
		V_{DD}	Conditions				
V_{TDC}	DTMF Output DC Level	—	—	0.45V_{DD}	—	0.7V_{DD}	V
I_{TOL}	DTMF Sink Current	2.5V	V_{DTMF}=0.5V	0.1	—	—	mA
V_{TAC}	DTMF Output AC Level	—	Row group, R_L=5kΩ	0.12	0.155	0.18	Vrms
R_L	DTMF Output Load	2.5V	THD≤–23dB	5	—	—	kΩ
A_{CR}	Column Pre-emphasis	2.5V	Row group=0dB	1	2	3	dB
THD	Tone Signal Distortion	2.5V	R_L=5kΩ	—	–30	–23	dB
T_{TMIN}	Minimum Tone Duration	—	Auto-redial	—	82.5	—	ms
T_{ITPM}	Minimum Inter-tone Pause	—	Auto-redial	—	85.5	—	ms

$$\text{THD (Distortion) (dB)} = 20 \log \left(\sqrt{V1^2 + V2^2 + \ldots + Vn^2} \,/\, \sqrt{Vi^2 + Vh^2} \right)$$

Vi, Vh: Row group and column group signals

V1, V2, ... Vn: Harmonic signals (BW=300Hz~3500Hz)

Functional Description

Keyboard matrix

$\overline{C1}$~$\overline{C5}$ and $\overline{R1}$~$\overline{R4}$ form a keyboard matrix. Together with a 4×5+1 keyboard, the keyboard matrix is used for dialing entries. In addition, the keyboard matrix provides resistor options for different dialing specification selections. The keyboard arrangement for the HT9205FA/ FB/FC/FD are shown in **Keyboard Information**.

Tone frequency

Tone Name	Output Frequency (Hz)		% Error
	Specified	Actual	
$\overline{R1}$	697	699	+0.29%
$\overline{R2}$	770	766	–0.52%
$\overline{R3}$	852	847	–0.59%
$\overline{R4}$	941	948	+0.74%
$\overline{C1}$	1209	1215	+0.50%
$\overline{C2}$	1336	1332	–0.30%
$\overline{C3}$	1477	1472	–0.34%

Note: % Error does not contain the crystal frequency drift

Powered by ICminer.com Electronic-Library Service CopyRight 2003

Dialing specification selection

Various dialing specifications can be selected by adding resistors across keyboard matrix pins. The allowable option resistor connections are shown below.

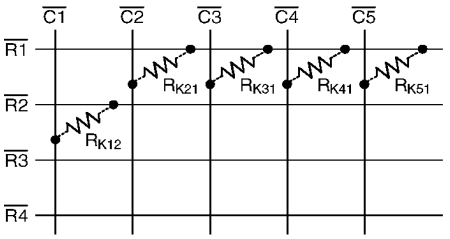

All the resistors are 330kΩ. The resistor option functions and the default specifications (without option resistors) are listed below.

Option Resistor	Option Function	Default (No Resistor)
R_{K12}	Make/Break Ratio Selection	40:60
R_{K21}	Pause Duration Selection	T_P= 2s
R_{K31}	Pulse Number Selection	N
R_{K41}		
R_{K51}	Keypad Form	Form A

M/B ratio selection table

R_{K12}	M/B Ratio (%)
No	40:60
Yes	33.3:66.6

Pause duration selection table

R_{K21}	T_P (sec)
No	2
Yes	3.6

Pulse number selection table

R_{K31}	R_{K41}	Pulse Number
No	No	N
No	Yes	N+1
Yes	No	10-N
Yes	Yes	—

The keyboard arrangement selection table

R_{K51}	Keypad Form
No	Form A (see keyboard information)
Yes	Form B (see keyboard information)

Pulse number table

Keypad	Output Pulse Number		
Digit Key	N	10–N	N+1
1	1	9	2
2	2	8	3
3	3	7	4
4	4	6	5
5	5	5	6
6	6	4	7
7	7	3	8
8	8	2	9
9	9	1	10
0	10	10	1
*/T	P→T	P→T	P→T
#	Ignored	Ignored	Ignored

Powered by ICminer.com Electronic-Library Service CopyRight 2003

Tone duration and pause in redial function

Parameter	Symbol	Typ.	Unit
Minimum Tone Duration	T_{TMIN}	82.5	ms
Minimum Inter-tone Pause	T_{ITPM}	85.5	ms
Cycle Time	T_C	168	ms

Hand-free function operation

- Hand-free function execution
  When HFO is low, a rising edge triggers the HFI, enabling the Hand-free function (HFO becomes high).
- Reset Hand-free function
  When HFO is high, the Hand-free function is enabled and can be reset by:
  - Off-hook
  - Applying a rising edge to HFI
  - Changing the HDO pin from low to high
- Hand-free function table

Current State			Input			Next State	
$\overline{HKS}$	HFO	HDO	$\overline{HDI}$	HFI	$\overline{HKS}$	HFO	HDO
H	L	X	H	L	An	L	An
H	L	X	H	↑	An	H	L
H	H	X	H	↑	An	L	An
H	X	L	H	L	L	L	L
L	L	X	H	L	An	L	An
L	L	X	H	↑	An	H	L
L	H	L	H	↑	An	L	An
L	X	X	H	L	H	An	An
X	X	L	↓	L	An	L	H

H: Logic HIGH X: Don't care ↑: Rising edge
L: Logic LOW An: Unchanged ↓: Falling edge

Hold-line function operation

- Hold-line function execution
  When HDO is low, a falling edge triggers the $\overline{HDI}$, enabling the Hold-line function (HDO becomes high). The $\overline{XMUTE}$ remains low when HDO is high.
- Reset Hold-line function
  When HDO is high, the Hold-line function is enabled and can be reset by:
  - Off-hook
  - Applying a falling edge to $\overline{HDI}$
  - Changing the HFO pin from low to high
- Hold-line function table

Current State			Input			Next State	
$\overline{HKS}$	HDO	HFO	HFI	$\overline{HDI}$	$\overline{HKS}$	HDO	HFO
H	L	X	L	H	An	L	An
H	L	X	L	↓	An	H	L
H	H	L	L	↓	An	L	An
H	X	X	L	H	L	L	L
L	L	X	L	H	An	L	An
L	L	X	L	↓	An	H	L
L	H	L	L	↓	An	L	An
L	X	X	L	H	H	An	An
X	X	L	↑	H	An	L	H

H: Logic HIGH X: Don't care ↑: Rising edge
L: Logic LOW An: Unchanged ↓: Falling edge

Powered by ICminer.com Electronic-Library Service CopyRight 2003

DOUT BCD code

When dialing, the corresponding 4-bit BCD codes are serially presented on DOUT from MSB to LSB. The data of DOUT is valid at the falling edge of the CLOCK pin. The following table lists the BCD codes corresponding to the keyboard input.

Key-In	BCD Code	Key-In	BCD Code
1	0001	8	1000
2	0010	9	1001
3	0011	0	1010
4	0100	*/T	1101
5	0101	#	1100
6	0110	F	1011
7	0111	P	1110

Key definition

- 0,1,2,3,4,5,6,7,8,9 keys
  These are dialing number input keys for both the pulse mode and the tone mode operations.
- */T
  This key executes the P→T and * tone output functions in the pulse mode. On the other hand, the */T key executes the * function in the tone mode.
- P→T
  The key executes the P→T function in the pulse mode. No response in the tone mode.
- #
  This is a dialing signal key for the tone mode only, no response in the pulse mode.
- F
  The flash key is a control key. Pressing the flash key will force the $\overline{PO}$ pin to be "low" for the T_F (0.3 sec) duration and is then followed by T_{FP} (0.2 sec). During the dialing signal transmission, the F key is inhibited.
- P
  Pause key. The execution of this key pauses the output for the T_P duration. T_P can be selected by R_{K21}.
- R
  Redial key. Executes redialing as well as one-key redial function.
- R/P
  Redial and pause function key. If it is pressed as the first key after off-hook, this key executes the redial function. Otherwise, it works as the pause key.
- ST
  Store key. The execution of this key actuates the store memory function with (or without) dialing output. During the dialing signal transmission, the ST key is inhibited.
- EM1~EM3
  One-touch memory dialing key. For speed-calling convenience, they provide memory dialing in either pulse or tone mode.

Powered by ICminer.com Electronic-Library Service CopyRight 2003

Keyboard operation

The following operations are described under an on-off-hook or on-hook condition with the hand-free active condition.

- Normal dialing

– Pulse mode

(a) without */T, P→T

Keyboard input: [D1] [D2] ... [Dn]

Dialing output: D1 D2 ... Dn

RM: D1 D2 ... Dn

(b) with */T

Keyboard input: [D1] [D2] ... [Dn] [*/T] [Dn+1] ... [Dm]

Dialing output: $\underbrace{\text{D1 D2 ... Dn}}_{\text{Pulse}}$ * $\underbrace{\text{Dn+1 ... Dm}}_{\text{Tone}}$

RM: D1 D2 ... Dn */T Dn+1 ... Dm

(c) with P→T

Keyboard input: [D1] [D2] ... [Dn] [P→T] [Dn+1] ... [Dm]

Dialing output: $\underbrace{\text{D1 D2 ... Dn}}_{\text{Pulse}}$ $\underbrace{\text{Dn+1 ... Dm}}_{\text{Tone}}$

RM: D1 D2 ... Dn P→T Dn+1 ... Dm

– Tone mode

(a) without */T, P→T

Keyboard input: [D1] [D2] ... [Dn]

Dialing output: D1 D2 ... Dn

RM: D1 D2 ... Dn

(b) with */T

Keyboard input: [D1] [D2] ... [Dn] [*/T] [Dn+1] ... [Dm]

Dialing output: D1 D2 ... Dn * Dn+1 ... Dm

RM: D1 D2 ... Dn * Dn+1 ... Dm

(c) with P→T

Keyboard input: [D1] [D2] ... [Dn] [P→T] [Dn+1] ... [Dm]

Dialing output: D1 D2 ... Dn Dn+1 ... Dm

RM: D1 D2 ... Dn Dn+1 ... Dm

Note: The maximum capacity of the RM memory is 32 digits. When more than 32 digits are entered, the signal is transmitted but the redial function is inhibited.

- Redial

– Pulse mode

(a) without */T, P→T

RM content: D1 D2 ... Dn

Keyboard input: [R]

Dialing output: D1 D2 ... Dn

RM: Unchanged

(b) with */T

RM content: D1 D2 ... Dn */T Dn+1 ... Dm

Keyboard input: [R]

Dialing output: $\underbrace{\text{D1 D2 ... Dn}}_{\text{Pulse}}$

RM: Unchanged

(c) with P→T

RM content: D1 D2 ... Dn P→T Dn+1 ... Dm

Keyboard input: [R]

Dialing output: $\underbrace{\text{D1 D2 ... Dn}}_{\text{Pulse}}$

RM: Unchanged

– Tone mode

(a) without */T, P→T

RM content: D1 D2 ... Dn

Keyboard input: [R]

Dialing output: D1 D2 ... Dn

RM: Unchanged

(b) with */T

RM content: D1 D2 ... Dn */T Dn+1 ... Dm

Keyboard input: [R]

Dialing output: D1 D2 ... Dn * Dn+1 ... Dm

RM: Unchanged

(c) with P→T

RM content: D1 D2 ... Dn P→T Dn+1 ... Dm

Keyboard input: [R]

Dialing output: D1 D2 ... Dn Dn+1 ... Dm

RM: Unchanged

Note: If the dialing number exceeds 32 digits, redialing is inhibited and $\overline{PO}$=VDD

Powered by ICminer.com Electronic-Library Service CopyRight 2003

- One-key redial

  – Pulse mode

  (a) without ∗/T, P→T

  Keyboard input: [D1] [D2] ... [Dn] [R]

  Dialing output: $\underbrace{D1\ D2 \ldots Dn}_{Pulse}$ TBRK TRP $\underbrace{D1\ D2 \ldots Dn}_{Pulse}$

  RM: D1 D2 ... Dn

  (b) with ∗/T

  Keyboard input: [D1] [D2] ... [Dn] [∗/T] [Dn+1] ... [Dm] [R]

  Dialing output: $\underbrace{D1\ D2 \ldots Dn}_{Pulse}$ ∗ $\underbrace{Dn+1 \ldots Dm}_{Tone}$

  TBRK TRP $\underbrace{D1\ D2 \ldots Dn}_{Pulse}$

  RM: D1 D2 ... Dn ∗/T Dn+1 ... Dm

  (c) with P→T

  Keyboard input: [D1] [D2] ... [Dn] [P→T] [Dn+1] ... [Dm] [R]

  Dialing output: $\underbrace{D1\ D2 \ldots Dn}_{Pulse}$ $\underbrace{Dn+1 \ldots Dm}_{Tone}$ TBRK TRP

  $\underbrace{D1\ D2 \ldots Dn}_{Pulse}$

  RM: D1 D2 ... Dn P→T Dn+1 ... Dm

  – Tone mode

  (a) without ∗/T

  Keyboard input: [D1] [D2] ... [Dn] [R]

  Dialing output: D1 D2 ... Dn TBRK TRP D1 D2 ... Dn

  RM: D1 D2 ... Dn

  (b) with ∗/T

  Keyboard input: [D1] [D2] ... [Dn] [∗/T] [Dn+1] ... [Dm] [R]

  Dialing output: D1 D2 ... Dn ∗ Dn+1 ... Dm

  TBRK TRP D1 D2 ... Dn ∗ Dn+1 ... Dm

  RM: D1 D2 ... Dn ∗ Dn+1 ... Dm

  (c) with P→T

  Keyboard input: [D1] [D2] ... [Dn] [P→T] [Dn+1] ... [Dm] [R]

  Dialing output: D1 D2 ... Dn Dn+1 ... Dm

  TBRK TRP D1 D2 ... Dn Dn+1 ... Dm

  RM: D1 D2 ... Dn Dn+1 ... Dm

  Note: If the dialing number exceeds 32 digits, redialing is inhibited and $\overline{PO}$=VDD

- Memory store

  – Without dialing output

  Keyboard input: [ST] [D1] [D2] ... [Dn] [ST] [EMa]

  Dialing output:

  EMa: D1 D2 ... Dn

  RM: D1 D2 ... Dn

  – With dialing output

  Keyboard input: [D1] [D2] ... [Dn] [ST] [ST] [EMa]

  Dialing output: D1 D2 ... Dn

  EMa: D1 D2 ... Dn

  RM: D1 D2 ... Dn

  Note: If the dialing number exceeds 32 digits, the memory store is inhibited.
  However, if the dialing number is not more than 32 digits the memory will store a max. of 18 digits.
  EMa=EM1~EM3.

- Memory dialing

  EMa content: D1 D2 ... Dn

  Keyboard input: [EMa]

  Dialing output: D1 D2 ... Dn

  EMa: Unchanged

  RM: D1 D2 ... Dn

  Note: EMa=EM1~EM3

Powered by ICminer.com Electronic-Library Service CopyRight 2003

- Chain dialing

  EM1 content: D1 D2 ... Dn
  EM2 content: Dn+1 ... Dm
  Keyboard input: [D1] [D2] [D3] [EM1] [EM2]
  Dialing output: D1 D2 D3 D1 D2 ... Dn Dn+1 ... Dm
  EM1/EM2: Unchanged
  RM: D1 D2 D3 D1 D2 ... Dn Dn+1 ... Dm

  Note: The maximum capacity of the RM memory is 32 digits. When the dialing number exceeds 32 digits, redialing is inhibited and $\overline{PO}$=VDD

- Flash

  – Flash as a control key

  Keyboard input: [D1] [D2] ... [Dn] [F] [Dn+1] ... [Dm]
  Dialing output: D1 D2 ... Dn T_F (break a flash time) T_{FP} Dn+1 ... Dm
  RM: Dn+1 ... Dm

- Pause

  Keyboard input: [D1] [D2] ... [Dn] [[P] or [R/P]] [Dn+1] ... [Dm]
  Dialing output: D1 D2 ... Dn T_P Dn+1 ... Dm
  RM: D1 D2 ... Dn P Dn+1 ... Dm

- Note:

  RM: Redial memory
  D1 D2 ... Dn: 0~9
  Dn+1 ... Dm: 0~9, *, #

Powered by ICminer.com Electronic-Library Service CopyRight 2003

Timing Diagrams

Normal dialing

• Pulse mode

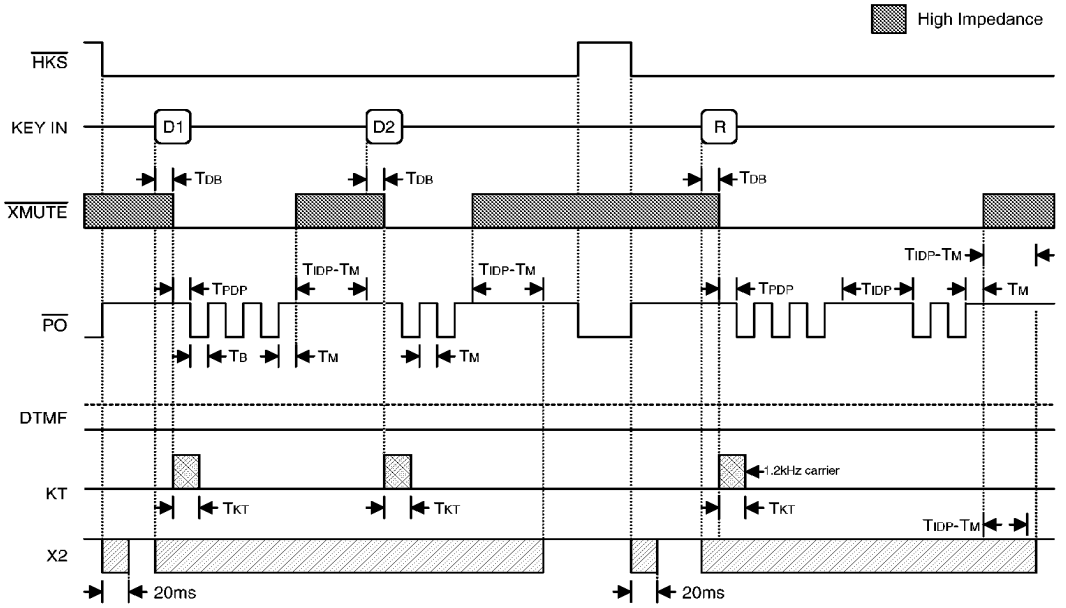

• Tone mode

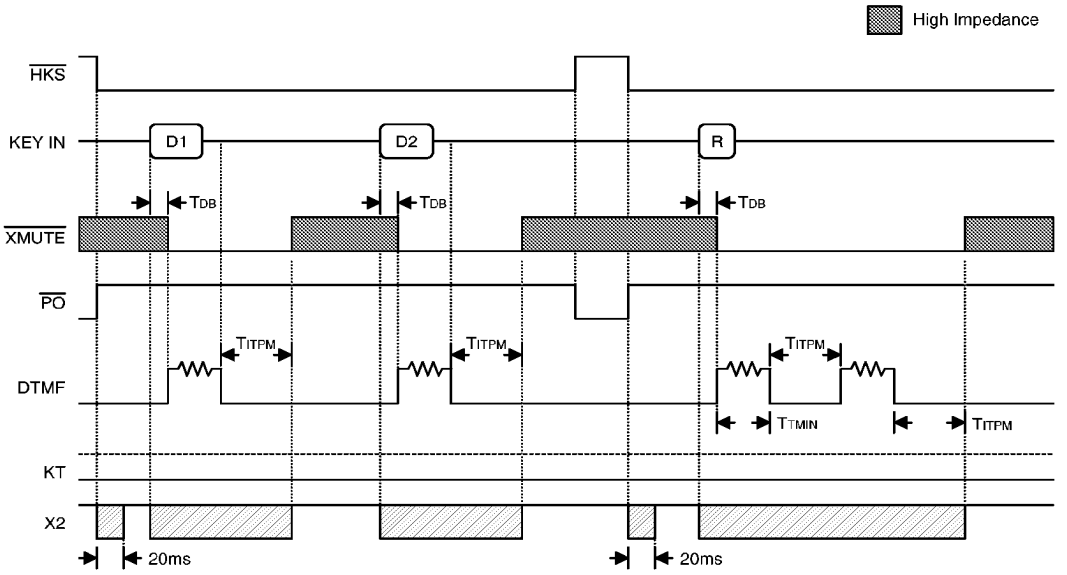

Powered by ICminer.com Electronic-Library Service CopyRight 2003

Dialing with pause key

• Pulse mode

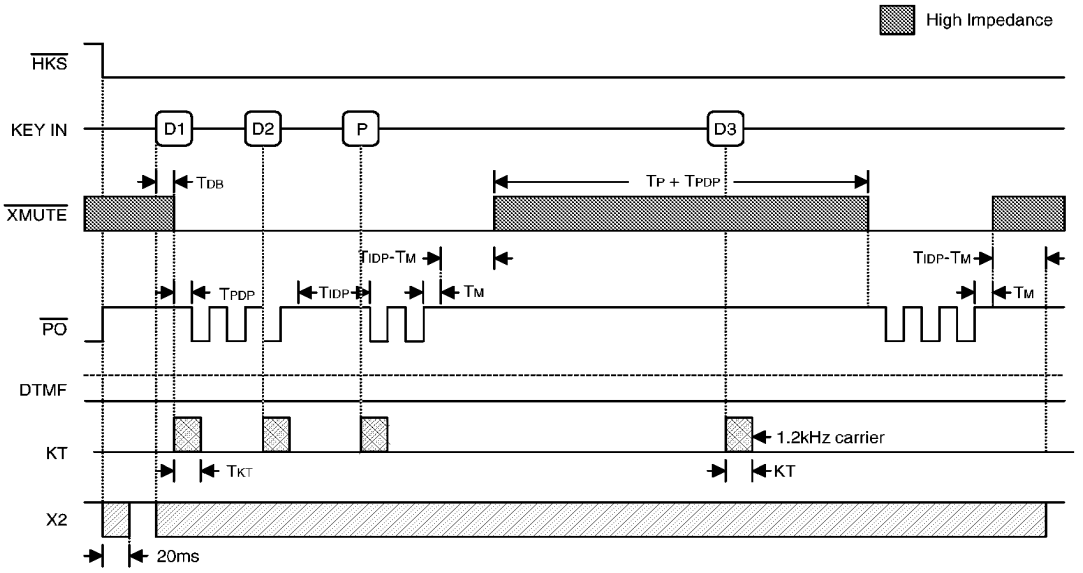

• Tone mode

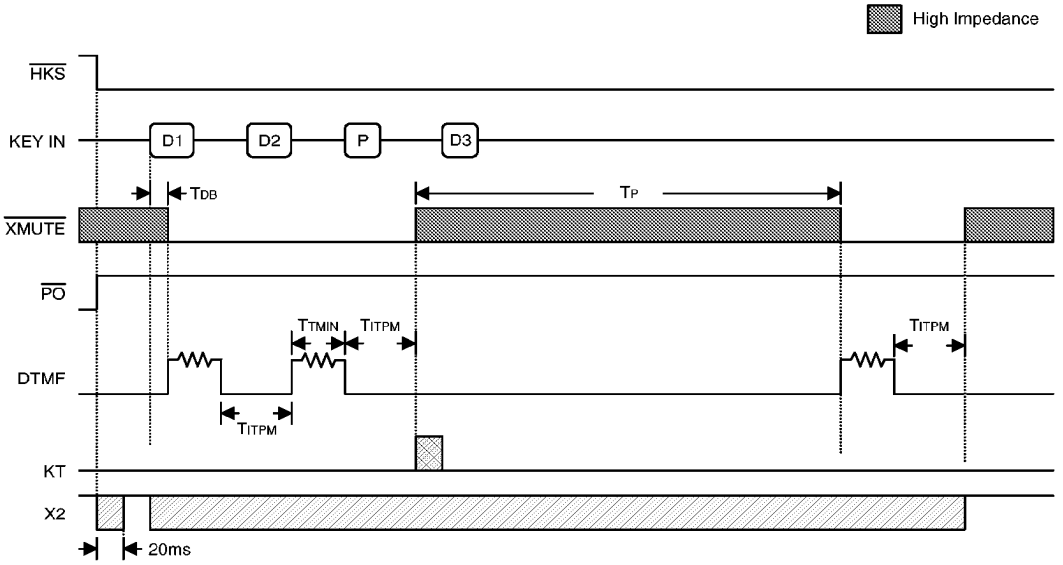

Powered by ICminer.com Electronic-Library Service CopyRight 2003

Flash key operation

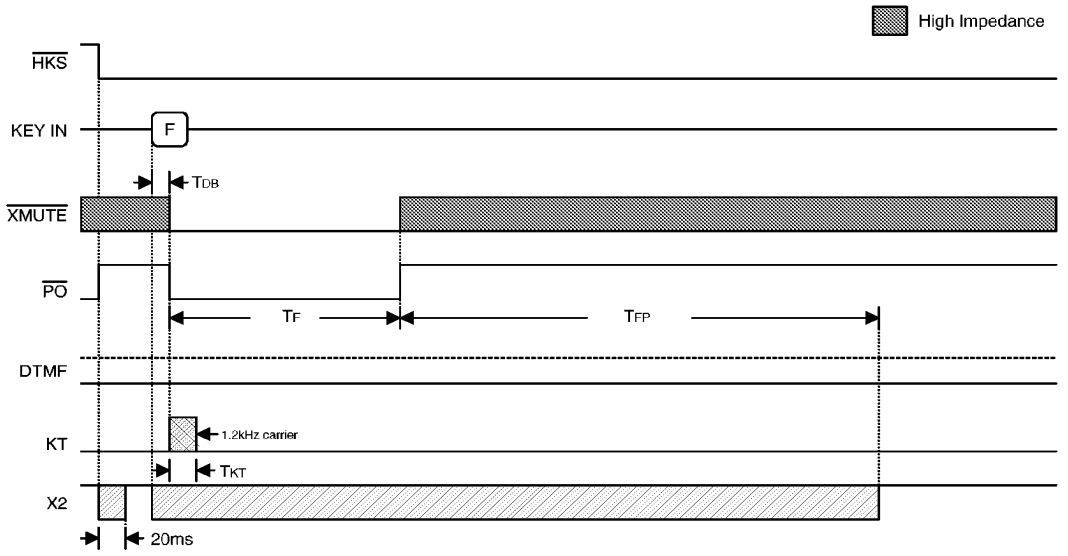

Pulse→Tone operation

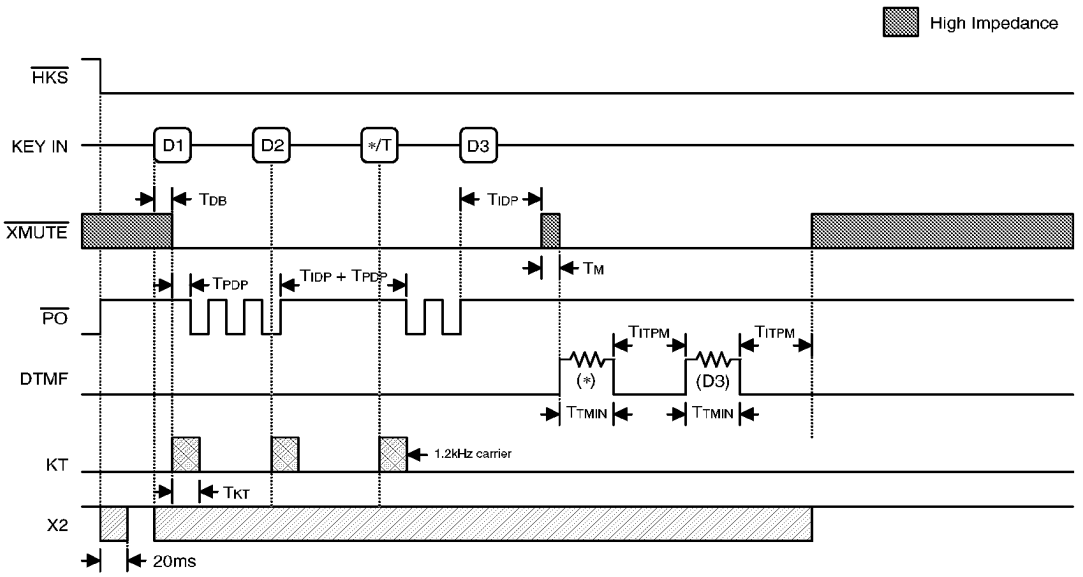

Powered by ICminer.com Electronic-Library Service CopyRight 2003

One key redial operation

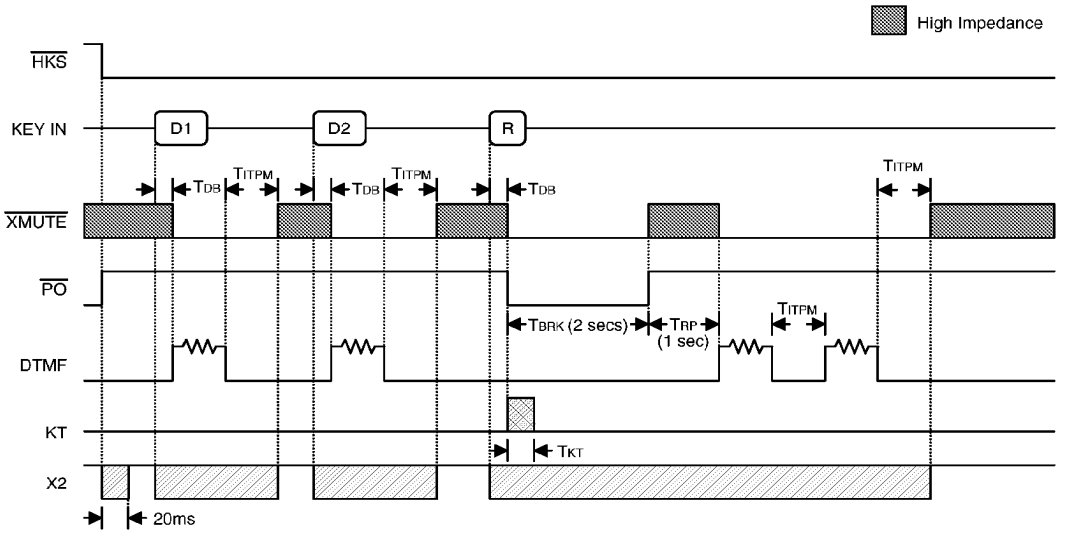

CLOCK & DOUT operation

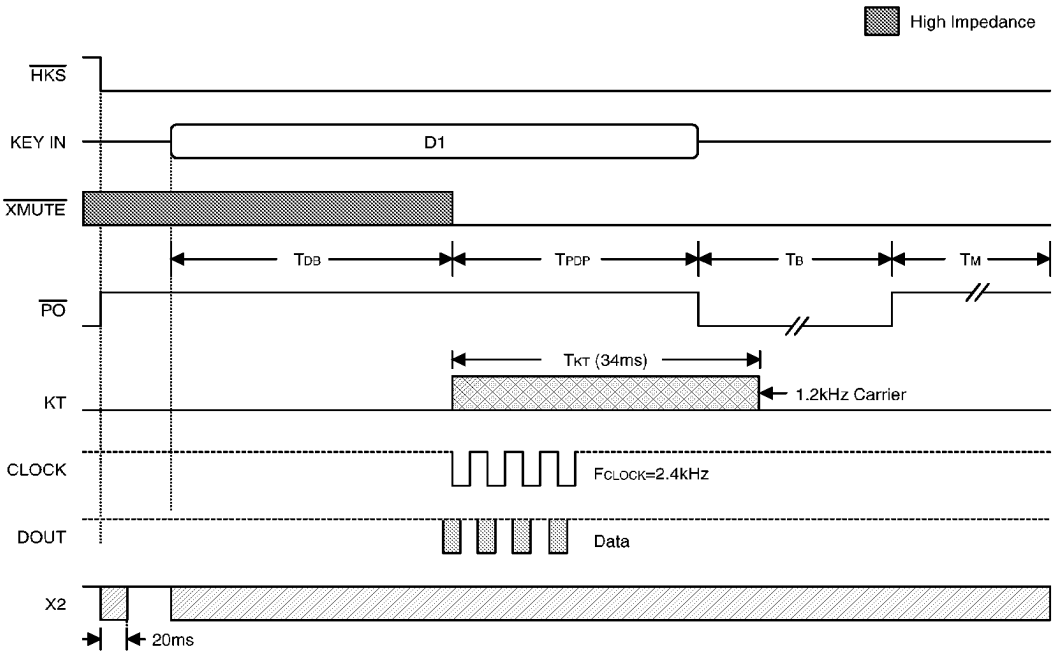

Note: D1=D3=3
D2=2

Powered by ICminer.com Electronic-Library Service CopyRight 2003

Application Circuits

Application circuit 1

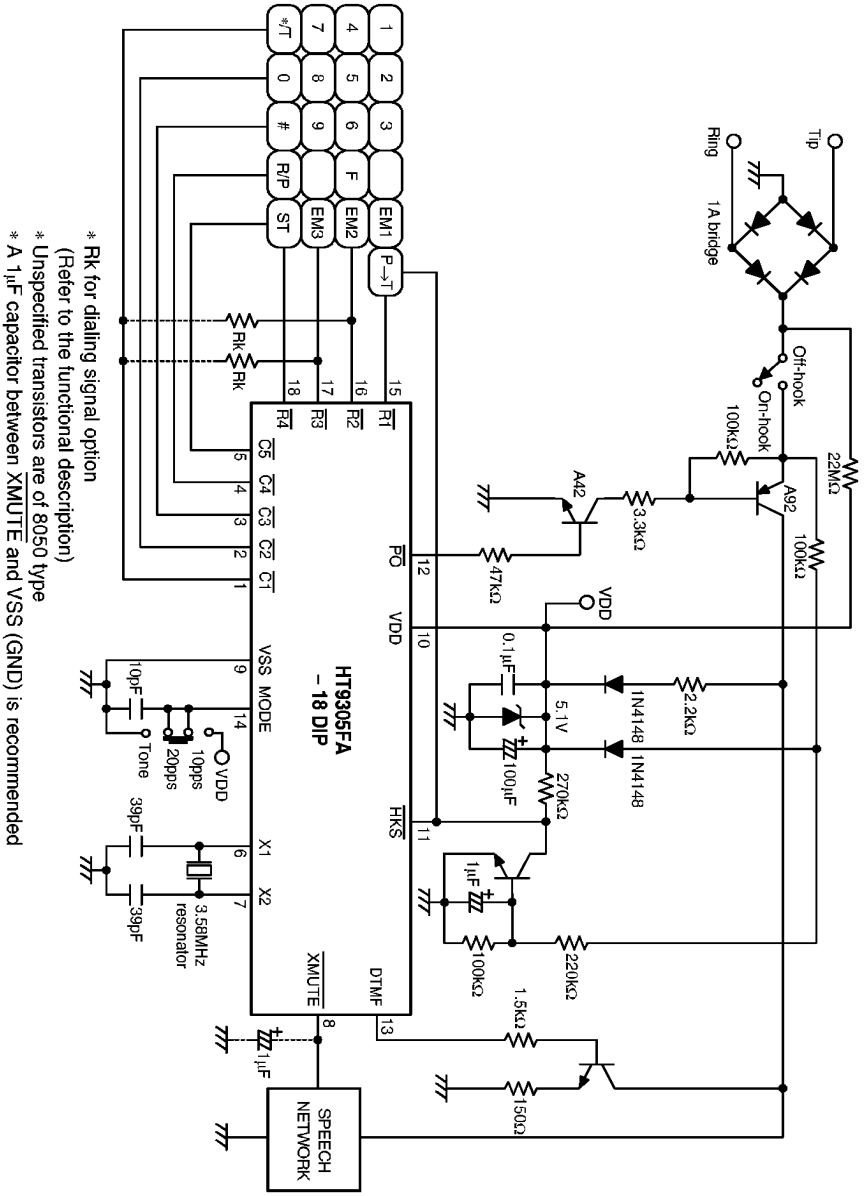

* Rk for dialing signal option
(Refer to the functional description)
* Unspecified transistors are of 8050 type
* A 1μF capacitor between XMUTE and VSS (GND) is recommended

Powered by ICminer.com Electronic-Library Service CopyRight 2003

Application circuit 2

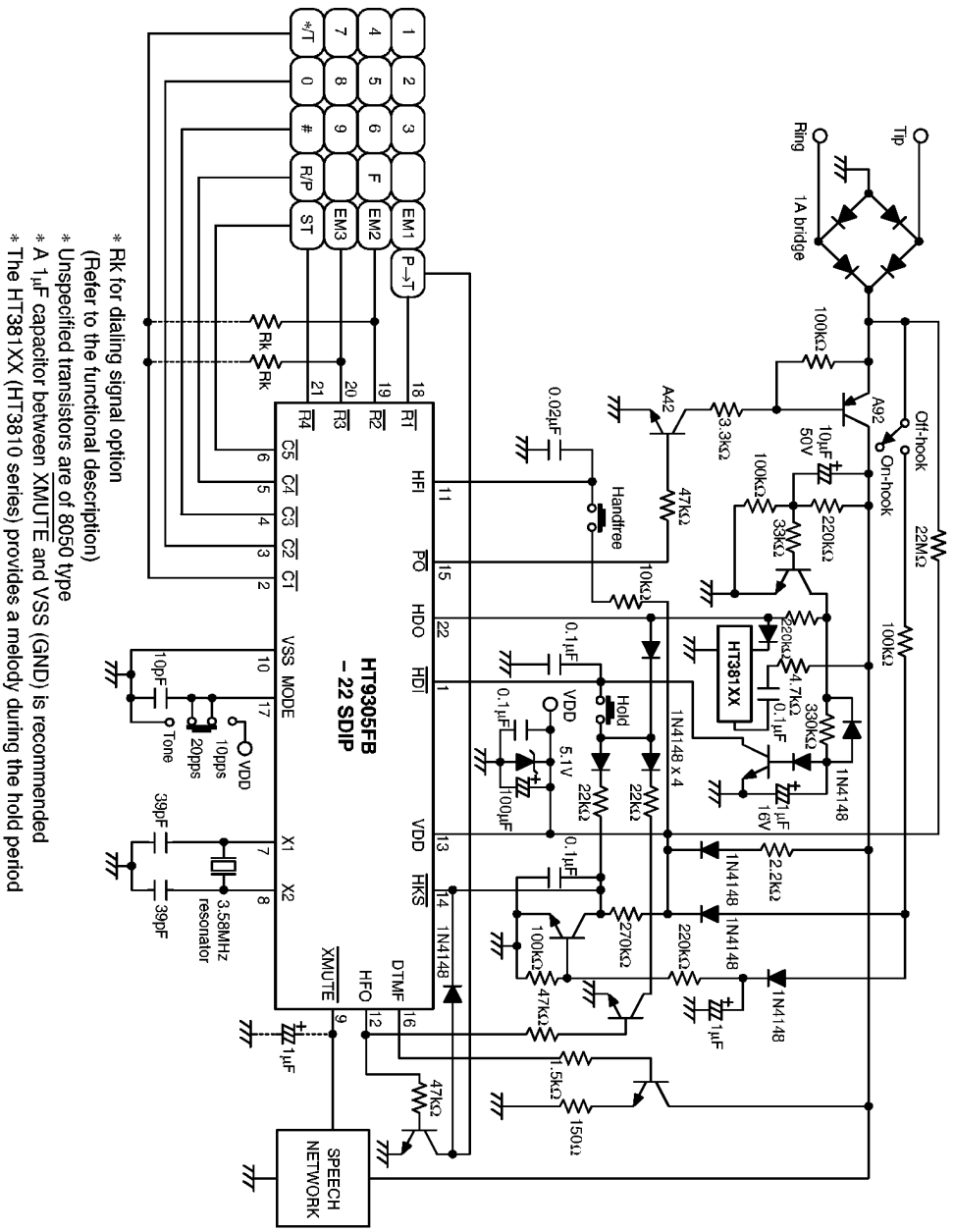

* Rk for dialing signal option
(Refer to the functional description)
* Unspecified transistors are of 8050 type
* A 1μF capacitor between XMUTE and VSS (GND) is recommended
* The HT381XX (HT3810 series) provides a melody during the hold period

Powered by ICminer.com Electronic-Library Service CopyRight 2003

Application circuit 3

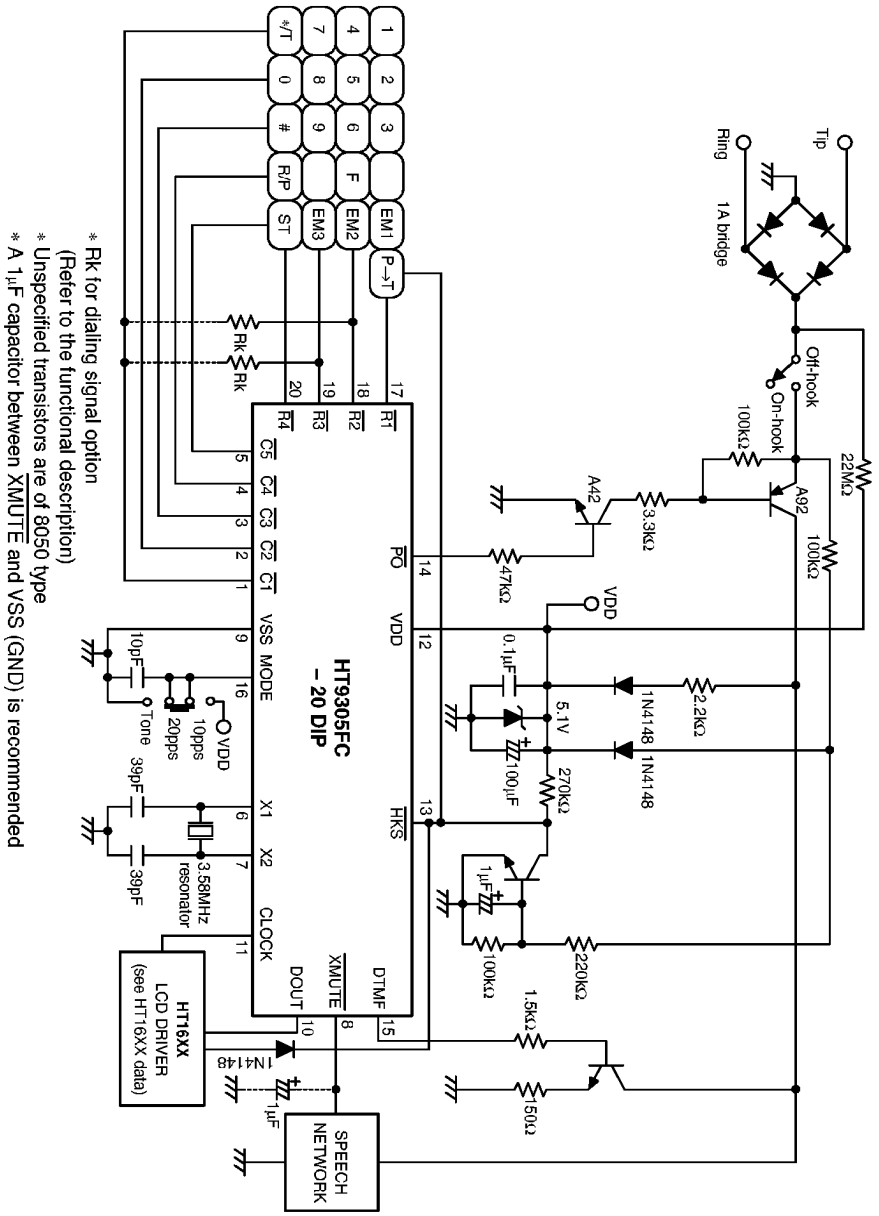

* Rk for dialing signal option
(Refer to the functional description)
* Unspecified transistors are of 8050 type
* A 1μF capacitor between $\overline{\text{XMUTE}}$ and VSS (GND) is recommended

Powered by ICminer.com Electronic-Library Service CopyRight 2003

Application circuit 4

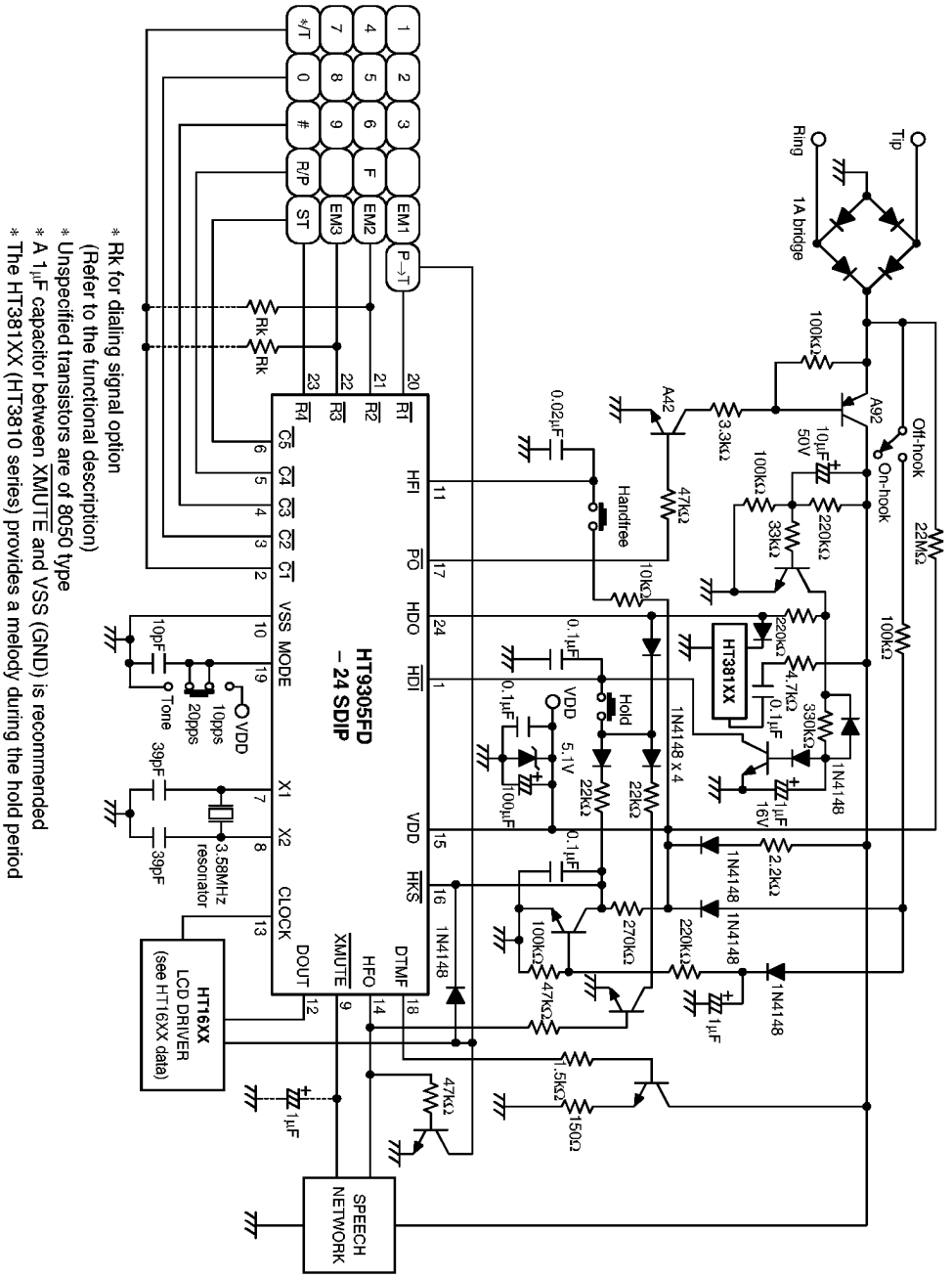

Powered by ICminer.com Electronic-Library Service CopyRight 2003

Application circuit 5

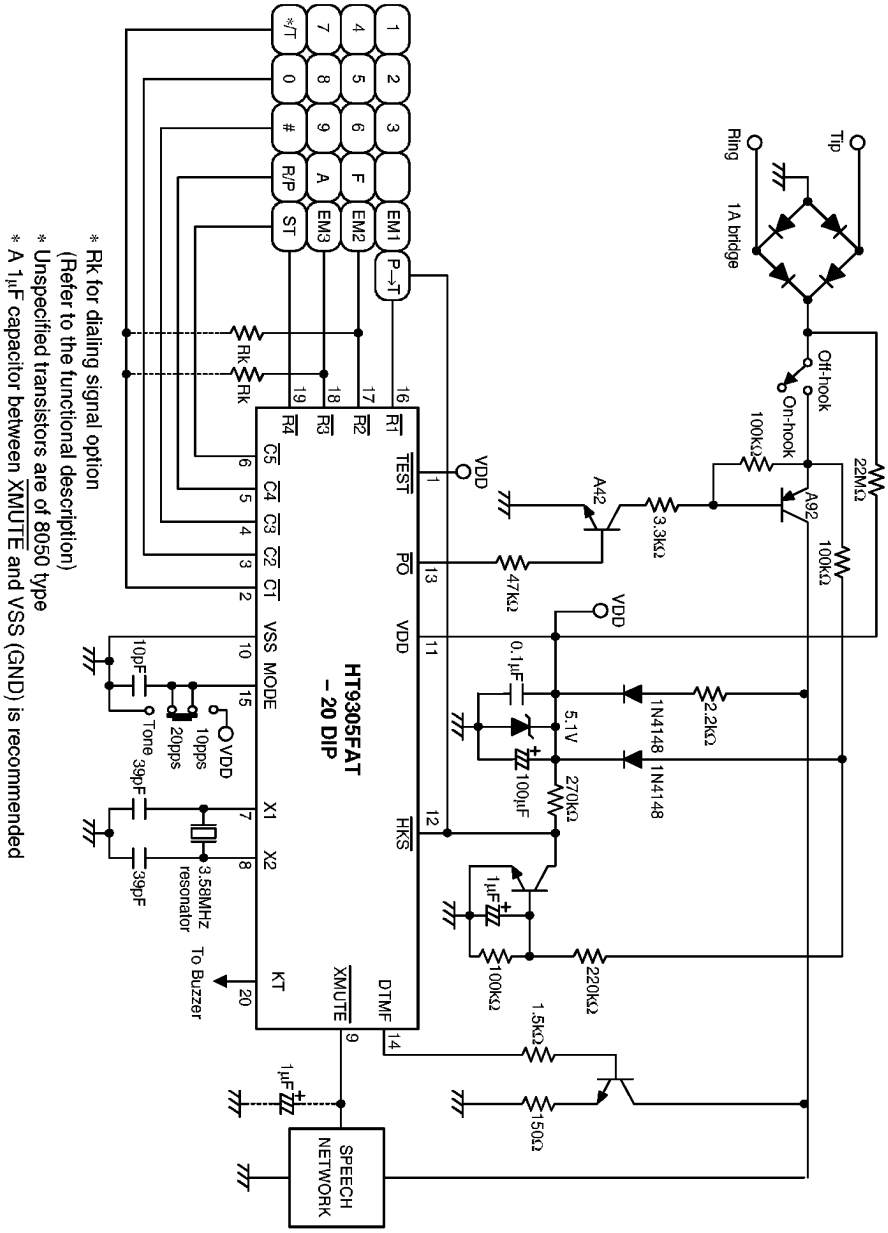

* Rk for dialing signal option
(Refer to the functional description)
* Unspecified transistors are of 8050 type
* A 1μF capacitor between XMUTE and VSS (GND) is recommended

Powered by ICminer.com Electronic-Library Service CopyRight 2003

Application circuit 6

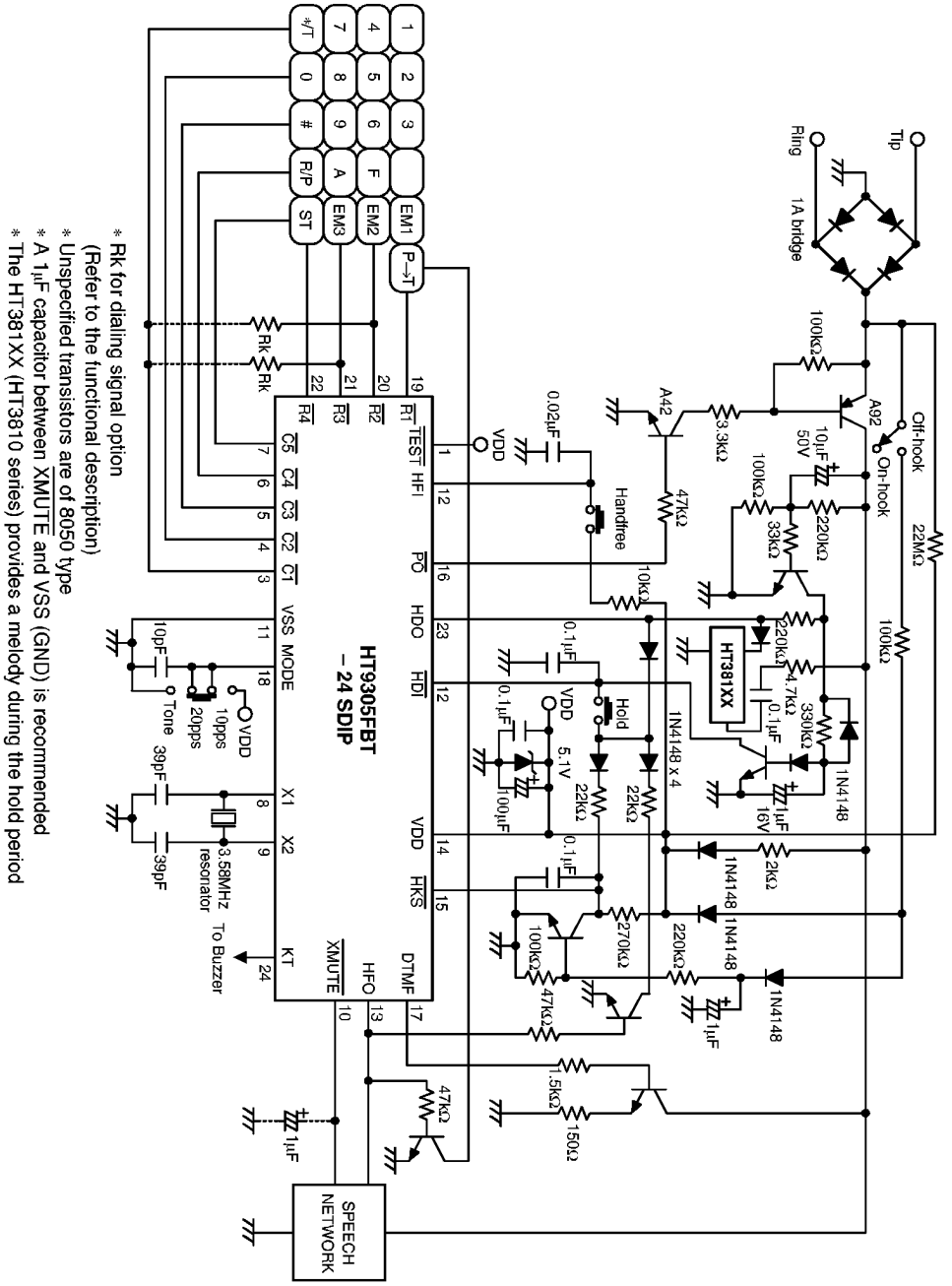

* Rk for dialing signal option
(Refer to the functional description)
* Unspecified transistors are of 8050 type
* A 1μF capacitor between $\overline{XMUTE}$ and VSS (GND) is recommended
* The HT3810XX (HT3810 series) provides a melody during the hold period

Powered by ICminer.com Electronic-Library Service CopyRight 2003

Application circuit 7

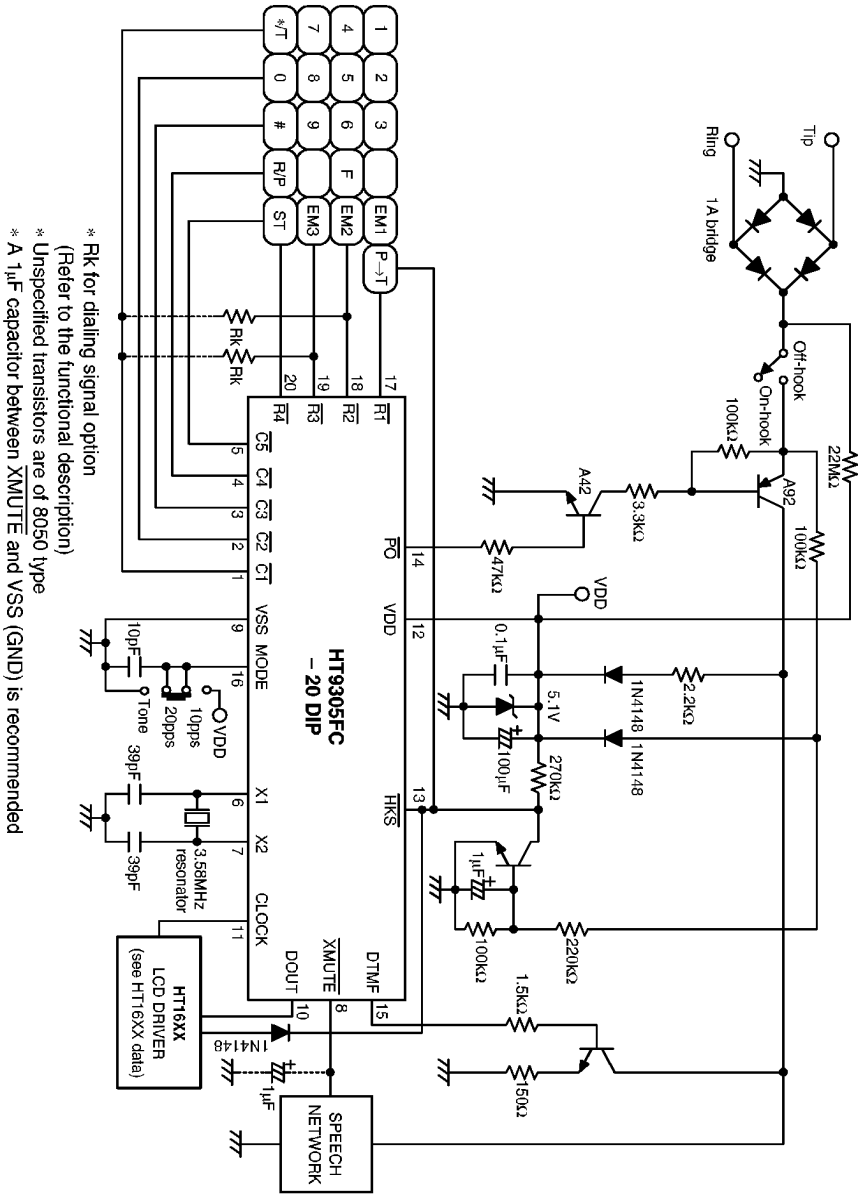

Powered by ICminer.com Electronic-Library Service CopyRight 2003

Application circuit 8

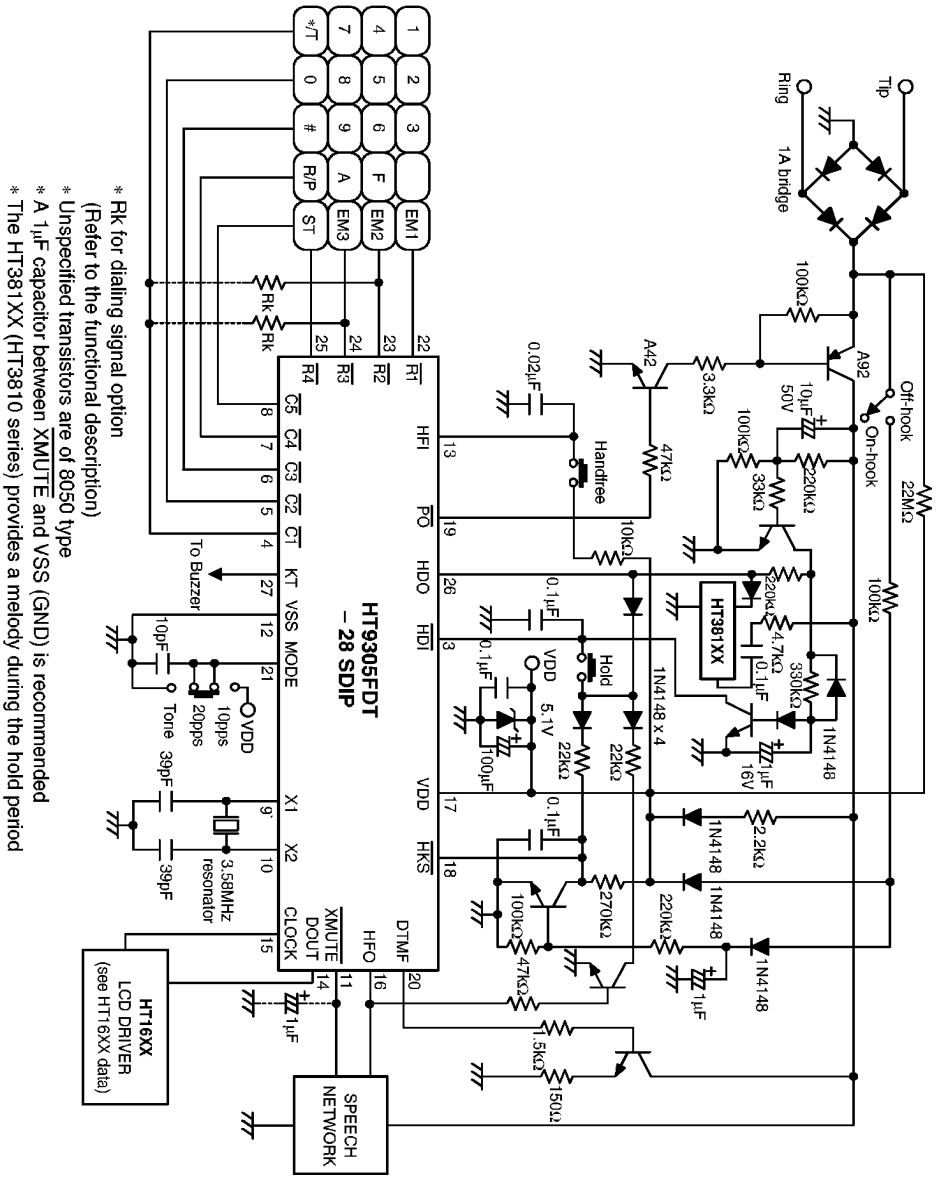

Powered by ICminer.com Electronic-Library Service CopyRight 2003