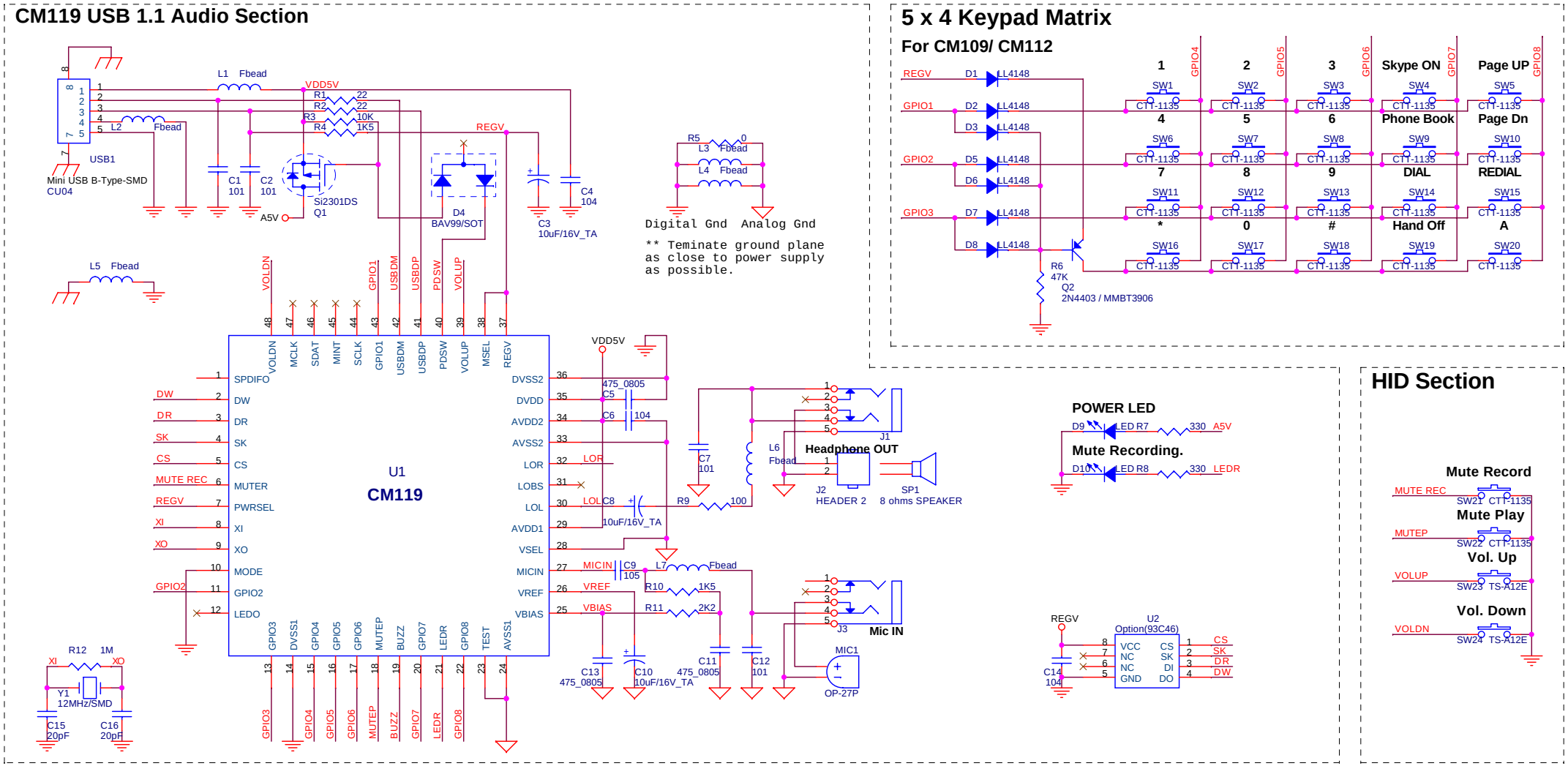
CM119 USB 1.1 Audio Section
5 x 4 Keypad Matrix
For CM109/ CM112
HID Section
Class-D Section
U1
CM119
Mini USB B-Type-SMD
CU04
USB1
Si2301DS
Q1
D4
BAV99/SOT
Digital Gnd
Analog Gnd
** Teminate ground plane as close to power supply as possible.
Headphone OUT
J2
HEADER 2
SP1
8 ohms SPEAKER
Mic IN
MIC1
OP-27P
POWER LED
Mute Recording.
Mute Record
Mute Play
Vol. Up
Vol. Down
Skype ON
Page UP
Phone Book
Page Dn
DIAL
REDIAL
Hand Off
Y1
12MHz/SMD
U2
Option(93C46)
U3
NJU8754V
SSOP10
Speaker
SP2
8 ohms SPEAKER
C-MEDIA ELECTRONICS Inc.
6F., 100, Sec. 4, Civil Boulevard, Taipei, Taiwan, R.O.C.
Title
USB Hand free Phone
Size
B
Document Number
CM119_1v5.sch
Rev
1.5
Date:
Monday, June 26, 2006
Sheet
1
of
1