DELPHI SERIES

FEATURES

- High efficiency: 89% @1.5V/40A
- Size: 58.4mm x 22.8mm x 9.5mm (2.30”x0.90”x0.37”)
- Industry standard pin out
- Fixed frequency operation
- Input UVLO, Output OTP, OCP, OVP
- Monotonic startup into normal and pre-biased loads
- Secondary control, very fast transient response
- 2250V Isolation and basic insulation
- No minimum load required
- SMD and through-hole versions
- No negative current during power or enable on/off
- ISO 9001, TL 9000, ISO 14001, QS 9000, OHSAS 18001 certified manufacturing facility
- UL/cUL 60950 (US & Canada) recognized, and TUV (EN60950) certified
- CE mark meets 73/23/EEC and 93/68/EEC directive

Delphi Series E48SH, 120W Eighth Brick Family DC/DC Power Modules: 48V in, 1.5V/40A out

The Delphi Series E48SH Eighth Brick, 48V input, single output, isolated DC/DC converters are the latest offering from a world leader in power systems technology and manufacturing — Delta Electronics, Inc. This product family is available in either a through-hole or surface-mounted package and provides up to 120 watts of power or 50A of output current (1.2V and below) in an industry standard footprint and pinout. The E48SH converter operates from an input voltage of 36V to 75V and is available in output voltages from 1.0V to 15V. Efficiency is 89% for 1.5V output at 40A full load. With creative design technology and optimization of component placement, these converters possess outstanding electrical and thermal performance, as well as extremely high reliability under highly stressful operating conditions. All models are fully protected from abnormal input/output voltage, current, and temperature conditions. The Delphi Series converters meet all safety requirements with basic insulation.

OPTIONS

- Positive On/Off logic
- Short pin lengths available
- External Synchronization
- Output OVP latch mode
- Output OCP latch mode
- Heat spreader

APPLICATIONS

- Telecom/DataCom
- Wireless Networks
- Optical Network Equipment
- Server and Data Storage
- Industrial/Test Equipment

DATASHEET
DS_E48SH1R540_02272007

Delta Electronics, Inc.

TECHNICAL SPECIFICATIONS

(T_A=25°C, airflow rate=300 LFM, V_{in}=48Vdc, nominal Vout unless otherwise noted.)

PARAMETER	NOTES and CONDITIONS	E48SH1R540 (Standard)			
		Min.	Typ.	Max.	Units
ABSOLUTE MAXIMUM RATINGS					
Input Voltage					
Continuous				75	Vdc
Transient (100ms)	100ms			100	Vdc
Operating Temperature	Refer to Figure 21 for measuring point	-40		125	°C
Storage Temperature		-55		125	°C
Input/Output Isolation Voltage				2250	Vdc
INPUT CHARACTERISTICS					
Operating Input Voltage		36		75	Vdc
Input Under-Voltage Lockout					
Turn-On Voltage Threshold		33	34	35	Vdc
Turn-Off Voltage Threshold		31	32	33	Vdc
Lockout Hysteresis Voltage		1.5	2	2.5	Vdc
Maximum Input Current	100% Load, 36Vin			2.2	A
No-Load Input Current			50		mA
Off Converter Input Current			3		mA
Inrush Current(I^2t)				1	A^2s
Input Reflected-Ripple Current	P-P thru 12μH inductor, 5Hz to 20MHz		20		mA
Input Voltage Ripple Rejection	120 Hz		50		dB
OUTPUT CHARACTERISTICS					
Output Voltage Set Point	Vin=48V, Io=Io.max, Tc=25°C	1.485	1.5	1.515	Vdc
Output Voltage Regulation					
Over Load	Io=Io,min to Io,max		±3	±10	mV
Over Line	Vin=36V to 75V		±3	±10	mV
Over Temperature	Tc=-40°C to 85°C		±15		mV
Total Output Voltage Range	over sample load, line and temperature	1.47		1.53	V
Output Voltage Ripple and Noise	5Hz to 20MHz bandwidth				
Peak-to-Peak	Full Load, 1μF ceramic, 10μF tantalum		30	60	mV
RMS	Full Load, 1μF ceramic, 10μF tantalum		10	20	mV
Operating Output Current Range		0		40	A
Output DC Current-Limit Inception	Output Voltage 10% Low	110		140	%
DYNAMIC CHARACTERISTICS					
Output Voltage Current Transient	48V, 10μF Tan & 1μF Ceramic load cap, 0.1A/μs				
Positive Step Change in Output Current	50% Io.max to 75% Io.max		30		mV
Negative Step Change in Output Current	75% Io.max to 50% Io.max		30		mV
Settling Time (within 1% Vout nominal)			100		us
Turn-On Transient					
Start-Up Time, From On/Off Control			10		ms
Start-Up Time, From Input			10		ms
Maximum Output Capacitance	Full load; no overshoot of Vout at startup			40000	μF
EFFICIENCY					
100% Load			89		%
60% Load			90.5		%
ISOLATION CHARACTERISTICS					
Input to Output				2250	Vdc
Isolation Resistance				10	MΩ
Isolation Capacitance			1500		pF
FEATURE CHARACTERISTICS					
Switching Frequency			200		kHz
ON/OFF Control, Negative Remote On/Off logic					
Logic Low (Module On)	Von/off at Ion/off=1.0mA			1.2	V
Logic High (Module Off)	Von/off at Ion/off=0.0 μA	3		50	V
ON/OFF Control, Positive Remote On/Off logic					
Logic Low (Module Off)	Von/off at Ion/off=1.0mA			1.2	V
Logic High (Module On)	Von/off at Ion/off=0.0 μA	3		50	V
ON/OFF Current (for both remote on/off logic)	Ion/off at Von/off=0.0V			1	mA
Leakage Current (for both remote on/off logic)	Logic High, Von/off=15V			50	uA
Output Voltage Trim Range	Across Pins 9 & 5, Pout ≦ max rated power	-20		10	%
Output Voltage Remote Sense Range	Pout ≦ max rated power			10	%
Output Over-Voltage Protection	Over full temp range; % of nominal Vout		1.8		V
GENERAL SPECIFICATIONS					
MTBF	Io=80% of Io, max; 300LFM @25C		2.05		M hours
Weight			20		grams
Over-Temperature Shutdown	Refer to Figure 21 for measuring point		130		°C

ELECTRICAL CHARACTERISTICS CURVES

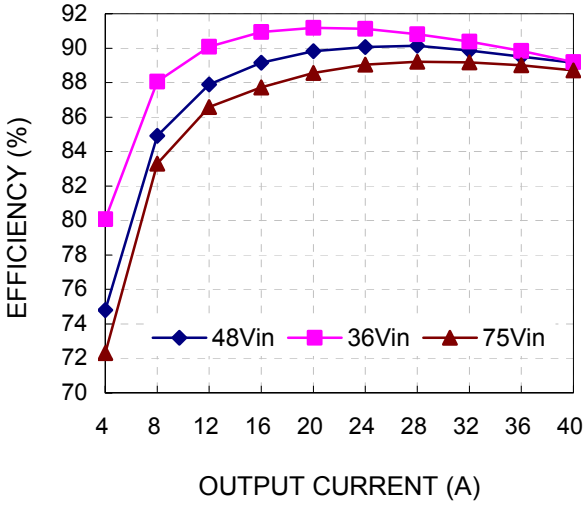

Figure 1: *Efficiency vs. load current for minimum, nominal, and maximum input voltage at 25°C*

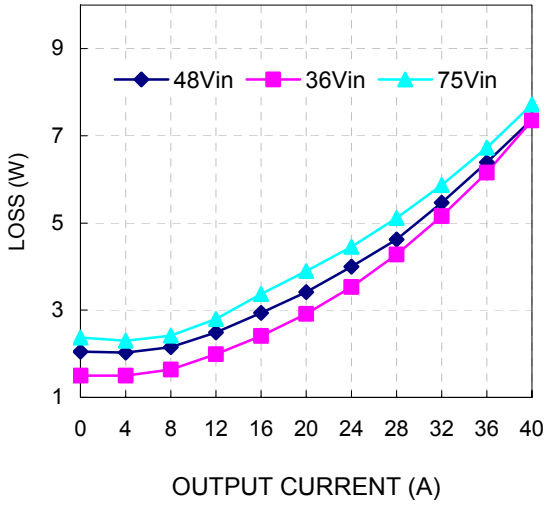

Figure 2: *Power dissipation vs. load current for minimum, nominal, and maximum input voltage at 25°C.*

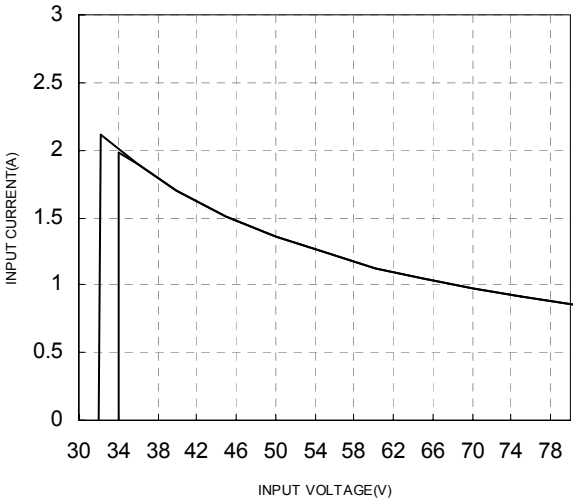

Figure 3: *Typical full load input characteristics at room temperature*

ELECTRICAL CHARACTERISTICS CURVES

For Negative Remote On/Off Logic

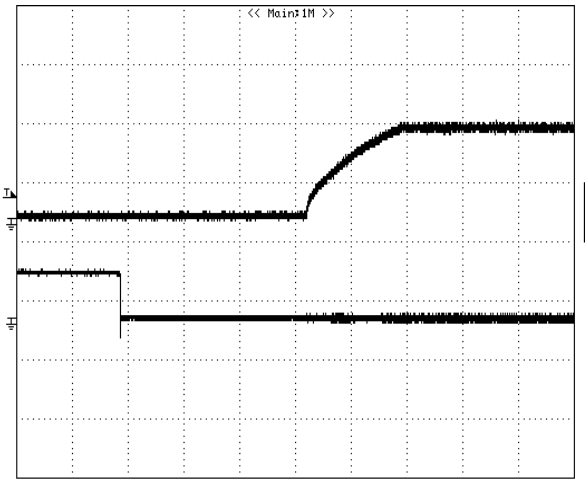

Figure 4: *Turn-on transient at zero load current (5 ms/div). Vin=48V.Top Trace: Vout, 1V/div; Bottom Trace: ON/OFF input, 5V/div*

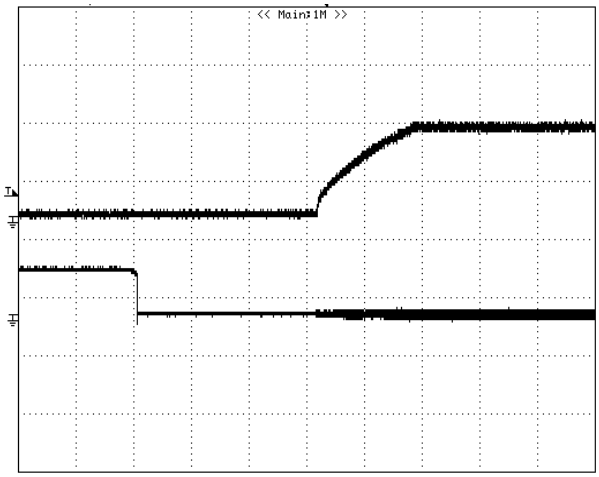

Figure 5: *Turn-on transient at full rated load current (constant current load) (5 ms/div). Vin=48V.Top Trace: Vout, 1V/div; Bottom Trace: ON/OFF input, 5V/div*

For Input Voltage Start up

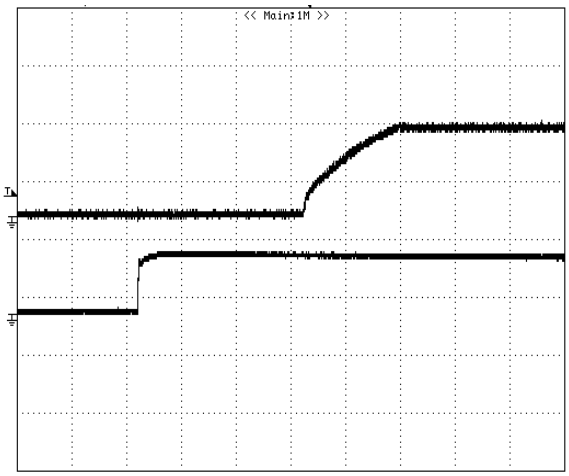

Figure 6: *Turn-on transient at zero load current (2 ms/div). Vin=48V.Top Trace: Vout, 1V/div, Bottom Trace: input voltage, 5V/div*

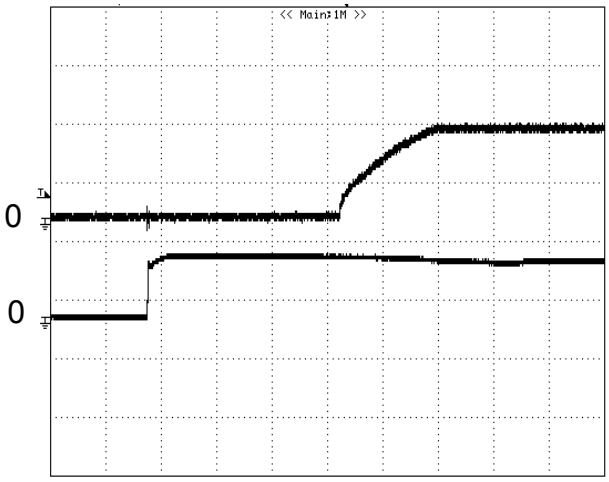

Figure 7: *Turn-on transient at full rated load current (constant current load) (2 ms/div). Vin=48V.Top Trace: Vout, 1V/div; Bottom Trace: input voltage, 5V/div*

ELECTRICAL CHARACTERISTICS CURVES

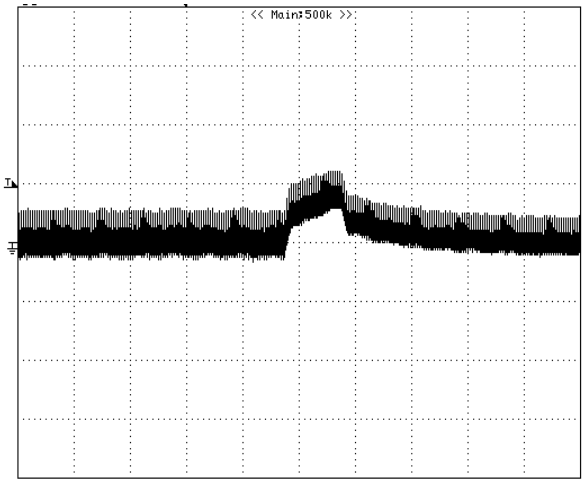

Figure 8: *Output voltage response to step-change in load current (75%-50% of Io, max; di/dt = 0.1A/µs). Load cap: 10µF, tantalum capacitor and 1µF ceramic capacitor. Trace: Vout (20mV/div, 100us/div), Scope measurement should be made using a BNC cable (length shorter than 20 inches). Position the load between 51 mm to 76 mm (2 inches to 3 inches) from the module..*

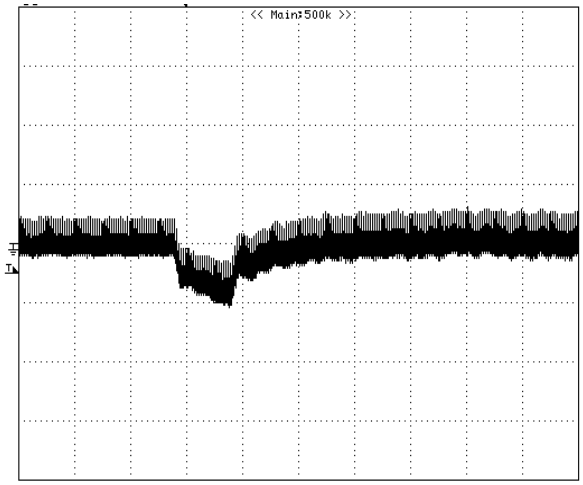

Figure 9: *Output voltage response to step-change in load current (50%-75% of Io, max; di/dt = 0.1A/µs). Load cap: 10µF, tantalum capacitor and 1µF ceramic capacitor. Trace: Vout (20mV/div, 100us/div), Scope measurement should be made using a BNC cable (length shorter than 20 inches). Position the load between 51 mm to 76 mm (2 inches to 3 inches) from the module..*

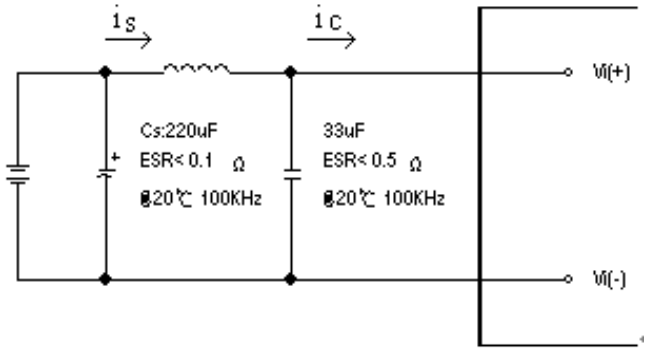

Figure 10: *Test set-up diagram showing measurement points for Input Terminal Ripple Current and Input Reflected Ripple Current.*
Note: Measured input reflected-ripple current with a simulated source Inductance (L_{TEST}) of 12 µH. Capacitor Cs offset possible battery impedance. Measure current as shown above

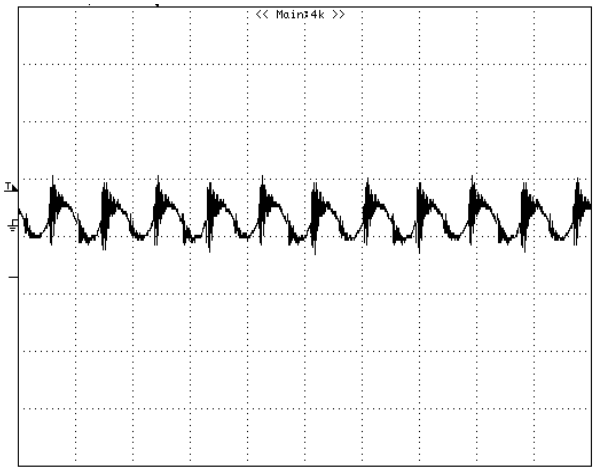

Figure 11: *Input Terminal Ripple Current, i_c, at full rated output current and nominal input voltage with 12µH source impedance and 33µF electrolytic capacitor (200 mA/div, 2us/div).*

ELECTRICAL CHARACTERISTICS CURVES

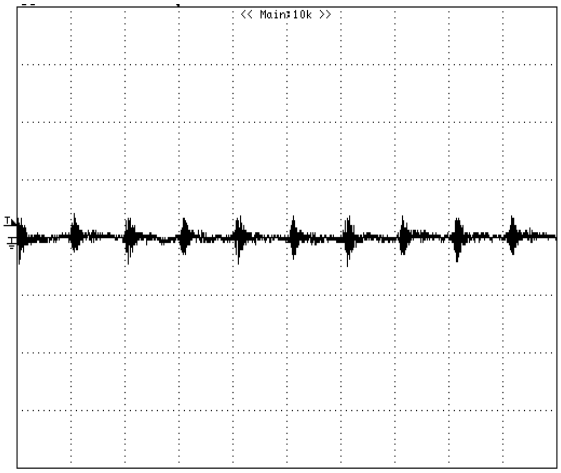

Figure 12: *Input reflected ripple current, i_s, through a 12µH source inductor at nominal input voltage and rated load current (20 mA/div, 2us/div).*

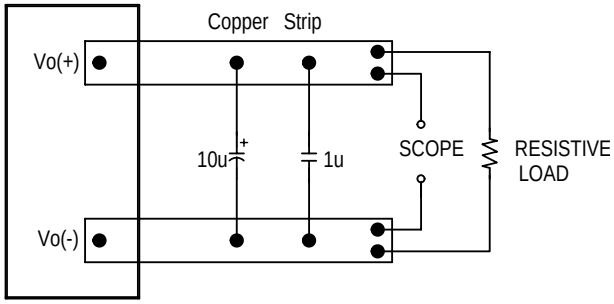

Figure 13: *Output voltage noise and ripple measurement test setup*

Figure 14: *Output voltage ripple at nominal input voltage and rated load current (Io=40A)(20 mV/div, 2us/div)*
Load capacitance: 1µF ceramic capacitor and 10µF tantalum capacitor. Bandwidth: 20 MHz. Scope measurements should be made using a BNC cable (length shorter than 20 inches). Position the load between 51 mm to 76 mm (2 inches to 3 inches) from the module.

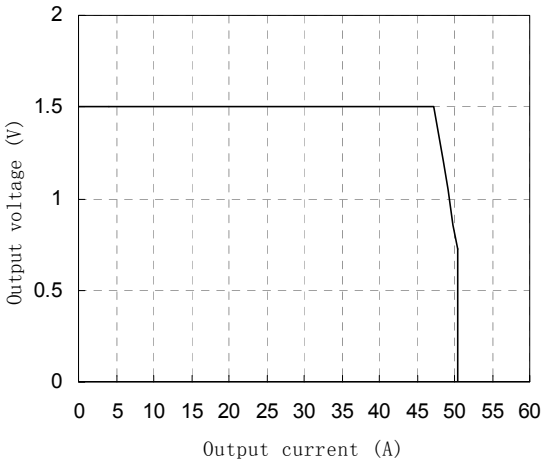

Figure 15: *Output voltage vs. load current showing typical current limit curves and converter shutdown points.*

DESIGN CONSIDERATIONS

Input Source Impedance

The impedance of the input source connecting to the DC/DC power modules will interact with the modules and affect the stability. A low ac-impedance input source is recommended. If the source inductance is more than a few μH, we advise adding a 10 to 100 μF electrolytic capacitor (ESR < 0.7 Ω at 100 kHz) mounted close to the input of the module to improve the stability.

Layout and EMC Considerations

Delta's DC/DC power modules are designed to operate in a wide variety of systems and applications. For design assistance with EMC compliance and related PWB layout issues, please contact Delta's technical support team. An external input filter module is available for easier EMC compliance design. Application notes to assist designers in addressing these issues are pending release.

Safety Considerations

The power module must be installed in compliance with the spacing and separation requirements of the end-user's safety agency standard, i.e., UL60950, CAN/CSA-C22.2 No. 60950-00 and EN60950: 2000 and IEC60950-1999, if the system in which the power module is to be used must meet safety agency requirements.

Basic insulation based on 75 Vdc input is provided between the input and output of the module for the purpose of applying insulation requirements when the input to this DC-to-DC converter is identified as TNV-2 or SELV. An additional evaluation is needed if the source is other than TNV-2 or SELV.

When the input source is SELV circuit, the power module meets SELV (safety extra-low voltage) requirements. If the input source is a hazardous voltage which is greater than 60 Vdc and less than or equal to 75 Vdc, for the module's output to meet SELV requirements, all of the following must be met:

- The input source must be insulated from the ac mains by reinforced or double insulation.
- The input terminals of the module are not operator accessible.
- If the metal baseplate is grounded, one Vi pin and one Vo pin shall also be grounded.
- A SELV reliability test is conducted on the system where the module is used, in combination with the module, to ensure that under a single fault, hazardous voltage does not appear at the module's output.

When installed into a Class II equipment (without grounding), spacing consideration should be given to the end-use installation, as the spacing between the module and mounting surface have not been evaluated.

The power module has extra-low voltage (ELV) outputs when all inputs are ELV.

This power module is not internally fused. To achieve optimum safety and system protection, an input line fuse is highly recommended. The safety agencies require a normal-blow fuse with 10A maximum rating to be installed in the ungrounded lead. A lower rated fuse can be used based on the maximum inrush transient energy and maximum input current.

Soldering and Cleaning Considerations

Post solder cleaning is usually the final board assembly process before the board or system undergoes electrical testing. Inadequate cleaning and/or drying may lower the reliability of a power module and severely affect the finished circuit board assembly test. Adequate cleaning and/or drying is especially important for un-encapsulated and/or open frame type power modules. For assistance on appropriate soldering and cleaning procedures, please contact Delta's technical support team.

FEATURES DESCRIPTIONS

Over-Current Protection

The E48SH modules include an internal output over-current protection circuit, which will endure current limiting for an unlimited duration during output overload. When the output current exceeds the OCP set point, the current limit function will work by initially reduce duty cycle of the module, the unit will go out of regulation but remains in safe operating area before the output drops below 50%. When output drops below 50%, the modules will automatically shut down and enter hiccup mode.

During hiccup, the modules will try to restart after shutdown. If the overload condition still exists, the module will shut down again. This restart trial will continue until the overload condition is corrected.

Over-Voltage Protection

The modules include an internal output over-voltage protection circuit, which monitors the voltage on the output terminals. If this voltage exceeds the over-voltage set point, the module will shut down and restart after 200mS. latch off mode is optional. Under latch off mode the over-voltage latch is reset by either cycling the input power or by toggling the on/off signal for one second.

Over-Temperature Protection

The over-temperature protection consists of circuitry that provides protection from thermal damage. If the temperature exceeds the over-temperature threshold the module will shut down.

The module will try to restart after shutdown. If the over-temperature condition still exists during restart, the module will shut down again. This restart trial will continue until the temperature is within specification.

Remote On/Off

The remote on/off feature on the module can be either negative or positive logic. Negative logic turns the module on during a logic low and off during a logic high. Positive logic turns the modules on during a logic high and off during a logic low.

Remote on/off can be controlled by an external switch between the on/off terminal and the Vi(-) terminal. The switch can be an open collector or open drain.

For negative logic if the remote on/off feature is not used, please short the on/off pin to Vi(-). For positive logic if the remote on/off feature is not used, please leave the on/off pin to floating.

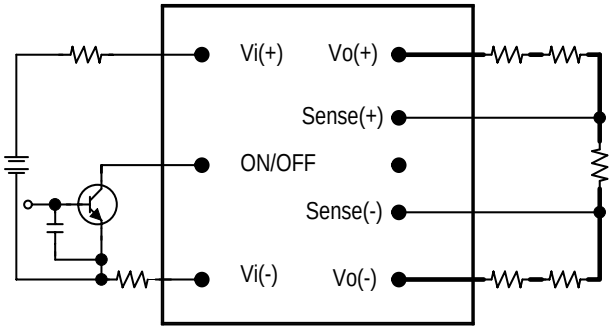

Figure 16: *Remote on/off implementation*

Remote Sense

Remote sense compensates for voltage drops on the output by sensing the actual output voltage at the point of load. The voltage between the remote sense pins and the output terminals must not exceed the output voltage sense range given here:

$$[Vo(+) – Vo(–)] – [SENSE(+) – SENSE(–)] \leq 10\% \times Vout$$

This limit includes any increase in voltage due to remote sense compensation and output voltage set point adjustment (trim).

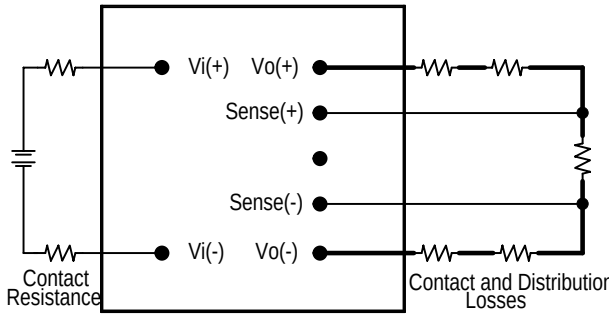

Figure 17: *Effective circuit configuration for remote sense operation*

If the remote sense feature is not used to regulate the output at the point of load, please connect SENSE(+) to Vo(+) and SENSE(–) to Vo(–) at the module.

The output voltage can be increased by both the remote sense and the trim; however, the maximum increase is the larger of either the remote sense or the trim, not the sum of both.

When using remote sense and trim, the output voltage of the module is usually increased, which increases the power output of the module with the same output current.

Care should be taken to ensure that the maximum output power does not exceed the maximum rated power.

FEATURES DESCRIPTIONS (CON.)

Output Voltage Adjustment (TRIM)

To increase or decrease the output voltage set point, the modules may be connected with an external resistor between the TRIM pin and either the SENSE(+) or SENSE(-). The TRIM pin should be left open if this feature is not used.

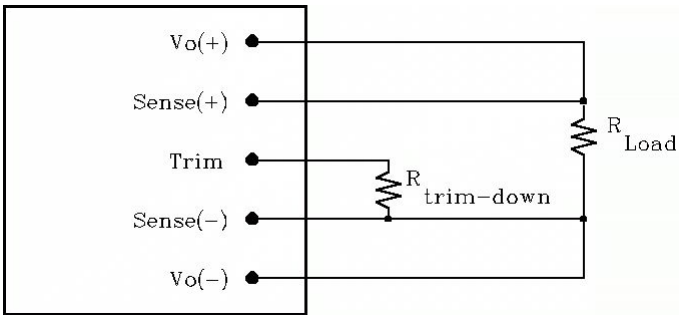

Figure 18: *Circuit configuration for trim-down (decrease output voltage)*

If the external resistor is connected between the TRIM and SENSE (-) pins, the output voltage set point decreases (Fig. 18). The external resistor value required to obtain a percentage of output voltage change △% is defined as:

$$Rtrim-down=\frac{511}{\Delta}-10.2(K\Omega)$$

Ex. When Trim-down -10%(1.5V×0.9=1.35V)

$$Rtrim-down=\frac{511}{10}-10.2=40.9(K\Omega)$$

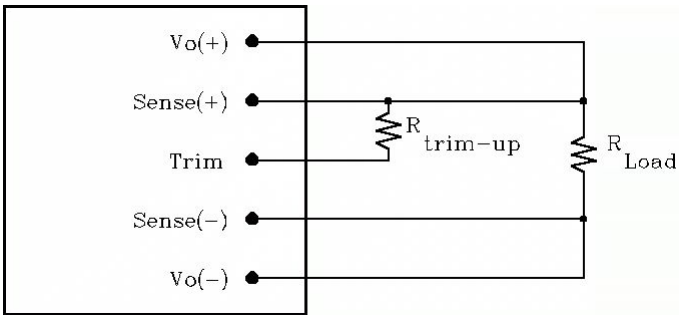

Figure 19: *Circuit configuration for trim-up (increase output voltage)*

If the external resistor is connected between the TRIM and SENSE (+) the output voltage set point increases (Fig. 19). The external resistor value required to obtain a percentage output voltage change △% is defined as:

$$Rtrim-up=\frac{5.11Vo\ (100+\Delta)}{1.225\ \Delta}-\frac{511}{\Delta}-10.2(K\Omega)$$

Ex. When Trim-up +10%(1.5V×1.1=1.65V)

$$Rtrim-up=\frac{5.11\times1.5\times\ (100+10\ )}{1.225\times10}-\frac{511}{10}-10.2=7.5(K\Omega)$$

The output voltage can be increased by both the remote sense and the trim, however the maximum increase is the larger of either the remote sense or the trim, not the sum of both.

When using remote sense and trim, the output voltage of the module is usually increased, which increases the power output of the module with the same output current.

Care should be taken to ensure that the maximum output power of the module remains at or below the maximum rated power.

Frequency Synchronization

This product family can be synchronized with external clock signal to the TRIM pin. This reduces system noise and interference in multiple converter systems.

THERMAL CONSIDERATIONS

Thermal management is an important part of the system design. To ensure proper, reliable operation, sufficient cooling of the power module is needed over the entire temperature range of the module. Convection cooling is usually the dominant mode of heat transfer.

Hence, the choice of equipment to characterize the thermal performance of the power module is a wind tunnel.

Thermal Testing Setup

Delta's DC/DC power modules are characterized in heated vertical wind tunnels that simulate the thermal environments encountered in most electronics equipment. This type of equipment commonly uses vertically mounted circuit cards in cabinet racks in which the power modules are mounted.

The following figure shows the wind tunnel characterization setup. The power module is mounted on a test PWB and is vertically positioned within the wind tunnel. The space between the neighboring PWB and the top of the power module is constantly kept at 6.35mm (0.25").

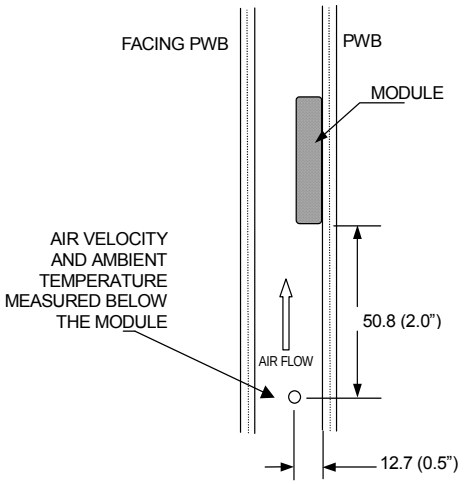

Note: Wind Tunnel Test Setup Figure Dimensions are in millimeters and (Inches)

Figure 20: *Wind tunnel test setup*

Thermal Derating

Heat can be removed by increasing airflow over the module. The hottest point temperature of the module is 130℃. To enhance system reliability; the power module should always be operated below the maximum operating temperature. If the temperature exceeds the maximum module temperature, reliability of the unit may be affected.

THERMAL CURVES

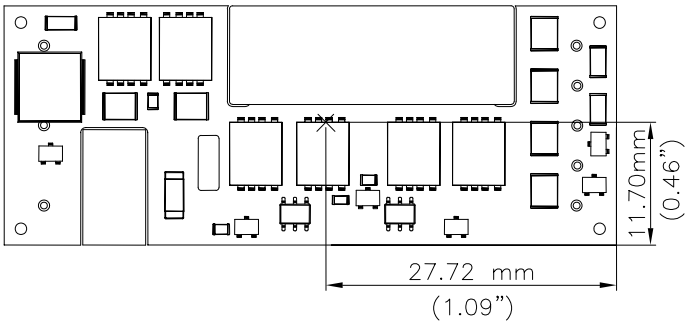

Figure 21: *Case temperature measurement location.*
Pin locations are for reference only.
∗The allowed maximum hot spot temperature is defined at 130℃

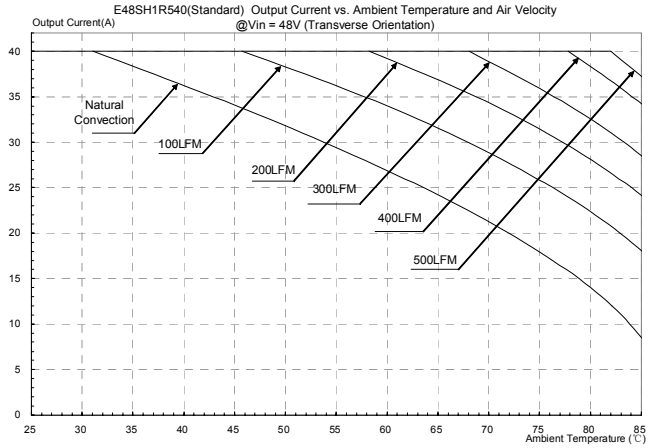

Figure 22: *Output current vs. ambient temperature and air velocity @V_{in}= 48V (Transverse Orientation)*

PICK AND PLACE LOCATION

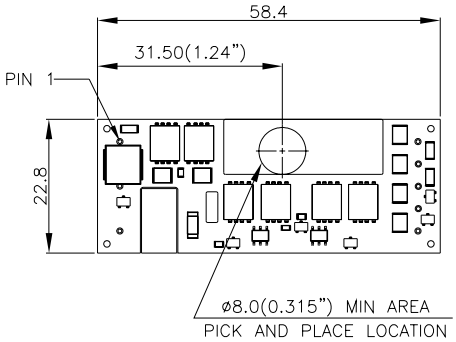

NOTES:
DIMENSIONS ARE IN MILLIMETERS AND (INCHES)
TOLERANCES: X.Xmm±0.5mm(X.XX in.±0.02 in.)
X.XXmm±0.25mm(X.XXX in.±0.010 in.)

SURFACE-MOUNT TAPE & REEL

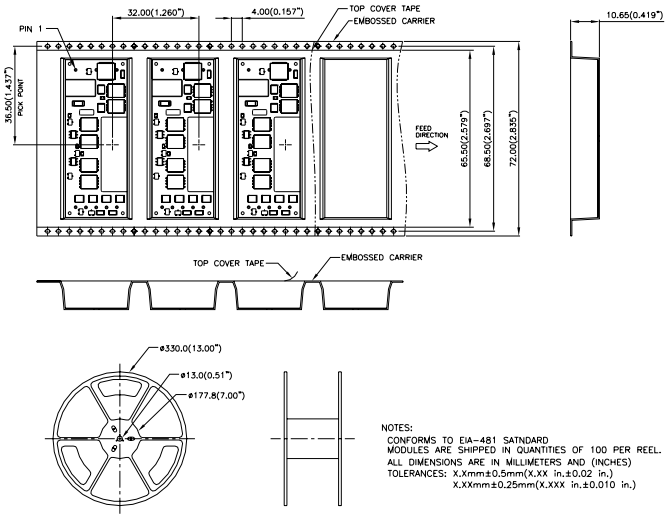

RECOMMENDED PAD LAYOUT (SMD)

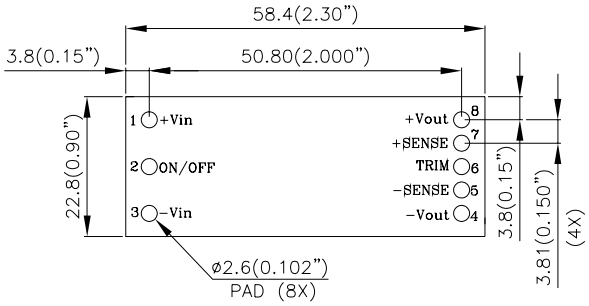

RECOMENDED P.W.B. PAD LAYOUT

NOTES:
DIMENSIONS ARE IN MILLIMETERS AND (INCHES)
TOLERANCES: X.Xmm±0.5mm(X.XX in.±0.02 in.)
X.XXmm±0.25mm(X.XXX in.±0.010 in.)

LEADED (Sn/Pb) PROCESS RECOMMEND TEMP. PROFILE

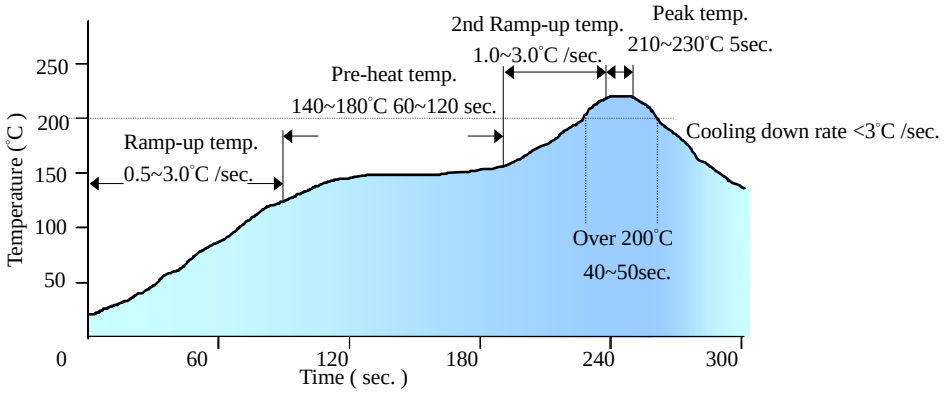

Note: The temperature refers to the pin of E48SH, measured on the pin +Vout joint.

LEAD FREE (SAC) PROCESS RECOMMEND TEMP. PROFILE

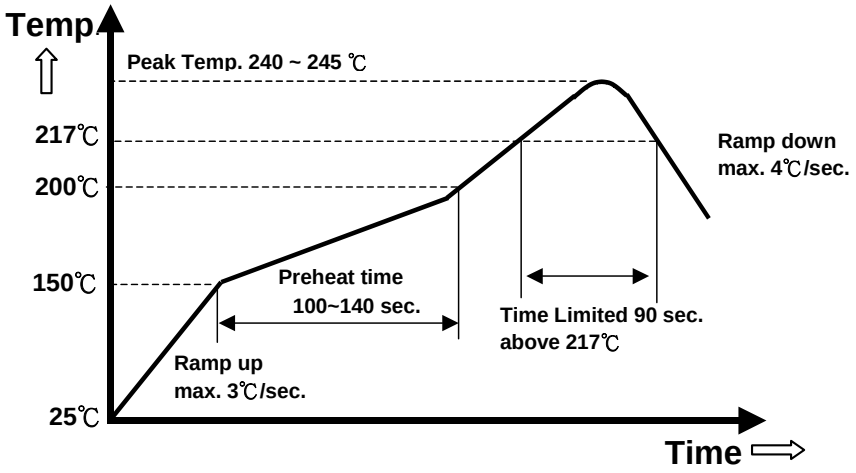

Note: The temperature refers to the pin of E48SH, measured on the pin +Vout joint.

MECHANICAL DRAWING (WITHOUT HEATSPREADER)

SURFACE-MOUNT MODULE

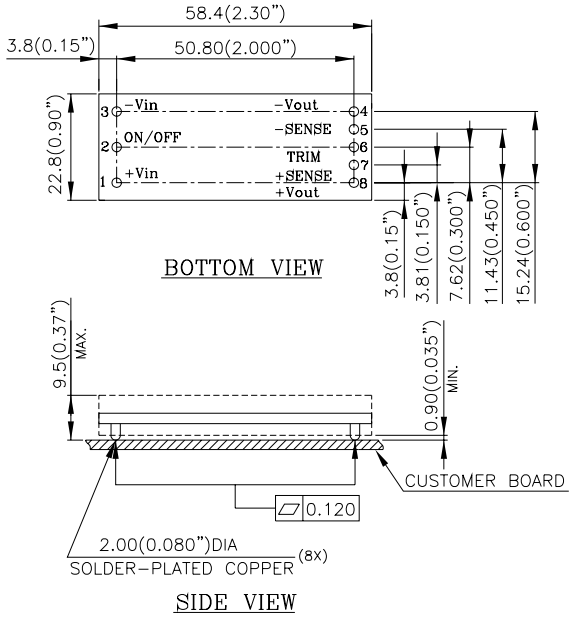

THROUGH-HOLE MODULE

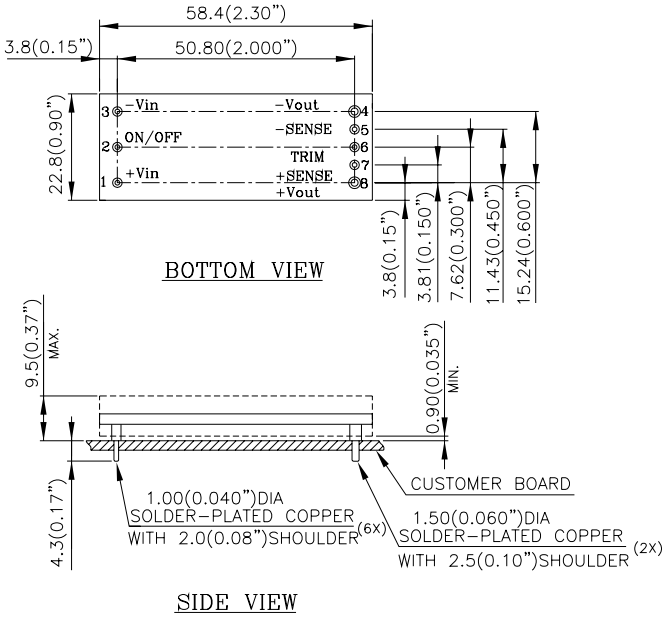

NOTES:
DIMENSIONS ARE IN MILLIMETERS AND (INCHES)
TOLERANCES: X.Xmm±0.5mm(X.XX in.±0.02 in.)
X.XXmm±0.25mm(X.XXX in.±0.010 in.)

Pin No.	Name	Function
1	+Vin	Positive input voltage
2	ON/OFF	Remote ON/OFF
3	-Vin	Negative input voltage
4	-Vout	Negative output voltage
5	-SENSE	Negative remote sense
6	TRIM	Output voltage trim
7	+SENSE	Positive remote sense
8	+Vout	Positive output voltage

MECHANICAL DRAWING (WITH HEATSPREADER)

THROUGH-HOLE MODULE

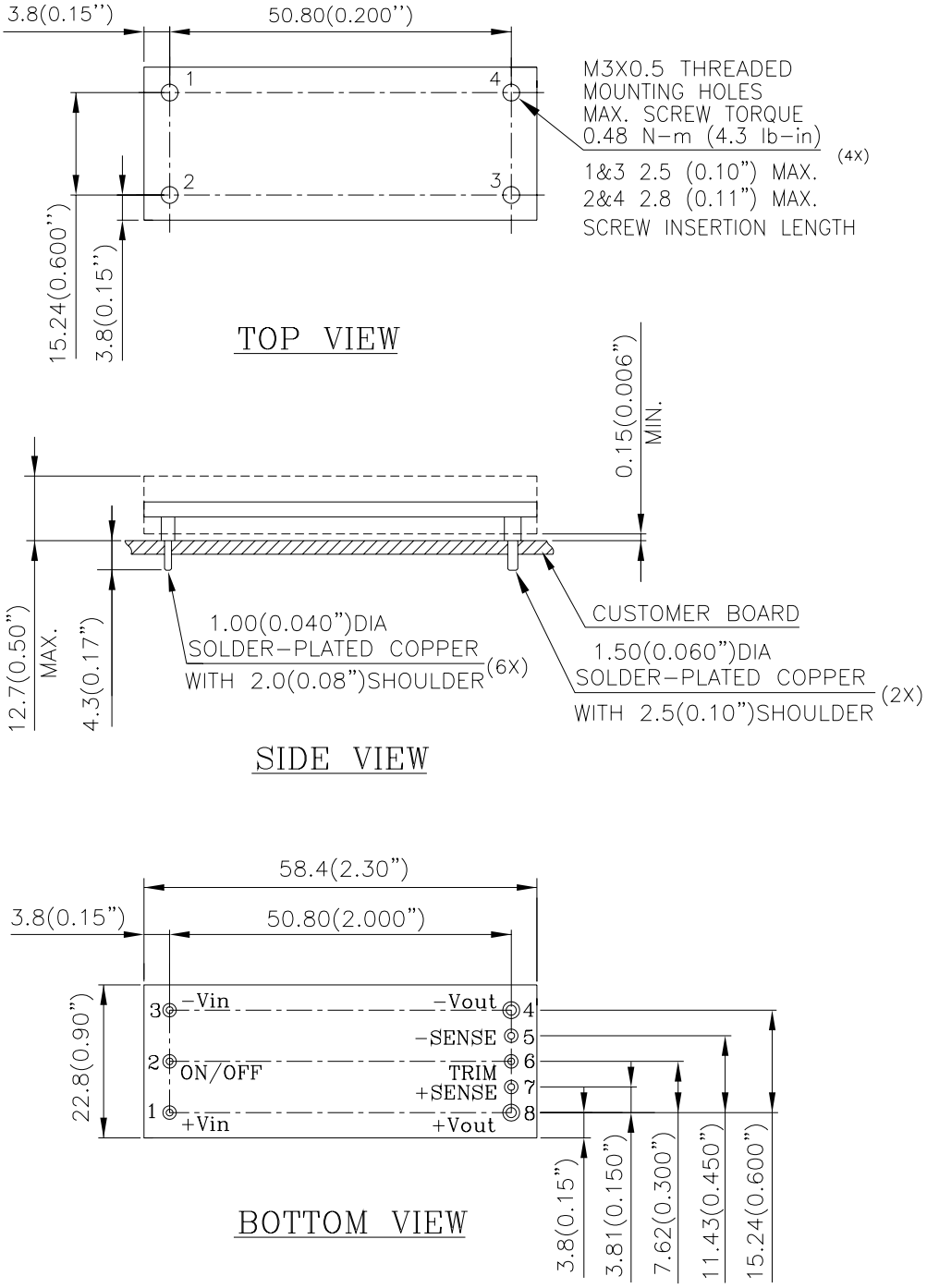

NOTES:
DIMENSIONS ARE IN MILLIMETERS AND (INCHES)
TOLERANCES: X.Xmm±0.5mm(X.XX in.±0.02 in.)
X.XXmm±0.25mm(X.XXX in.±0.010 in.)

PART NUMBERING SYSTEM

E	48	S	H	1R5	40	N	R	F	A
Type of Product	**Input Voltage**	**Number of Outputs**	**Product Series**	**Output Voltage**	**Output Current**	**ON/OFF Logic**	**Pin Length /Type**		**Option Code**
E- Eighth Brick	48-36V~75V	S- Single	H-50A series	1R5 - 1.5V	40 - 40A	N- Negative P- Positive	R- 0.170” N- 0.145” K- 0.110” M- SMD	F-RoHS 6/6 (Lead Free)	A- Standard Functions H - with heatspreader

MODEL LIST

MODEL NAME	INPUT		OUTPUT		EFF @ 100% LOAD
E48SH1R250NRFA	36V~75V	2.3A	1.2V	50A	86.5%
E48SH1R540NRFA	36V~75V	2.2A	1.5V	40A	89%
E48SH1R840NRFA	36V~75V	2.7A	1.8V	40A	90%
E48SH2R535NRFA	36V~75V	2.9A	2.5V	35A	89.5%
E48SH3R330NRFA	36V~75V	3.6A	3.3V	30A	92%
E48SH05020NRFA	36V~75V	3.7A	5.0V	20A	90%
E48SH12010NRFA	36V~75V	4.3A	12V	10A	93.5%

Default remote on/off logic is negative and pin length is 0.170”
For different remote on/off logic and pin length, please refer to part numbering system above or contact your local sales office.

CONTACT: www.delta.com.tw/dcdc

USA:
Telephone:
East Coast: (888) 335 8201
West Coast: (888) 335 8208
Fax: (978) 656 3964
Email: DCDC@delta-corp.com

Europe:
Telephone: +41 31 998 53 11
Fax: +41 31 998 53 53
Email: DCDC@delta-es.tw

Asia & the rest of world:
Telephone: +886 3 4526107 x 6220
Fax: +886 3 4513485
Email: DCDC@delta.com.tw

WARRANTY

Delta offers a two (2) year limited warranty. Complete warranty information is listed on our web site or is available upon request from Delta.

Information furnished by Delta is believed to be accurate and reliable. However, no responsibility is assumed by Delta for its use, nor for any infringements of patents or other rights of third parties, which may result from its use. No license is granted by implication or otherwise under any patent or patent rights of Delta. Delta reserves the right to revise these specifications at any time, without notice.