PART NO.	DESCRIPTION	
A70-000627-LG	LIGHT GREY	RAL 7001
A70-000627-DG	DARK GREY	RAL 7011
A70-000627-BK	BLACK	RAL 9005
A70-000627-WH	WHITE	RAL 9010

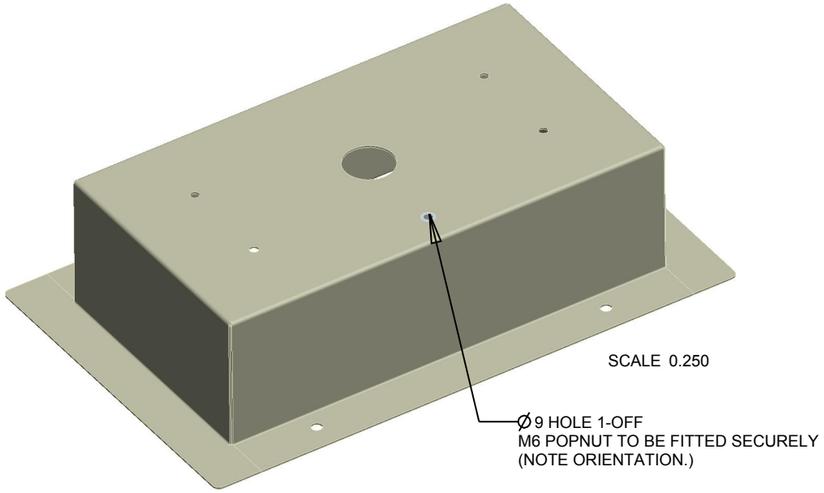

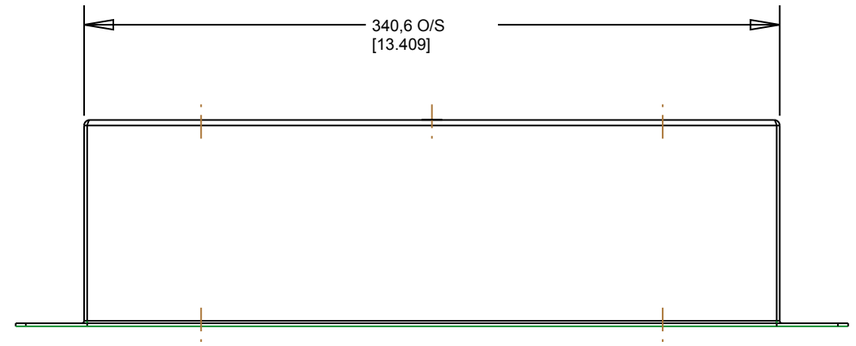

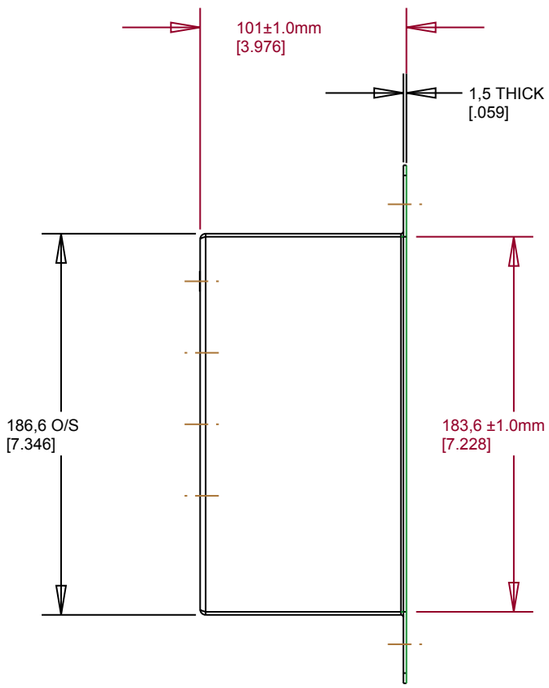

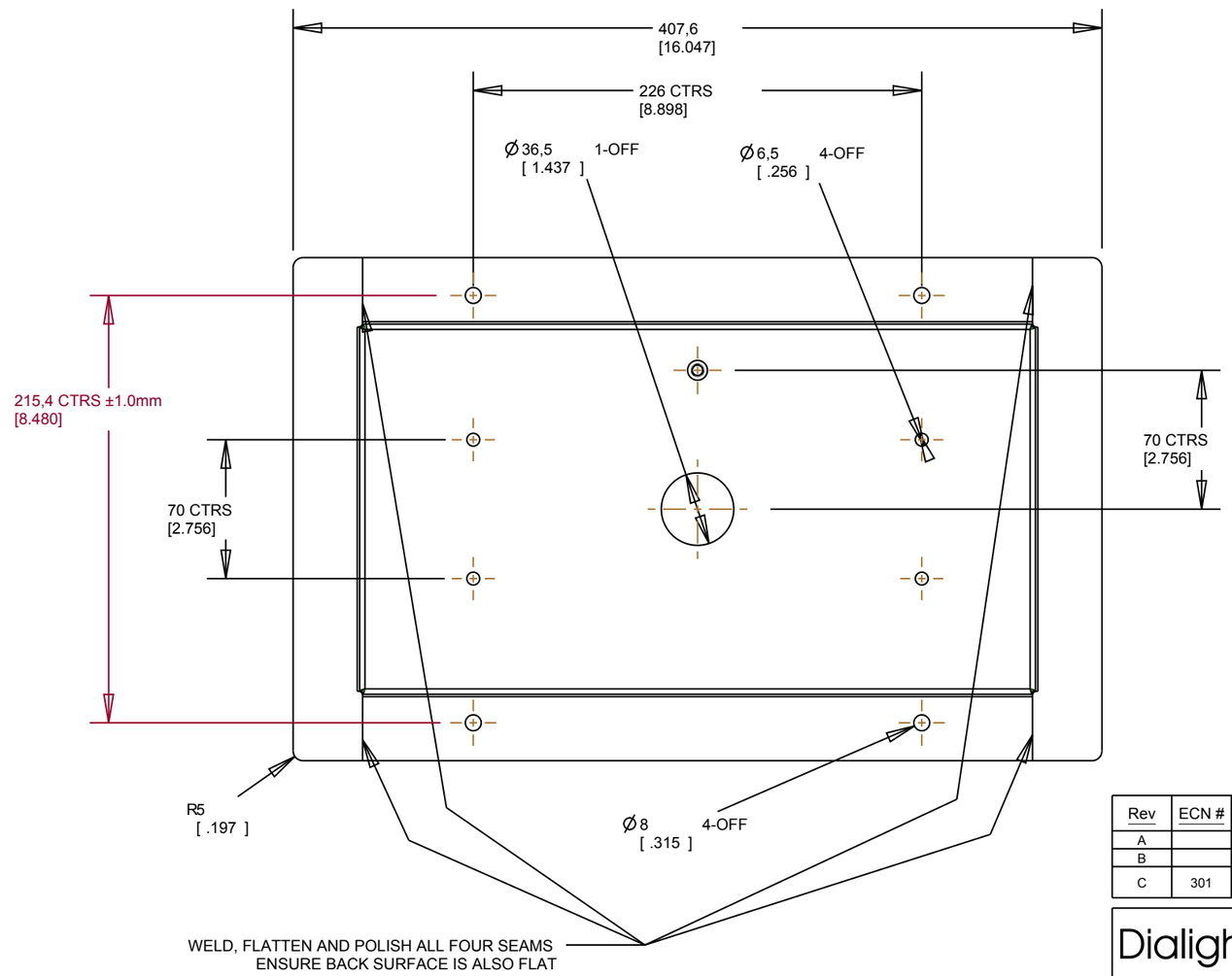

NOTES:

1. PLEASE REFER TO 3D CAD FILE FOR ADDITIONAL DIMENSIONS. FILE ISSUE MUST MATCH DRAWING ISSUE.
2. POWDERCOAT ALL SURFACES -- CERTICATE OF CONFORMITY TO BE SUPPLIED WITH EACH BATCH.
3. POWDERCOAT TO BE MATT FINISH WITH NO TEXTURE (SEE TABLE.)
4. NO CHANGES WITHOUT DIALIGHT ENGINEERING APPROVAL.
5. ONLY RoHS AND REACH COMPLIANT MATERIAL ACCEPTED.
6. THREADED INSERT TO BE SECURED PRESSED IN PLACE.

Rev	ECN #	Description	Drawn	Check	App'd	Q.C.	Date
A		FIRST ISSUE	CJG	GEA	DW	FT	1-JUN-2010
B		SCREW EARTH	CJG	GEA	DW	FT	24-JUN-2010
C	301	WELDED CORNERS CORNER RADS	CJG	GEA	DW	FT	11-OCT-2010

Dialight

This drawing and all information contained is the property of Dialight.
Unauthorised copying or disclosure is forbidden. All Dimensions in mm [Inches.]
Imperial dimensions are for reference only, don't use for machining.
Features coloured in red to be checked during Goods In inspection.
Unless otherwise stated tolerances: X=±0.5mm, X.X=±0.2mm, X.XX=±0.1mm, angles: ±1°

Material: ZINTEC
Finish: SEE NOTES

Description:
RECESSED CEILING MOUNT -- WPA
MAIN BODY

Paper Size:	Scale:	Drawing Number:	Revision:
A3	0.333	A70-000627 Sheet 1 of 1	C