WINBOND

ISA I/O

W83977EF

W83977EG

Revision History

	PAGES	DATES	VERSION	VERSION ON WEB	MAIN CONTENTS
1	n.a.	12/30/03			Remove W83977CTF Part
2		03/07/03			Update the new version on web
3	P86~P110	04/25/03			Add Chapter 10 Configuration Register
4	n.a.	04/25/06			Add Pb-free part no:W83977EG

LIFE SUPPORT APPLICATIONS

These products are not designed for use in life support appliances, devices, or systems where malfunction of these products can reasonably be expected to result in personal injury. Winbond customers using or selling these products for use in such applications do so at their own risk and agree to fully indemnify Winbond for any damages resulting from such improper use or sales.

winbond

Tables of Contents-

1. GENERAL DESCRIPTION 5
2. FEATURES 6
3. PIN CONFIGURATION 8
4. PIN DESCRIPTION 9
   - 4.1 Host Interface 9
   - 4.2 General Purpose I/O Port 11
   - 4.3 Serial Port Interface 11
   - 4.4 Infrared Interface 12
   - 4.5 Multi-Mode Parallel Port 13
   - 4.6 FDC Interface 17
   - 4.7 KBC Interface 18
   - 4.8 POWER PINS 18
   - 4.9 ACPI Interface 18
5. FDC FUNCTIONAL DESCRIPTION 19
   - 5.1 W83977EF/EG FDC 19
     - 5.1.1 AT interface 19
     - 5.1.2 FIFO (Data) 19
     - 5.1.3 Data Separator 20
     - 5.1.4 Write Precompensation 20
     - 5.1.5 Perpendicular Recording Mode 20
     - 5.1.6 FDC Core 21
     - 5.1.7 FDC Commands 21
   - 5.2 Register Descriptions 32
     - 5.2.1 Status Register A (SA Register) (Read base address + 0) 32
     - 5.2.2 Status Register B (SB Register) (Read base address + 1) 34
     - 5.2.3 Digital Output Register (DO Register) (Write base address + 2) 36
     - 5.2.4 Tape Drive Register (TD Register) (Read base address + 3) 36
     - 5.2.5 Main Status Register (MS Register) (Read base address + 4) 37
     - 5.2.6 Data Rate Register (DR Register) (Write base address + 4) 37
     - 5.2.7 FIFO Register (R/W base address + 5) 39
     - 5.2.8 Digital Input Register (DI Register) (Read base address + 7) 41
     - 5.2.9 Configuration Control Register (CC Register) (Write base address + 7) 42
6. UART PORT 44
   - 6.1 Universal Asynchronous Receiver/Transmitter (UART A, UART B) 44
   - 6.2 Register Address 44
     - 6.2.1 UART Control Register (UCR) (Read/Write) 44
     - 6.2.2 UART Status Register (USR) (Read/Write) 47
     - 6.2.3 Handshake Control Register (HCR) (Read/Write) 48
     - 6.2.4 Handshake Status Register (HSR) (Read/Write) 48
     - 6.2.5 UART FIFO Control Register (UFR) (Write only) 49

6.2.6 Interrupt Status Register (ISR) (Read only) 50
6.2.7 Interrupt Control Register (ICR) (Read/Write) 51
6.2.8 Programmable Baud Generator (BLL/BHL) (Read/Write) 51
6.2.9 User-defined Register (UDR) (Read/Write) 52
7. PARALLEL PORT 53
7.1 Printer Interface Logic 53
7.2 Enhanced Parallel Port (EPP) 54
7.2.1 Data Swapper 55
7.2.2 Printer Status Buffer 55
7.2.3 Printer Control Latch and Printer Control Swapper 56
7.2.4 EPP Address Port 56
7.2.5 EPP Data Port 0-3 57
7.2.6 Bit Map of Parallel Port and EPP Registers 57
7.2.7 EPP Pin Descriptions 58
7.2.8 EPP Operation 58
7.3 Extended Capabilities Parallel (ECP) Port 59
7.3.1 ECP Register and Mode Definitions 59
7.3.2 Data and ecpAFifo Port 60
7.3.3 Device Status Register (DSR) 60
7.3.4 Device Control Register (DCR) 61
7.3.5 CFIFO (Parallel Port Data FIFO) Mode = 010 62
7.3.6 ECPDFIFO (ECP Data FIFO) Mode = 011 62
7.3.7 TFIFO (Test FIFO Mode) Mode = 110 62
7.3.8 CNFGA (Configuration Register A) Mode = 111 62
7.3.9 CNFGB (Configuration Register B) Mode = 111 62
7.3.10 ECR (Extended Control Register) Mode = all 63
7.3.11 Bit Map of ECP Port Registers 64
7.3.12 ECP Pin Descriptions 65
7.3.13 ECP Operation 66
7.3.14 FIFO Operation 66
7.3.15 DMA Transfers 67
7.3.16 Programmed I/O (NON-DMA) Mode 67
7.4 Extension FDD Mode (EXTFDD) 67
7.5 Extension 2FDD Mode (EXT2FDD) 67
8. KEYBOARD CONTROLLER 68
8.1 Output Buffer 68
8.2 Input Buffer 68
8.3 Status Register 69
8.4 Commands 70
8.5 Hardware GATEA20/Keyboard Reset Control Logic 71
8.5.1 KB Control Register (Logic Device 5, CR-F0) 71
8.5.2 Port 92 Control Register (Default Value = 0x24) 72

8.6 OnNow / Security Keyboard and Mouse Wake-Up 73
8.6.1 Keyboard Wake-Up Function 73
8.6.2 Keyboard Password Wake-Up Function 73
8.6.3 Mouse Wake-Up Function 73
9. GENERAL PURPOSE I/O 74
9.1 Basic I/O functions 76
9.2 Alternate I/O Functions 78
9.2.1 Interrupt Steering 78
9.2.2 Watch Dog Timer Output 78
9.2.3 Power LED 79
9.2.4 General Purpose Address Decoder 79
10. PLUG AND PLAY CONFIGURATION 80
10.1 Compatible PnP 80
10.1.1 Extended Function Registers 80
10.1.2 Extended Functions Enable Registers (EFERs) 81
10.1.3 Extended Function Index Registers (EFIRs), Extended Function Data Registers(EFDRs) 81
10.2 Configuration Sequence 81
10.2.1 Enter the extended function mode 81
10.2.2 Configurate the configuration registers 82
10.2.3 Exit the extended function mode 82
10.2.4 Software programming example 82
11. ACPI REGISTERS FEATURES 83
12. CONFIGURATION REGISTER 84
12.1 Chip (Global) Control Register 84
12.2 Logical Device 0 (FDC) 90
12.3 Logical Device 1 (Parallel Port) 94
12.4 Logical Device 2 (UART A)¢) 95
12.5 Logical Device 3 (UART B) 95
12.6 Logical Device 5 (KBC) 97
12.7 Logical Device 7 (GP I/O Port I) 98
12.8 Logical Device 8 (GP I/O Port II) 101
12.9 Logical Device A (ACPI) 105
13. SPECIFICATIONS 112
13.1 Absolute Maximum Ratings 112
13.2 DC CHARACTERISTICS 112
13.3 AC Characteristics 116
13.3.1 FDC: Data rate = 1 MB, 500 KB, 300 KB, 250 KB/sec. 116
13.3.2 UART/Parallel Port 118
13.3.3 Parallel Port Mode Parameters 118
13.3.4 EPP Data or Address Read Cycle Timing Parameters 119

13.3.5 EPP Data or Address Write Cycle Timing Parameters 120
13.3.6 Parallel Port FIFO Timing Parameters 121
13.3.7 ECP Parallel Port Forward Timing Parameters 121
13.3.8 ECP Parallel Port Reverse Timing Parameters 121
13.3.9 KBC Timing Parameters 122
13.3.10 GPIO Timing Parameters 123
13.3.11 Keyboard/Mouse Timing Parameters 123
14. TIMING WAVEFORMS 124
14.1 14.1 FDC 124
14.2 UART/Parallel 125
14.2.1 Modem Control Timing 126
14.3 Parallel Port 127
14.3.1 Parallel Port Timing 127
14.3.2 EPP Data or Address Read Cycle (EPP Version 1.9) 128
14.3.3 EPP Data or Address Write Cycle (EPP Version 1.9) 129
14.3.4 EPP Data or Address Read Cycle (EPP Version 1.7) 130
14.3.5 EPP Data or Address Write Cycle (EPP Version 1.7) 131
14.3.6 Parallel Port FIFO Timing 131
14.3.7 ECP Parallel Port Forward Timing 132
14.3.8 ECP Parallel Port Reverse Timing 132
14.4 KBC 133
14.4.1 Write Cycle Timing 133
14.4.2 Read Cycle Timing 133
14.4.3 Receive Data from K/B 134
14.4.4 Input Clock 134
14.4.5 Send Data to Mouse 134
14.4.6 Receive Data from Mouse 134
14.5 GPIO Write Timing Diagram 135
14.5.1 Master Reset (MR) Timing 135
14.6 Keyboard/Mouse Wake-up Timing 135
15. APPLICATION CIRCUITS 136
15.1 Parallel Port Extension FDD 136
15.2 Parallel Port Extension 2FDD 137
15.3 Four FDD Mode 137
16. ORDERING INFORMATION 138
17. HOW TO READ THE TOP MARKING 138
18. PACKAGE DIMENSIONS 139

1. GENERAL DESCRIPTION

W83977EF/EG is an evolving product from Winbond's most popular I/O chip W83877F --- which integrates the disk drive adapter, serial port (UART), IrDA 1.0 SIR, parallel port, configurable plug-and-play registers for the whole chip --- plus additional powerful features: **ACPI**, 8042 keyboard controller with PS/2 mouse support, 14 general purpose I/O ports, full 16-bit address decoding, OnNow keyboard Wake-Up, OnNow mouse Wake-Up.

The disk drive adapter functions of **W83977EF/EG** include a floppy disk drive controller compatible with the industry standard 82077/ 765, data separator, write pre-compensation circuit, decode logic, data rate selection, clock generator, drive interface control logic, and interrupt and DMA logic. The wide range of functions integrated onto the W83977EF greatly reduces the number of components required for interfacing with floppy disk drives. The **W83977EF** supports four 360K, 720K, 1.2M, 1.44M, or 2.88M disk drives and data transfer rates of 250 Kb/s, 300 Kb/s, 500 Kb/s,1 Mb/s, and 2 Mb/s.

W83977EF/EG provides two high-speed serial communication ports (UARTs), one of which supports serial Infrared communication. Each UART includes a 16-byte send/receive FIFO, a programmable baud rate generator, complete modem control capability, and a processor interrupt system. Both UARTs provide legacy speed with baud rate up to 115.2k bps and also advanced speed with baud rates of **230k**, **460k**, or **921k bps** which support higher speed modems.

W83977EF/EG supports one PC-compatible printer port (SPP), Bi-directional Printer port (BPP) and also Enhanced Parallel Port (EPP) and Extended Capabilities Port (ECP). Through the printer port interface pins, also available are: Extension FDD Mode and Extension 2FDD Mode allowing one or two external floppy disk drives to be connected.

The configuration registers support mode selection, function enable/disable, and power down function selection. Furthermore, the configurable PnP features are compatible with the plug-and-play feature demand of Windows 95™, which makes system resource allocation more efficient than ever.

W83977EF/EG provides functions that complies with **ACPI** (*Advanced Configuration and Power Interface*), which includes support of legacy and ACPI power management through $\overline{\text{SMI}}$ or $\overline{\text{SCI}}$ function pins. **W83977EF/EG** also has auto power management to reduce power consumption.

The keyboard controller is based on 8042 compatible instruction set with a 2K Byte programmable ROM and a 256-Byte RAM bank. Keyboard BIOS firmware are available with optional AMIKEY™-2, Phoenix MultiKey/42™, or customer code.

W83977EF/EG provides a set of flexible I/O control functions to the system designer through a set of General Purpose I/O ports. These GPIO ports may serve as simple I/O or may be individually configured to provide a predefined alternate function.

W83977EF/EG *also supports Power-loss control, and makes the system never miss to detect any Wake-Up event provided by the chipset such as INTEL PIIX4™.*

W83977EF is made to fully comply with **Microsoft PC98 Hardware Design Guide**. IRQs, DMAs, and I/O space resource are flexible to adjust to meet ISA PnP requirement. Moreover **W83977EF/EG** is made to meet the specification of PC98's requirement in the power management: **ACPI** and **DPM** (Device Power Management).

Another benifit is that **W83977EF/EG** is of the same pin assignment of W83977AF, W83977F, W83977TF, W83977ATF. Thus makes the design very flexible.

2. FEATURES

General

- Plug & Play 1.0A compatible
- Support 12 IRQs, 4 DMA channels, full 16-bit address decoding
- Capable of ISA Bus IRQ Sharing
- Compliant with **Microsoft PC98** Hardware Design Guide
- Support **DPM** (Device Power Management), **ACPI**
- Report ACPI status interrupt by SCI# signal issued from any of the 12 IQRs pins or GPIO xx
- Programmable configuration settings
- single 24/48 Mhz clock input
-

FDC

- Compatible with IBM PC AT disk drive systems
- Variable write pre-compensation with track selectable capability
- Support vertical recording format
- DMA enable logic
- 16-byte data FIFOs
- Support floppy disk drives and tape drives
- Detects all overrun and underrun conditions
- Built-in address mark detection circuit to simplify the read electronics
- FDD anti-virus functions with software write protect and FDD write enable signal (write data signal was forced to be inactive)
- Support up to four 3.5-inch or 5.25-inch floppy disk drives
- Completely compatible with industry standard 82077
- 360K/720K/1.2M/1.44M/2.88M format; 250K, 300K, 500K, 1M, 2M bps data transfer rate
- Support **3-mode FDD, and its Win95 driver**

UART

- Two high-speed 16550 compatible UARTs with 16-byte send/receive FIFOs
- MIDI compatible
- Fully programmable serial-interface characteristics:
  - --- 5, 6, 7 or 8-bit characters
  - --- Even, odd or no parity bit generation/detection
  - --- 1, 1.5 or 2 stop bits generation
- Internal diagnostic capabilities:
  - --- Loop-back controls for communications link fault isolation
  - --- Break, parity, overrun, framing error simulation
- Programmable baud generator allows division of 1.8461 Mhz and 24 Mhz by 1 to (2^{16}-1)
- Maximum baud rate up to **921k bps** for 14.769 Mhz and 1.5M bps for 24 Mhz

Infrared

- Support IrDA version 1.0 SIR protocol with maximum baud rate up to 115.2K bps
- Support SHARP ASK-IR protocol with maximum baud rate up to 57,600 bps

Parallel Port

- Compatible with IBM parallel port
- Support PS/2 compatible bi-directional parallel port
- Support Enhanced Parallel Port (EPP) – Compatible with IEEE 1284 specification
- Support Extended Capabilities Port (ECP) – Compatible with IEEE 1284 specification
- Extension FDD mode supports disk drive B; and Extension 2FDD mode supports disk drives A and B through parallel port
- Enhanced printer port back-drive current protection

Keyboard Controller

- 8042 based with optional F/W from AMIKKEY™-2, Phoenix MultiKey/42™ or customer code
- With 2K bytes of programmable ROM, and 256 bytes of RAM
- Asynchronous Access to Two Data Registers and One status Register
- Software compatibility with the 8042 and PC87911 microcontrollers
- Support PS/2 mouse
- Support port 92
- Support both interrupt and polling modes
- **Fast Gate A20 and Hardware Keyboard Reset**
- 8 Bit Timer/ Counter
- Support binary and BCD arithmetic
- 6MHz, 8 MHz, 12 MHz, or 16 MHz operating frequency

General Purpose I/O Ports

- 14 programmable general purpose I/O ports; 6 dedicate, 8 optional
- General purpose I/O ports can serve as simple I/O ports, interrupt steering inputs, watching dog timer output, power LED output, infrared I/O pins, general purpose address decoder, KBC control I/O pins

OnNow Funtions

- Keyboard Wake-Up by programmable keys
- Mouse Wake-Up by programmable buttons

Package

- 128-pin PQFP

3. PIN CONFIGURATION

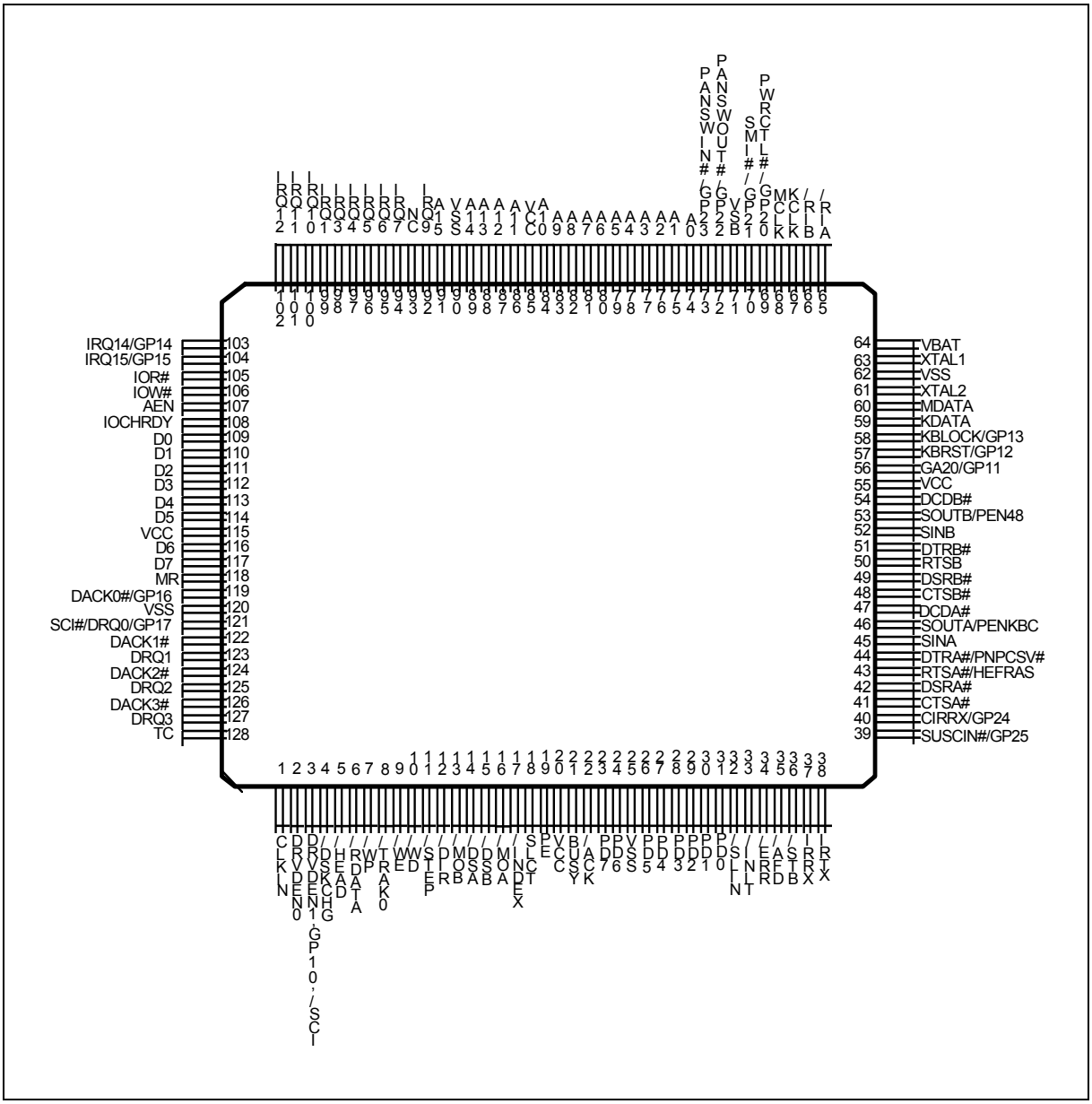

4. PIN DESCRIPTION

Note: Please refer to Section 11.2 DC CHARACTERISTICS for details.

I/O_{6t} - TTL level bi-directional pin with 6 mA source-sink capability
I/O_{8t} - TTL level bi-directional pin with 8 mA source-sink capability
I/O_{8} - CMOS level bi-directional pin with 8 mA source-sink capability
I/O_{12t} - TTL level bi-directional pin with 12 mA source-sink capability
I/O_{12} - CMOS level bi-directional pin with 12 mA source-sink capability
I/O_{16u} - CMOS level bi-directional pin with 16 mA source-sink capability with internal pull-up resistor
I/OD_{16u} - CMOS level bi-directional pin open drain output with 16 mA sink capability with internal pull-up resistor
I/O_{24t} - TTL level bi-directional pin with 24 mA source-sink capability
OUT_{8t} - TTL level output pin with 8 mA source-sink capability
OUT_{12t} - TTL level output pin with 12 mA source-sink capability
OD_{12} - Open-drain output pin with 12 mA sink capability
OD_{24} - Open-drain output pin with 24 mA sink capability
IN_{t} - TTL level input pin
IN_{c} - CMOS level input pin
IN_{cu} - CMOS level input pin with internal pull-up resitor
IN_{cs} - CMOS level Schmitt-triggered input pin
IN_{ts} - TTL level Schmitt-triggered input pin
IN_{tsu} - TTL level Schmitt-triggered input pin with internal pull-up resistor

4.1 Host Interface

SYMBOL	PIN	I/O	FUNCTION
A0–A10	74-84	IN_{t}	System address bus bits 0-10
A11-A14	86-89	IN_{t}	System address bus bits 11-14
A15	91	IN_{t}	System address bus bit 15
D0–D5	109-114	I/O_{12t}	System data bus bits 0-5
D6–D7	116-117	I/O_{12t}	System data bus bits 6-7
IOR#	105	IN_{ts}	CPU I/O read signal
IOW#	106	IN_{ts}	CPU I/O write signal
AEN	107	IN_{ts}	System address bus enable
IOCHRDY	108	OD_{24}	In EPP Mode, this pin is the IO Channel Ready output to extend the host read/write cycle.
MR	118	IN_{ts}	Master Reset; Active high; MR is low during normal operations.
DACK0#	119	IN_{tsu}	DMA Channel 0 Acknowledge signal. (CR2C bit 5_4 = 00, default)
GP16		I/O_{12t}	General purpose I/O port 1bit 6. (CR2C bit 5_4 = 01)
(WDTO)			Alternate function from GP16: Watch dog timer output
P15		I/O_{12t}	KBC P15 I/O port. (CR2C bit 5_4 = 10)

Host Interface , continted.

SYMBOL	PIN	I/O	FUNCTION
DRQ0	121	OUT12t	DMA Channel 0 request signal. (CR2C bit 7_6 = 00, default)
GP17 (PLEDO)		I/O_{12t}	General purpose I/O port 1bit 7. (CR2C bit 7_6 = 01) Alternate Function from GP17: Power LED output.
P14		I/O_{12t}	KBC P14 I/O port (CR2C bit 7_6 = 10)
SCI#		OUT_{12t}	System Control Interrupt (CR2C bit 7_6 = 11)
DACK1#	122	IN_{ts}	DMA Channel 1 Acknowledge signal
DRQ1	123	OUT_{12t}	DMA Channel 1 request signal
DACK2#	124	IN_{ts}	DMA Channel 2 Acknowledge signal
DRQ2	125	OUT_{12t}	DMA Channel 2 request signal
DACK3#	126	IN_{ts}	DMA Channel 3 Acknowledge signal
DRQ3	127	OUT_{12t}	DMA Channel 3 request signal
TC	128	IN_{ts}	Terminal Count. When active, this pin indicates termination of a DMA transfer.
IRQ1	99	OUT_{12t}	Interrupt request 1
IRQ3	98	OUT_{12t}	Interrupt request 3
IRQ4	97	OUT_{12t}	Interrupt request 4
IRQ5	96	OUT_{12t}	Interrupt request 5
IRQ6	95	OUT_{12t}	Interrupt request 6
IRQ7	94	OUT_{12t}	Interrupt request 7
IRQ9	92	OUT_{12t}	Interrupt request 9
IRQ10	100	OUT_{12t}	Interrupt request 10
IRQ11	101	OUT_{12t}	Interrupt request 11
IRQ12	102	OUT_{12t}	Interrupt request 12
IRQ14	103	OUT12t	Interrupt request 14. (CR2C bit 1_0 = 00, default)
GP14		I/O12t	General purpose I/O port 1 bit 4. (CR2C bit 1_0 = 01)
(GPACS1#)			Alternate Function 1 from GP14: General purpose address decode output.
(P17)			Alternate Function 2 from GP14: KBC P17 I/O port.
PLEDO		OUT12t	Power LED output. (CR2C bit 1_0 = 10)
IRQ15	104	OUT_{12t}	Interrupt request 15.(CR2C bit 3_2 = 00, default)
GP15 (GPACS2#)		I/O_{12t}	General purpose I/O port 1 bit 5. (CR2C bit 3_2 = 01) Alternate Function 1 from GP15: General purpose address write enable output.
(P12)			Alternate Function 2 from GP15: KBC P12 I/O port.
WDT		OUT_{12t}	Watch-Dog timer output. (CR2C bit 3_2 = 10)
CLKIN	1	IN_t	24 or 48 MHz clock input, selectable through bit 5 of CR24.

4.2 General Purpose I/O Port

SYMBOL	PIN	I/O	FUNCTION
PWR_CTL#	69	OD_{16u}	Power supply control
GP20 (KBRST)		I/O_{16tu}	General purpose I/O port 2 bit 0. Alternate Function from GP20: Keyboard reset (KBC P20)
SMI #	70	OD_{12t}	For the power management, the $\overline{SMI}$ is active low by the power management events, that generate and $\overline{SCI}$ in ACPI mode. (CR2B bit 4_3 = 00, default)
GP21		I/O_{12t}	General purpose I/O port 2 bit 1. (CR2B bit 4_3 = 01)
(P13)			Alternate Function from GP21: KBC P13 I/O port.
P16		I/O_{12t}	KBC P16 I/O port. (CR2B bit 4_3 = 10)
PANSWOT# GP22	72	OD_{12t} I/O_{12t}	Panel Switch output. (CR2B bit 5 = 0, default) General purpose I/O port 2 bit 2. (CR2B bit 5 = 1)
(P14)			Alternate Function from GP22: KBC P14 I/O port.
PANSWIN# GP23	73	IN_t I/O_{12t}	Panel Switch input. (CR2B bit 7_6 = 00, default) General purpose I/O port 2 bit 3. (CR2B bit 7_6 = 01)
(P15)			Alternate Function from GP23: KBC P15 I/O port
SUSC# (GA20)	39	IN_{ts}	Suspend C input Alternate Function from GP25: GATE A20 (KBC P21)
GP25		I/O_{12}	General purpose I/O port 2 bit 5.

4.3 Serial Port Interface

SYMBOL	PIN	I/O	FUNCTION
CTSA# CTSB#	41 48	IN_t	Clear To Send is the modem control input. The function of these pins can be tested by reading Bit 4 of the handshake status register.
DSRA# DSRB#	42 49	IN_t	Data Set Ready. An active low signal indicates the modem or data set is ready to establish a communication link and transfer data to the UART.
RTSA#	43	I/O_{8t}	UART A Request To Send. An active low signal informs the modem or data set that the controller is ready to send data.
HEFRAS			During power-on reset, this pin is pulled down internally and is defined as HEFRAS, which provides the power-on value for CR26 bit 6 (HEFRAS). A 4.7 kΩ is recommended if intends to pull up. (select 370H as configuration I/O port's address)

Serial Port Interface, continued

RTSB#	50	I/O_{8t}	UART B Request To Send. An active low signal informs the modem or data set that the controller is ready to send data.
DTRA# PNPCSV#	44	I/O_{8t}	UART A Data Terminal Ready. An active low signal informs the modem or data set that the controller is ready to communicate. During power-on reset, this pin is pulled down internally and is defined as PNPCSV#, which provides the power-on value for CR24 bit 0 (PNPCSV#). A 4.7 kΩ is recommended if intends to pull up. (clear the default value of FDC, UARTs, and PRT)
DTRB#	51	I/O_{8t}	UART B Data Terminal Ready. An active low signal informs the modem or data set that controller is ready to communicate.
SINA SINB	45, 52	IN_t	Serial Input. Used to receive serial data through the communication link.
SOUTA	46	I/O_{8t}	UART A Serial Output. Used to transmit serial data out to the communication link.
PENKBC			During power-on reset, this pin is pulled down internally and is defined as PENKBC, which provides the power-on value for CR24 bit 2 (ENKBC). A 4.7 kΩ resistor is recommended if intends to pull up. (enable KBC)
SOUTB PEN48	53	I/O_{8t}	UART B Serial Output. During power-on reset, this pin is pulled down internally and is defined as PEN48, which provides the power-on value for CR24 bit 6 (EN48). A 4.7 kΩ resistor is recommended if intends to pull up.
DCDA# DCDB#	47 54	IN_t	Data Carrier Detect. An active low signal indicates the modem or data set has detected a data carrier.
RIA# RIB#	65 66	IN_t	Ring Indicator. An active low signal indicates that a ring signal is being received from the modem or data set.

4.4 Infrared Interface

SYMBOL	PIN	I/O	FUNCTION
IRRX	37	IN_{cs}	Infrared Receiver input.
IRTX	38	OUT_{12t}	Infrared Transmitter Output.

4.5 Multi-Mode Parallel Port

The following pins have alternate functions, which are controlled by CR28 and L3-CRF0.

SYMBOL	PIN	I/O	FUNCTION
SLCT	18	IN_t OD_{12} OD_{12}	PRINTER MODE: SLCT An active high input on this pin indicates that the printer is selected. This pin is pulled high internally. Refer to description of the parallel port for definition of this pin in ECP and EPP mode. EXTENSION FDD MODE: WE2# This pin is for Extension FDD B; its function is the same as the WE# pin of FDC. EXTENSION 2FDD MODE: WE2# This pin is for Extension FDD A and B; it function is the same as the WE# pin of FDC.
PE	19	IN_t OD_{12} OD_{12}	PRINTER MODE: PE An active high input on this pin indicates that the printer has detected the end of the paper. This pin is pulled high internally. Refer to description of the parallel port for definition of this pin in ECP and EPP mode. EXTENSION FDD MODE: WD2# This pin is for Extension FDD B; its function is the same as the WD# pin of FDC. EXTENSION 2FDD MODE: WD2# This pin is for Extension FDD A and B; its function is the same as the WD# pin of FDC.
BUSY	21	IN_t OD_{12} OD_{12}	PRINTER MODE: BUSY An active high input indicates that the printer is not ready to receive data. This pin is pulled high internally. Refer to description of the parallel port for definition of this pin in ECP and EPP mode. EXTENSION FDD MODE: MOB2# This pin is for Extension FDD B; the function of this pin is the same as the MOB# pin of FDC. EXTENSION 2FDD MODE:MOB2# This pin is for Extension FDD A and B; the function of this pin is the same as the MOB# pin of FDC.
ACK#	22	IN_t OD_{12} OD_{12}	PRINTER MODE: ACK# An active low input on this pin indicates that the printer has received data and is ready to accept more data. This pin is pulled high internally. Refer to description of the parallel port for definition of this pin in ECP and EPP mode. EXTENSION FDD MODE: DSB2# This pin is for the Extension FDD B; its functions is the same as the DSB# pin of FDC. EXTENSION 2FDD MODE: DSB2# This pin is for Extension FDD A and B; it functions is the same as the DSB# pin of FDC.

Multi-Mode Parallel Port, continued

SYMBOL	PIN	I/O	FUNCTION
ERR#	34	IN_t	PRINTER MODE: ERR# An active low input on this pin indicates that the printer has encountered an error condition. This pin is pulled high internally. Refer to description of the parallel port for definition of this pin in ECP and EPP mode.
		OD_{12}	EXTENSION FDD MODE: HEAD2# This pin is for Extension FDD B; its function is the same as the HEAD#pin of FDC.
		OD_{12}	EXTENSION 2FDD MODE: HEAD2# This pin is for Extension FDD A and B; its function is the same as the HEAD# pin of FDC.
SLIN#	32	OD_{12}	PRINTER MODE: SLIN# Output line for detection of printer selection. This pin is pulled high internally. Refer to description of the parallel port for definition of this pin in ECP and EPP mode.
		OD_{12}	EXTENSION FDD MODE:STEP2# This pin is for Extension FDD B; its function is the same as the STEP# pin of FDC.
		OD_{12}	EXTENSION 2FDD MODE: STEP2# This pin is for Extension FDD A and B; its function is the same as the STEP# pin of FDC.
INIT#	33	OD_{12}	PRINTER MODE: INIT# Output line for the printer initialization. This pin is pulled high internally. Refer to description of the parallel port for definition of this pin in ECP and EPP mode.
		OD_{12}	EXTENSION FDD MODE: DIR2# This pin is for Extension FDD B; its function is the same as the DIR# pin of FDC.
		OD_{12}	EXTENSION 2FDD MODE: DIR2# This pin is for Extension FDD A and B; its function is the same as the DIR# pin of FDC.
AFD#	35	OD_{12}	PRINTER MODE: AFD# An active low output from this pin causes the printer to auto feed a line after a line is printed. This pin is pulled high internally. Refer to description of the parallel port for definition of this pin in ECP and EPP mode.
		OD_{12}	EXTENSION FDD MODE: DRVDEN0 This pin is for Extension FDD B; its function is the same as the DRVDEN0 pin of FDC.
		OD_{12}	EXTENSION 2FDD MODE: DRVDEN0 This pin is for Extension FDD A and B; its function is the same as the DRVDEN0 pin of FDC.

Multi-Mode Parallel Port, continued

SYMBOL	PIN	I/O	FUNCTION
STB#	36	OD_{12}	PRINTER MODE: STB# An active low output is used to latch the parallel data into the printer. This pin is pulled high internally. Refer to description of the parallel port for definition of this pin in ECP and EPP mode.
		-	EXTENSION FDD MODE: This pin is a tri-state output.
		-	EXTENSION 2FDD MODE: This pin is a tri-state output.
PD0	31	I/O_{24t}	PRINTER MODE: PD0 Parallel port data bus bit 0. Refer to description of the parallel port for definition of this pin in ECP and EPP mode.
		IN_t	EXTENSION FDD MODE: INDEX2# This pin is for Extension FDD B; the function of this pin is the same as the INDEX# pin of FDC. It is pulled high internally.
		IN_t	EXTENSION 2FDD MODE: INDEX2# This pin is for Extension FDD A and B; the function of this pin is the same as the INDEX# pin of FDC. It is pulled high internally.
PD1	30	I/O_{24t}	PRINTER MODE: PD1 Parallel port data bus bit 1. Refer to description of the parallel port for definition of this pin in ECP and EPP mode.
		IN_t	EXTENSION FDD MODE: TRAK02# This pin is for Extension FDD B; the function of this pin is the same as the TRAK0# pin of FDC. It is pulled high internally.
		IN_t	EXTENSION. 2FDD MODE: TRAK02# This pin is for Extension FDD A and B; the function of this pin is the same as the TRAK0# pin of FDC. It is pulled high internally.
PD2	29	I/O24t	PRINTER MODE: PD2 Parallel port data bus bit 2. Refer to description of the parallel port for definition of this pin in ECP and EPP mode.
		INt	EXTENSION FDD MODE: WP2# This pin is for Extension FDD B; the function of this pin is the same as the WP# pin of FDC. It is pulled high internally.
		INt	EXTENSION. 2FDD MODE: WP2# This pin is for Extension FDD A and B; the function of this pin is the same as the WP# pin of FDC. It is pulled high internally.
PD3	28	I/O24t	PRINTER MODE: PD3 Parallel port data bus bit 3. Refer to description of the parallel port for definition of this pin in ECP and EPP mode.
		INt	EXTENSION FDD MODE: RDATA2# This pin is for Extension FDD B; the function of this pin is the same as the RDATA# pin of FDC. It is pulled high internally.
		INt	EXTENSION 2FDD MODE: RDATA2# This pin is for Extension FDD A and B; this function of this pin is the same as the RDATA# pin of FDC. It is pulled high internally.

Multi-Mode Parallel Port, continued

SYMBOL	PIN	I/O	FUNCTION
PD4	27	I/O_{24t}	PRINTER MODE: PD4 Parallel port data bus bit 4. Refer to description of the parallel port for definition of this pin in ECP and EPP mode.
		IN_t	EXTENSION FDD MODE: DSKCHG2# This pin is for Extension FDD B; the function of this pin is the same as the DSKCHG# pin of FDC. It is pulled high internally.
		IN_t	EXTENSION 2FDD MODE: DSKCHG2# This pin is for Extension FDD A and B; this function of this pin is the same as the DSKCHG# pin of FDC. It is pulled high internally.
PD5	26	I/O_{24t}	PRINTER MODE: PD5 Parallel port data bus bit 5. Refer to description of the parallel port for definition of this pin in ECP and EPP mode.
		-	EXTENSION FDD MODE: This pin is a tri-state output.
		-	EXTENSION 2FDD MODE: This pin is a tri-state output.
PD6	24	I/O_{24t}	PRINTER MODE: PD6 Parallel port data bus bit 6. Refer to description of the parallel port for definition of this pin in ECP and EPP mode.
		-	EXTENSION FDD MODE: This pin is a tri-state output.
		OD_{24}	EXTENSION. 2FDD MODE: MOA2# This pin is for Extension FDD A; its function is the same as the MOA# pin of FDC.
PD7	23	I/O_{24t}	PRINTER MODE: PD7 Parallel port data bus bit 7. Refer to description of the parallel port for definition of this pin in ECP and EPP mode.
		-	EXTENSION FDD MODE: This pin is a tri-state output.
		OD_{24}	EXTENSION 2FDD MODE: DSA2# This pin is for Extension FDD A; its function is the same as the DSA# pin of FDC.

4.6 FDC Interface

SYMBOL	PIN	I/O	FUNCTION
DRVDEN0	2	OD_{24}	Drive Density Select bit 0.
DRVDEN1	3	OD_{24}	Drive Density Select bit 1. (CR2A bit 1_0 = 00, default)
GP10		IO_{24t}	General purpose I/O port 1 bit 0. (CR2A bit 1_0 = 01)
(IRQIN1)			Alternate Function from GP10: Interrupt channel input.
P12		IO_{24t}	KBC P12 I/O port. (CR2A bit 1_0 = 10)
SCI#		OUT_{12t}	System Control Interrupt (CR2A bit 1_0 = 11)
HEAD#	5	OD_{24}	Head select. This open drain output determines which disk drive head is active. Logic 1 = side 0 Logic 0 = side 1
WE#	9	OD_{24}	Write enable. An open drain output.
WD#	10	OD_{24}	Write data. This logic low open drain writes pre-compensation serial data to the selected FDD. An open drain output.
STEP#	11	OD_{24}	Step output pulses. This active low open drain output produces a pulse to move the head to another track.
DIR#	12	OD_{24}	Direction of the head step motor. An open drain output. Logic 1 = outward motion Logic 0 = inward motion
MOB#	13	OD_{24}	Motor B On. When set to 0, this pin enables disk drive 1. This is an open drain output.
DSA#	14	OD24	Drive Select A. When set to 0, this pin enables disk drive A. This is an open drain output.
DSB#	15	OD24	Drive Select B. When set to 0, this pin enables disk drive B. This is an open drain output.
MOA#	16	OD_{24}	Motor A On. When set to 0, this pin enables disk drive 0. This is an open drain output.
DSKCHG#	4	IN_{cs}	Diskette change. This signal is active low at power on and whenever the diskette is removed. This input pin is pulled up internally by a 1 KΩ resistor. The resistor can be disabled by bit 7 of L0-CRF0 (FIPURDWN).
RDATA#	6	IN_{cs}	The read data input signal from the FDD. This input pin is pulled up internally by a 1 KΩ resistor. The resistor can be disabled by bit 7 of L0-CRF0 (FIPURDWN).
WP#	7	IN_{cs}	Write protected. This active low Schmitt input from the disk drive indicates that the diskette is write-protected. This input pin is pulled up internally by a 1 KΩ resistor. The resistor can be disabled by bit 7 of L0-CRF0 (FIPURDWN).
TRAK0#	8	IN_{cs}	Track 0. This Schmitt-triggered input from the disk drive is active low when the head is positioned over the outermost track. This input pin is pulled up internally by a 1 KΩ resistor. The resistor can be disabled by bit 7 of L0-CRF0 (FIPURDWN).
INDEX#	17	IN_{cs}	This Schmitt-triggered input from the disk drive is active low when the head is positioned over the beginning of a track marked by an index hole. This input pin is pulled up internally by a 1 KΩ resistor. The resistor can be disabled by bit 7 of L0-CRF0 (FIPURDWN).

4.7 KBC Interface

SYMBOL	PIN	I/O	FUNCTION
KDATA	59	I/O_{16u}	Keyboard Data
MDATA	60	I/O_{16u}	PS2 Mouse Data
KCLK	67	I/O_{16u}	Keyboard Clock
MCLK	68	I/O_{16u}	PS2 Mouse Clock
GA20 GP11 (IRQIN2)	56	I/O_{12t} I/O_{12t}	KBC GATE A20 (P21) Output. (CR2A bit 6 = 0, default) General purpose I/O port 1 bit 1. (CR2A bit 6 = 1) Alternate Function from GP11: Interrupt channel input.
KBRST GP12 (WDTO)	57	I/O_{12t} I/O_{12t}	W83C45 Keyboard Reset (P20) Output. (CR2A bit 7 = 0, default) General purpose I/O port 1 bit 2. (CR2A bit 7 = 1) Alternate Function 1 from GP12 : Watchdog timer output.
KBLOCK GP13	58	IN_{ts} I/O_{16t}	W83C45 KINH (P17) Input. (CR2B bit 0 = 0, default) General purpose I/O port 1 bit 3. (CR2B bit 0 = 1)

4.8 POWER PINS

SYMBOL	PIN	FUNCTION
VCC	20, 55, 85, 115	+5V power supply for the digital circuitry
VSB	71	+5V stand-by power supply for the digital circuitry
GND	25, 62, 90, 120	Ground

4.9 ACPI Interface

SYMBOL	PIN	I/O	FUNCTION
VBAT	64	NA	battery voltage input
XTAL1	63	IN_C	32.768Khz Clock Input
XTAL2	61	O_{8t}	32.768Khz Clock Output

5. FDC FUNCTIONAL DESCRIPTION

5.1 W83977EF/EG FDC

The floppy disk controller of W83977EF/EG integrates all of the logic required for floppy disk control. The FDC implements a PC/AT or PS/2 solution. All programmable options default to compatible values. The FIFO provides better system performance in multi-master systems. The digital data separator supports up to 2 M bits/sec data rate.

The FDC includes the following blocks: AT interface, Precompensation, Data Rate Selection, Digital Data Separator, FIFO, and FDC Core.

5.1.1 AT interface

The interface consists of the standard asynchronous signals:RD#, WR#, A0-A3, IRQ, DMA control, and a data bus. The address lines select between the configuration registers, the FIFO and control/status registers. This interface can be switched between PC/AT, Model 30, or PS/2 normal modes. The PS/2 register sets are a superset of the registers found in a PC/AT.

5.1.2 FIFO (Data)

The FIFO is 16 bytes in size and has programmable threshold values. All command parameter information and disk data transfers go through the FIFO. Data transfers are governed by the RQM and DIO bits in the Main Status Register.

The FIFO defaults to disabled mode after any form of reset. This maintains PC/AT hardware compatibility. The default values can be changed through the CONFIGURE command. The advantage of the FIFO is that it allows the system a larger DMA latency without causing disk errors. The following tables give several examples of the delays with a FIFO. The data are based upon the following formula:

THRESHOLD # $\times$ (1/DATA/RATE) *8 - 1.5 μS = DELAY

FIFO THRESHOLD	MAXIMUM DELAY TO SERVICING AT 500K BPS
	Data Rate
1 Byte	1 $\times$ 16 μS - 1.5 μS = 14.5 μS
2 Byte	2 $\times$ 16 μS - 1.5 μS = 30.5 μS
8 Byte	8 $\times$ 16 μS - 1.5 μS = 6.5 μS
15 Byte	15 $\times$ 16 μS - 1.5 μS = 238.5 μS
FIFO THRESHOLD	**MAXIMUM DELAY TO SERVICING AT 1M BPS**
	Data Rate
1 Byte	1 $\times$ 8 μS - 1.5 μS = 6.5 μS
2 Byte	2 $\times$ 8 μS - 1.5 μS = 14.5 μS
8 Byte	8 $\times$ 8 μS - 1.5 μS = 62.5 μS
15 Byte	15 $\times$ 8 μS - 1.5 μS = 118.5 μS

At the start of a command the FIFO is always disabled and command parameters must be sent based upon the RQM and DIO bit settings in the main status register. When the FDC enters the command execution phase, it clears the FIFO of any data to ensure that invalid data are not transferred.

An overrun and underrun will terminate the current command and the data transfer. Disk writes will complete the current sector by generating a 00 pattern and valid CRC. Reads require the host to remove the remaining data so that the result phase may be entered.

DMA transfers are enabled with the SPECIFY command and are initiated by the FDC by activating the DRQ pin during a data transfer command. The FIFO is enabled directly by asserting DACK# and addresses need not be valid.

Note that if the DMA controller is programmed to function in verify mode a pseudo read is performed by the FDC based only onDACK#. This mode is only available when the FDC has been configured into byte mode (FIFO disabled) and is programmed to do a read. With the FIFO enabled the above operation is performed by using the new VERIFY command. No DMA operation is needed.

5.1.3 Data Separator

The function of the data separator is to lock onto the incoming serial read data. When a lock is achieved the serial front end logic of the chip is provided with a clock which is synchronized to the read data. The synchronized clock, called the Data Window, is used to internally sample the serial data portion of the bit cell, and the alternate state samples the clock portion. Serial to parallel conversion logic separates the read data into clock and data bytes.

The Digital Data Separator (DDS) has three parts: control logic, error adjustment, and speed tracking. The DDS circuit cycles once every 12 clock cycles ideally. Any data pulse input will be synchronized and then adjusted by immediate error adjustment. The control logic will generate RDD and RWD for every pulse input. During any cycle where no data pulse is present, the DDS cycles are based on speed. A digital integrator is used to keep track of the speed changes in the input data stream.

5.1.4 Write Precompensation

The write precompensation logic is used to minimize bit shifts in the RDDATA stream from the disk drive. Shifting of bits is a known phenomenon in magnetic media and is dependent on the disk media and the floppy drive.

The FDC monitors the bit stream that is being sent to the drive. The data patterns that require precompensation are well known. Depending upon the pattern, the bit is shifted either early or late relative to the surrounding bits.

5.1.5 Perpendicular Recording Mode

The FDC is also capable of interfacing directly to perpendicular recording floppy drives. Perpendicular recording differs from the traditional longitudinal method in that the magnetic bits are oriented vertically. This scheme packs more data bits into the same area.

FDCs with perpendicular recording drives can read standard 3.5" floppy disks and can read and write perpendicular media. Some manufacturers offer drives that can read and write standard and perpendicular media in a perpendicular media drive.

A single command puts the FDC into perpendicular mode. All other commands operate as they normally do. The perpendicular mode requires a 1 Mbps data rate for the FDC. At this data rate the FIFO eases the host interface bottleneck due to the speed of data transfer to or from the disk.

5.1.6 FDC Core

The W83977EF/EG FDC is capable of performing twenty commands. Each command is initiated by a multi-byte transfer from the microprocessor. The result can also be a multi-byte transfer back to the microprocessor. Each command consists of three phases: command, execution, and result.

Command

The microprocessor issues all required information to the controller to perform a specific operation.

Execution

The controller performs the specified operation.

Result

After the operation is completed, status information and other housekeeping information is provided to the microprocessor.

5.1.7 FDC Commands

Command Symbol Descriptions:

C:	Cylinder number 0 - 256
D:	Data Pattern
DIR:	Step Direction
	DIR = 0, step out
	DIR = 1, step in
DS0:	Disk Drive Select 0
DS1:	Disk Drive Select 1
DTL:	Data Length
EC:	Enable Count
EOT:	End of Track
EFIFO:	Enable FIFO
EIS:	Enable Implied Seek
EOT:	End of track
FIFOTHR:	FIFO Threshold
GAP:	Gap length selection
GPL:	Gap Length
H:	Head number
HDS:	Head number select
HLT:	Head Load Time
HUT:	Head Unload Time
LOCK:	Lock EFIFO, FIFOTHR, PTRTRK bits prevent affected by software reset
MFM:	MFM or FM Mode
MT:	Multitrack
N:	The number of data bytes written in a sector

NCN:	New Cylinder Number
ND:	Non-DMA Mode
OW:	Overwritten
PCN:	Present Cylinder Number
POLL:	Polling Disable
PRETRK:	Precompensation Start Track Number
R:	Record
RCN:	Relative Cylinder Number
R/W:	Read/Write
SC:	Sector/per cylinder
SK:	Skip deleted data address mark
SRT:	Step Rate Time
ST0:	Status Register 0
ST1:	Status Register 1
ST2:	Status Register 2
ST3:	Status Register 3
WG:	Write gate alters timing of WE

(1) Read Data

PHASE	R/W	D7	D6	D5	D4	D3	D2	D1	D0	REMARKS
Command	W	MT	MFM	SK	0	0	1	1	0	Command codes
	W	0	0	0	0	0	HDS	DS1	DS0	
	W	---------- C ----------								Sector ID information prior to command execution
	W	---------- H ----------								
	W	---------- R ----------								
	W	---------- N ----------								
	W	---------- EOT ----------								
	W	---------- GPL ----------								
	W	---------- DTL ----------								
Execution										Data transfer between the FDD and system
Result	R	---------- ST0 ----------								Status information after command execution
	R	---------- ST1 ----------								
	R	---------- ST2 ----------								
	R	---------- C ----------								Sector ID information after command execution
	R	---------- H ----------								
	R	---------- R ----------								
	R	---------- N ----------								

(2) Read Deleted Data

PHASE	R/W	D7	D6	D5	D4	D3	D2	D1	D0	REMARKS
Command	W	MT	MFM	SK	0	1	1	0	0	Command codes
	W	0	0	0	0	0	HDS	DS1	DS0	
	W	---------- C ----------								Sector ID information prior to command execution
	W	---------- H ----------								
	W	---------- R ----------								
	W	---------- N ----------								
	W	---------- EOT ----------								
	W	---------- GPL ----------								
	W	---------- DTL ----------								
Execution										Data transfer between the FDD and system
Result	R	---------- ST0 ----------								Status information after command execution
	R	---------- ST1 ----------								
	R	---------- ST2 ----------								
	R	---------- C ----------								Sector ID information after command execution
	R	---------- H ----------								
	R	---------- R ----------								
	R	---------- N ----------								

(3) Read A Track

PHASE	R/W	D7	D6	D5	D4	D3	D2	D1	D0	REMARKS
Command	W	0	MFM	0	0	0	0	1	0	Command codes
	W	0	0	0	0	0	HDS	DS1	DS0	
	W	---------- C ----------								Sector ID information prior to command execution
	W	---------- H ----------								
	W	---------- R ----------								
	W	---------- N ----------								
	W	---------- EOT ----------								
	W	---------- GPL ----------								
	W	---------- DTL ----------								
Execution										Data transfer between the FDD and system; FDD reads contents of all cylinders from index hole to EOT
Result	R	---------- ST0 ----------								Status information after command execution
	R	---------- ST1 ----------								
	R	---------- ST2 ----------								
	R	---------- C ----------								Sector ID information after command execution
	R	---------- H ----------								
	R	---------- R ----------								
	R	---------- N ----------								

(4) Read ID

PHASE	R/W	D7	D6	D5	D4	D3	D2	D1	D0	REMARKS
Command	W	0	MFM	0	0	1	0	1	0	Command codes
	W	0	0	0	0	0	HDS	DS1	DS0	
Execution										The first correct ID information on the cylinder is stored in Data Register
Result	R	ST0								Status information after command execution
	R	ST1								
	R	ST2								
	R	C								Disk status after the command has been completed
	R	H								
	R	R								
	R	N								

(5) Verify

PHASE	R/W	D7	D6	D5	D4	D3	D2	D1	D0	REMARKS
Command	W	MT	MFM	SK	1	0	1	1	0	Command codes
	W	EC	0	0	0	0	HDS	DS1	DS0	
	W	C								Sector ID information prior to command execution
	W	H								
	W	R								
	W	N								
	W	EOT								
	W	GPL								
		DTL/SC								
Execution										No data transfer takes place
Result	R	ST0								Status information after command execution
	R	ST1								
	R	ST2								
	R	C								Sector ID information after command execution
	R	H								
	R	R								
	R	N								

(6) Version

PHASE	R/W	D7	D6	D5	D4	D3	D2	D1	D0	REMARKS
Command	W	0	0	0	1	0	0	0	0	Command code
Result	R	1	0	0	1	0	0	0	0	Enhanced controller

(7) Write Data

PHASE	R/W	D7	D6	D5	D4	D3	D2	D1	D0	REMARKS
Command	W	MT	MFM	0	0	0	1	0	1	Command codes
	W	0	0	0	0	0	HDS	DS1	DS0	
	W	---------- C ----------								Sector ID information prior to Command execution
	W	---------- H ----------								
	W	---------- R ----------								
	W	---------- N ----------								
	W	---------- EOT ----------								
	W	---------- GPL ----------								
	W	---------- DTL ----------								
Execution										Data transfer between the FDD and system
Result	R	---------- ST0 ----------								Status information after Command execution
	R	---------- ST1 ----------								
	R	---------- ST2 ----------								
	R	---------- C ----------								Sector ID information after Command execution
	R	---------- H ----------								
	R	---------- R ----------								
	R	---------- N ----------								

(8) Write Deleted Data

PHASE	R/W	D7	D6	D5	D4	D3	D2	D1	D0	REMARKS
Command	W	MT	MFM	0	0	1	0	0	1	Command codes
	W	0	0	0	0	0	HDS	DS1	DS0	
	W	---------- C ----------								Sector ID information prior to command execution
	W	---------- H ----------								
	W	---------- R ----------								
	W	---------- N ----------								
	W	---------- EOT ----------								
	W	---------- GPL ----------								
	W	---------- DTL ----------								
Execution										Data transfer between the FDD and system
Result	R	---------- ST0 ----------								Status information after command execution
	R	---------- ST1 ----------								
	R	---------- ST2 ----------								
	R	---------- C ----------								Sector ID information after command execution
	R	---------- H ----------								
	R	---------- R ----------								
	R	---------- N ----------								

(9) Format A Track

PHASE	R/W	D7	D6	D5	D4	D3	D2	D1	D0	REMARKS
Command	W	0	MFM	0	0	1	1	0	1	Command codes
	W	0	0	0	0	0	HDS	DS1	DS0	
	W	---------- N ----------								Bytes/Sector
	W	---------- SC ----------								Sectors/Cylinder
	W	---------- GPL ----------								Gap 3
	W	---------- D ----------								Filler Byte
Execution for Each Sector Repeat:	W	---------- C ----------								Input Sector Parameters
	W	---------- H ----------								
	W	---------- R ----------								
	W	---------- N ----------								
Result	R	---------- ST0 ----------								Status information after command execution
	R	---------- ST1 ----------								
	R	---------- ST2 ----------								
	R	---------- Undefined ----------								
	R	---------- Undefined ----------								
	R	---------- Undefined ----------								
	R	---------- Undefined ----------								

(10) Recalibrate

PHASE	R/W	D7	D6	D5	D4	D3	D2	D1	D0	REMARKS
Command	W	0	0	0	0	0	1	1	1	Command codes
	W	0	0	0	0	0	0	DS1	DS0	
Execution										Head retracted to Track 0 Interrupt

(11) Sense Interrupt Status

PHASE	R/W	D7	D6	D5	D4	D3	D2	D1	D0	REMARKS
Command	W	0	0	0	0	1	0	0	0	Command code
Result	R	---------- ST0 ----------								Status information at the end of each seek operation
	R	---------- PCN ----------								

(12) Specify

PHASE	R/W	D7	D6	D5	D4	D3	D2	D1	D0	REMARKS
Command	W	0	0	0	0	0	0	1	1	Command codes
	W	| ---------SRT ---------- | --------- HUT ---------- |								
	W	|---------- HLT ----------| ND								

(13) Seek

PHASE	R/W	D7	D6	D5	D4	D3	D2	D1	D0	REMARKS
Command	W	0	0	0	0	1	1	1	1	Command codes
	W	0	0	0	0	0	HDS	DS1	DS0	
	W	---------- NCN ----------								
Execution	R									Head positioned over proper cylinder on diskette

(14) Configure

PHASE	R/W	D7	D6	D5	D4	D3	D2	D1	D0	REMARKS
Command	W	0	0	0	1	0	0	1	1	Configure information
	W	0	0	0	0	0	0	0	0	
	W	0	EIS	EFIFO	POLL | ------ FIFOTHR ----|					
	W	| ----------PRETRK ---------- |								
Execution										Internal registers written

(15) Relative Seek

PHASE	R/W	D7	D6	D5	D4	D3	D2	D1	D0	REMARKS
Command	W	1	DIR	0	0	1	1	1	1	Command codes
	W	0	0	0	0	0	HDS	DS1	DS0	
	W	| ---------- RCN ---------- |								

(16) Dumpreg

PHASE	R/W	D7	D6	D5	D4	D3	D2	D1	D0	REMARKS
Command	W	0	0	0	0	1	1	1	0	Registers placed in FIFO
Result	R	---------- PCN-Drive 0----------								
	R	---------- PCN-Drive 1 ----------								
	R	---------- PCN-Drive 2----------								
	R	---------- PCN-Drive 3 ----------								
	R	--------SRT ---------- | --------- HUT --------								
	R	---------- HLT ----------| ND								
	R	---------- SC/EOT ----------								
	R	LOCK	0	D3	D2	D1	D0	GAP	WG	
	R	0	EIS	EFIFO	POLL | ------ FIFOTHR --------					
	R	----------PRETRK ----------								

(17) Perpendicular Mode

PHASE	R/W	D7	D6	D5	D4	D3	D2	D1	D0	REMARKS
Command	W	0	0	0	1	0	0	1	0	Command Code
	W	OW	0	D3	D2	D1	D0	GAP	WG	

(18) Lock

PHASE	R/W	D7	D6	D5	D4	D3	D2	D1	D0	REMARKS
Command	W	LOCK	0	0	1	0	1	0	0	Command Code
Result	R	0	0	0	LOCK	0	0	0	0	

(19) Sense Drive Status

PHASE	R/W	D7	D6	D5	D4	D3	D2	D1	D0	REMARKS
Command	W	0	0	0	0	0	1	0	0	Command Code
	W	0	0	0	0	0	HDS	DS1	DS0	
Result	R	---------- ST3 ----------								Status information about disk drive

(20) Invalid

PHASE	R/W	D7 D6 D5 D4 D3 D2 D1 D0	REMARKS
Command	W	---------- Invalid Codes ----------	Invalid codes (no operation-FDC goes to standby state)
Result	R	---------- ST0 ----------	ST0 = 80H

5.2 Register Descriptions

There are several status, data, and control registers in W83977EF. These registers are defined below:

ADDRESS OFFSET	REGISTER	
	READ	WRITE
base address + 0	SA REGISTER	
base address + 1	SB REGISTER	
base address + 2		DO REGISTER
base address + 3	TD REGISTER	TD REGISTER
base address + 4	MS REGISTER	DR REGISTER
base address + 5	DT (FIFO) REGISTER	DT (FIFO) REGISTER
base address + 7	DI REGISTER	CC REGISTER

5.2.1 Status Register A (SA Register) (Read base address + 0)

This register is used to monitor several disk interface pins in PS/2 and Model 30 modes. In PS/2 mode, the bit definitions for this register are as follows:

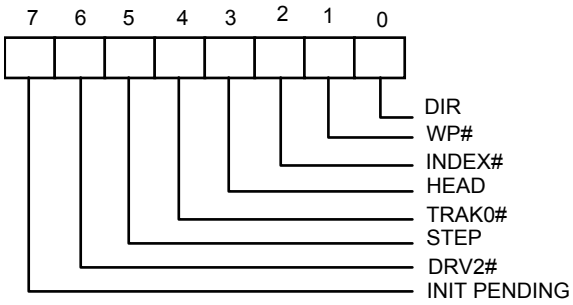

INIT PENDING (Bit 7):

This bit indicates the value of the floppy disk interrupt output.

DRV2# (Bit 6):

0 A second drive has been installed

1 A second drive has not been installed

STEP (Bit 5):

This bit indicates the complement of STEP# output.

TRAK0#(Bit 4):
This bit indicates the value of TRAK0# input.

HEAD (Bit 3):
This bit indicates the complement of HEAD# output.
0 side 0
1 side 1

INDEX#(Bit 2):
This bit indicates the value of INDEX# output.

WP#(Bit 1):
0 disk is write-protected
1 disk is not write-protected

DIR (Bit 0)
This bit indicates the direction of head movement.
0 outward direction
1 inward direction

In PS/2 Model 30 mode, the bit definitions for this register are as follows:

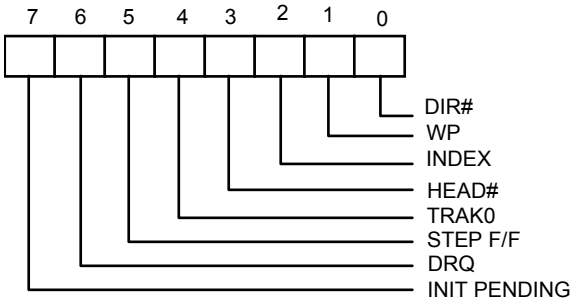

INIT PENDING (Bit 7):
This bit indicates the value of the floppy disk interrupt output.

DRQ (Bit 6):
This bit indicates the value of DRQ output pin.
STEP F/F (Bit 5):
This bit indicates the complement of latched STEP# output.

TRAK0 (Bit 4):
This bit indicates the complement of TRAK0# input.

HEAD# (Bit 3):
This bit indicates the value of HEAD# output.
0 side 1
1 side 0

INDEX (Bit 2):
This bit indicates the complement of INDEX# output.

WP (Bit 1):
0 disk is not write-protected
1 disk is write-protected

DIR#(Bit 0)
This bit indicates the direction of head movement.
0 inward direction
1 outward direction

5.2.2 Status Register B (SB Register) (Read base address + 1)

This register is used to monitor several disk interface pins in PS/2 and Model 30 modes. In PS/2 mode, the bit definitions for this register are as follows:

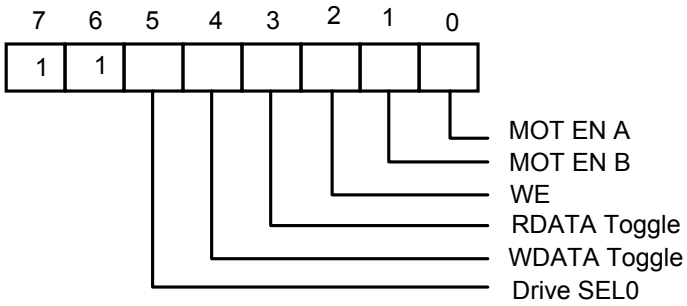

Drive SEL0 (Bit 5):
This bit indicates the status of DO REGISTER bit 0 (drive select bit 0).

WDATA Toggle (Bit 4):
This bit changes state at every rising edge of the WD# output pin.

RDATA Toggle (Bit 3):
This bit changes state at every rising edge of the RDATA# output pin.

WE (Bit 2):
This bit indicates the complement of the WE# output pin.

MOT EN B (Bit 1)
This bit indicates the complement of the MOB# output pin.

MOT EN A (Bit 0)
This bit indicates the complement of the MOA# output pin.
In PS/2 Model 30 mode, the bit definitions for this register are as follows:

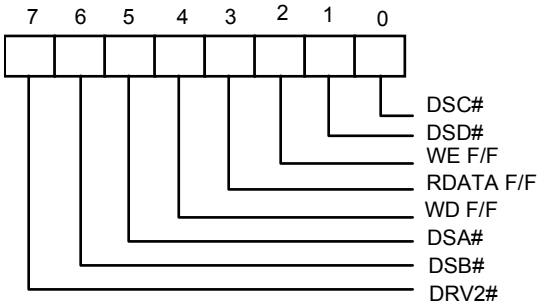

DRV2# (Bit 7):

0 A second drive has been installed

1 A second drive has not been installed

DSB# (Bit 6):

This bit indicates the status of DSB# output pin.

DSA# (Bit 5):

This bit indicates the status of DSA# output pin.

WD F/F(Bit 4):

This bit indicates the complement of the latched WD# output pin at every rising edge of the WD# output pin.

RDATA F/F(Bit 3):

This bit indicates the complement of the latched RDATA# output pin .

WE F/F (Bit 2):

This bit indicates the complement of latched WE# output pin.

DSD# (Bit 1):

0 Drive D has been selected

1 Drive D has not been selected

DSC# (Bit 0):

0 Drive C has been selected

1 Drive C has not been selected

5.2.3 Digital Output Register (DO Register) (Write base address + 2)

The Digital Output Register is a write-only register controlling drive motors, drive selection, DRQ/IRQ enable, and FDC resetting. All the bits in this register are cleared by the MR pin. The bit definitions are as follows:

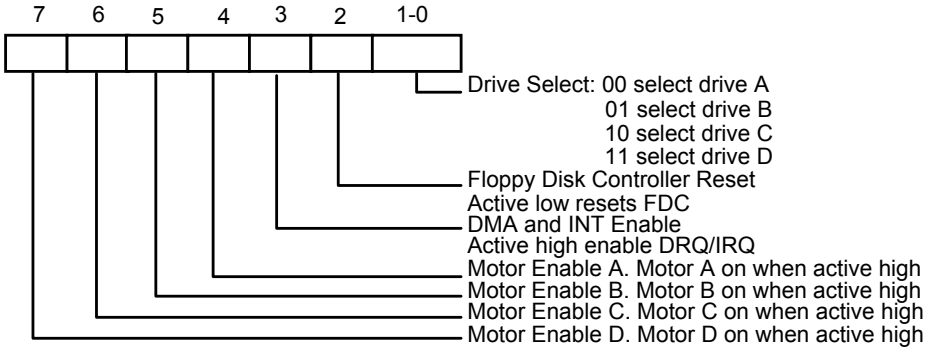

5.2.4 Tape Drive Register (TD Register) (Read base address + 3)

This register is used to assign a particular drive number to the tape drive support mode of the data separator. This register also holds the media ID, drive type, and floppy boot drive information of the floppy disk drive. In normal floppy mode, this register includes only bit 0 and 1. The bit definitions are as follows:

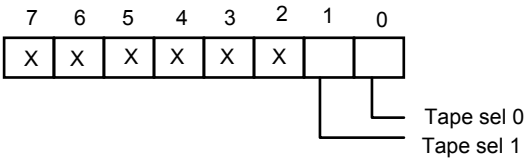

If three mode FDD function is enabled (EN3MODE = 1 in CR9), the bit definitions are as follows:

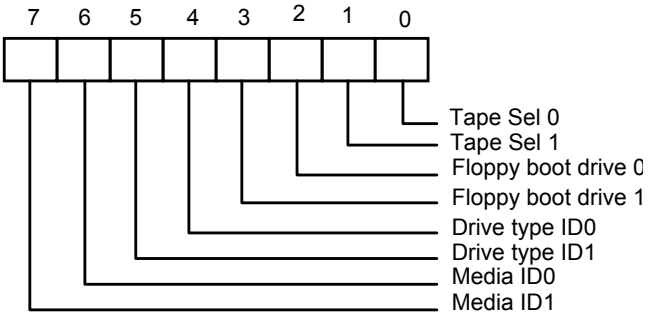

Media ID1 Media ID0 (Bit 7, 6):

These two bits are read only. These two bits reflect the value of CR8 bit 3, 2.

Drive type ID1 Drive type ID0 (Bit 5, 4):

These two bits reflect two of the bits of CR7. Which two bits are reflected depends on the last drive selected in the DO REGISTER.

Floppy Boot drive 1, 0 (Bit 3, 2):

These two bits reflect the value of CR8 bit 1, 0.

Tape Sel 1, Tape Sel 0 (Bit 1, 0):

These two bits assign a logical drive number to the tape drive. Drive 0 is not available as a tape drive and is reserved as the floppy disk boot drive.

TAPE SEL 1	TAPE SEL 0	DRIVE SELECTED
0	0	None
0	1	1
1	0	2
1	1	3

5.2.5 Main Status Register (MS Register) (Read base address + 4)

The Main Status Register is used to control the flow of data between the microprocessor and the controller. The bit definitions for this register are as follows:

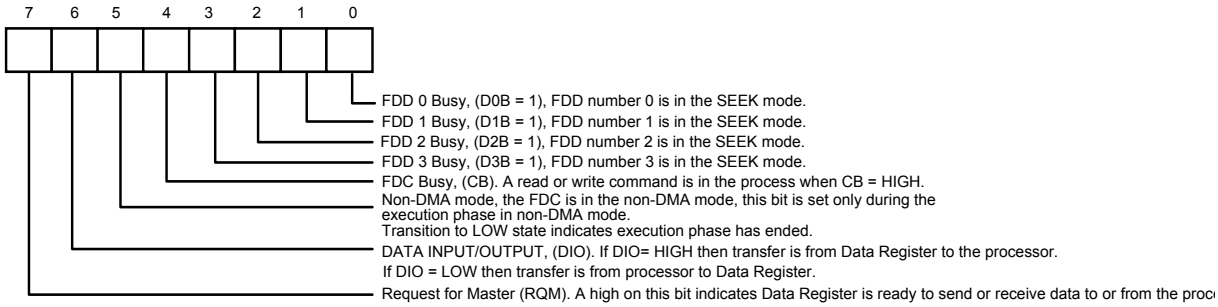

5.2.6 Data Rate Register (DR Register) (Write base address + 4)

The Data Rate Register is used to set the transfer rate and write precompensation. The data rate of the FDC is programmed by the CC REGISTER for PC-AT and PS/2 Model 30 and PS/2 mode, and not by the DR REGISTER. The real data rate is determined by the most recent write to either of the DR REGISTER or CC REGISTER.

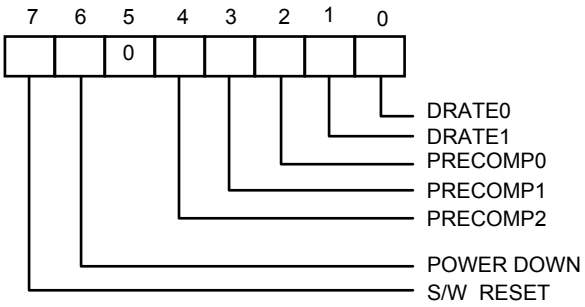

S/W RESET (Bit 7):
This bit is the software reset bit.

POWER-DOWN (Bit 6):
0 FDC in normal mode
1 FDC in power-down mode

PRECOMP2 PRECOMP1 PRECOMP0 (Bit 4, 3, 2):
These three bits select the value of write precompensation. The following tables show the precompensation values for the combination of these bits.

PRECOMP	PRECOMPENSATION DELAY	
2 1 0	250K - 1 Mbps	2 Mbps Tape drive
0 0 0	Default Delays	Default Delays
0 0 1	41.67 nS	20.8 nS
0 1 0	83.34 nS	41.17 nS
0 1 1	125.00 nS	62.5nS
1 0 0	166.67 nS	83.3 nS
1 0 1	208.33 nS	104.2 nS
1 1 0	250.00 nS	125.00 nS
1 1 1	0.00 nS (disabled)	0.00 nS (disabled)

DATA RATE	DEFAULT PRECOMPENSATION DELAYS
250 KB/S	125 nS
300 KB/S	125 nS
500 KB/S	125 nS
1 MB/S	41.67nS
2 MB/S	20.8 nS

DRATE1 DRATE0 (Bit 1, 0):

These two bits select the data rate of the FDC and reduced write current control.

00 500 KB/S (MFM), 250 KB/S (FM), RWC#= 1
01 300 KB/S (MFM), 150 KB/S (FM), RWC#= 0
10 250 KB/S (MFM), 125 KB/S (FM), RWC#= 0
11 1 MB/S (MFM), Illegal (FM), RWC#= 1

The 2 MB/S data rate for Tape drive is only supported by setting 01 to DRATE1 and DRATE0 bits, as well as setting 10 to DRT1 and DRT0 bits which are two of the Configure Register CRF4 or CRF5 bits in logic device 0. Please refer to the function description of CRF4 or CRF5 and data rate table for individual data rates setting.

5.2.7 FIFO Register (R/W base address + 5)

The Data Register consists of four status registers in a stack with only one register presented to the data bus at a time. This register stores data, commands, and parameters and provides diskette-drive status information. Data bytes are passed through the data register to program or obtain results after a command. In the W83977EF/EG, this register defaults to FIFO disabled mode after reset. The FIFO can change its value and enable its operation through the CONFIGURE command.

Status Register 0 (ST0)

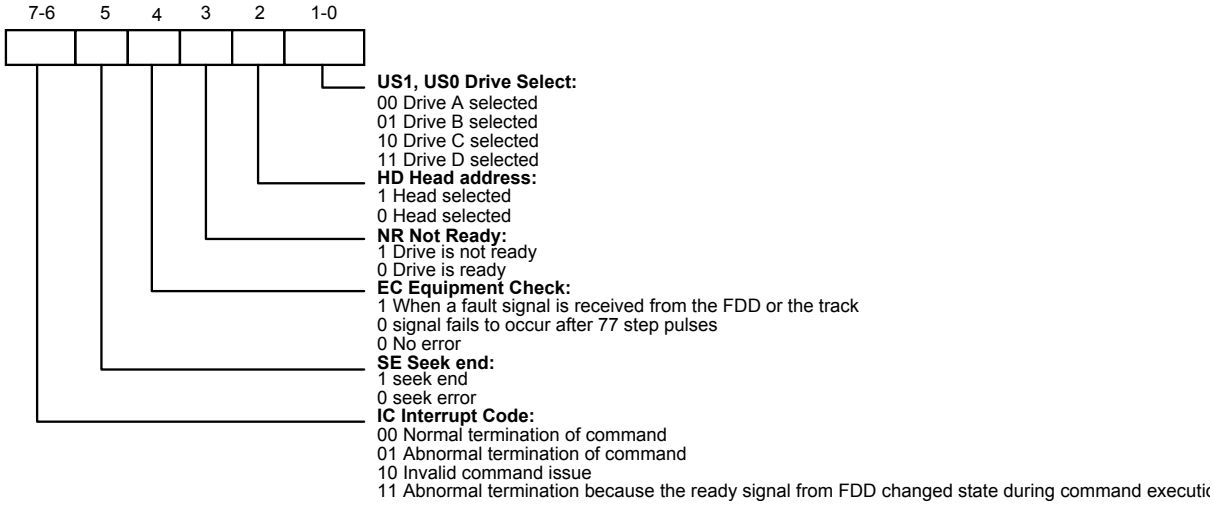

Status Register 1 (ST1)

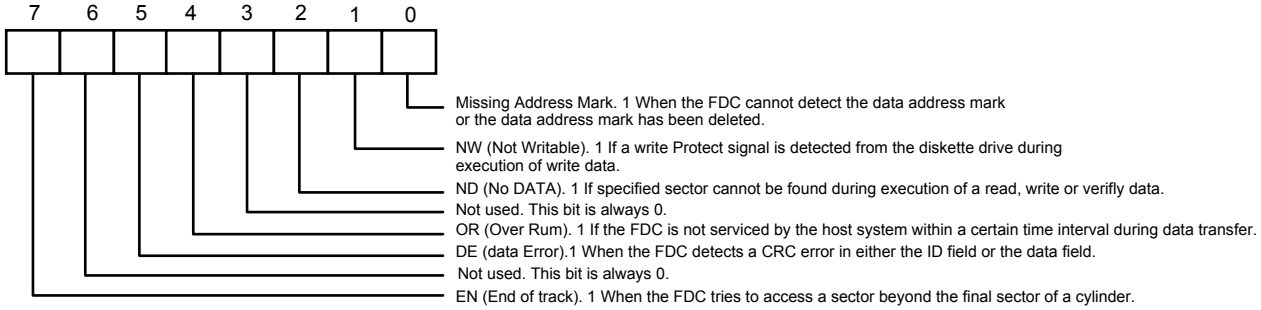

Status Register 2 (ST2)

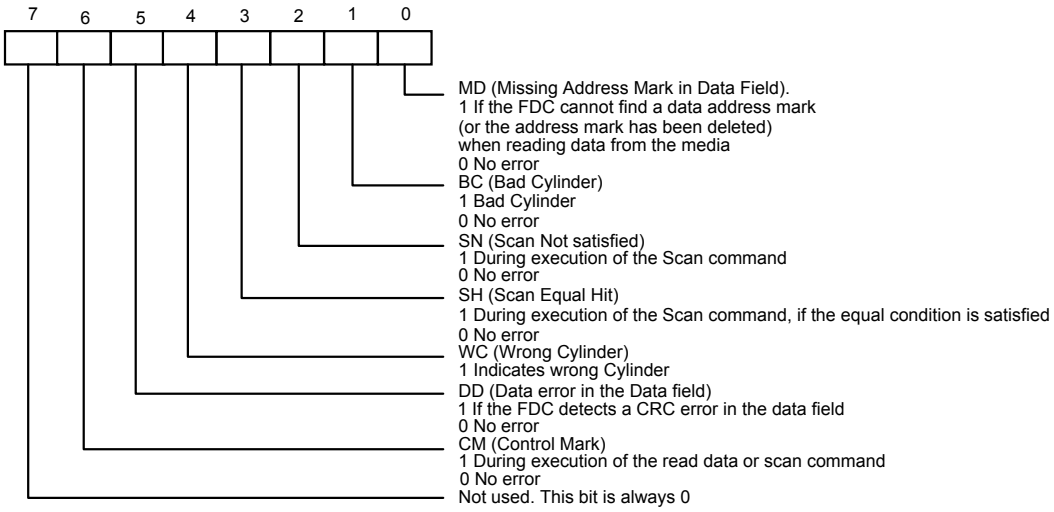

Status Register 3 (ST3)

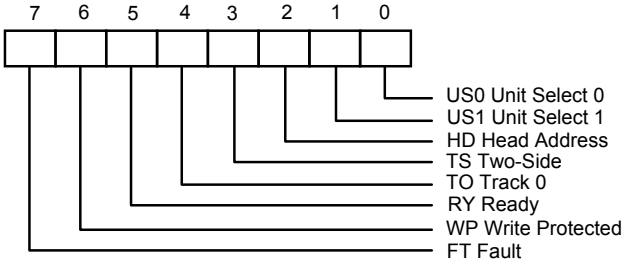

5.2.8 Digital Input Register (DI Register) (Read base address + 7)

The Digital Input Register is an 8-bit read-only register used for diagnostic purposes. In a PC/XT or AT only Bit 7 is checked by the BIOS. When the register is read, Bit 7 shows the complement ofDSKCHG#, while other bits of the data bus remain in tri-state. Bit definitions are as follows:

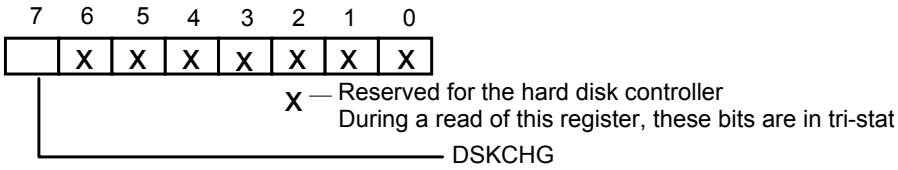

In the PS/2 mode, the bit definitions are as follows:

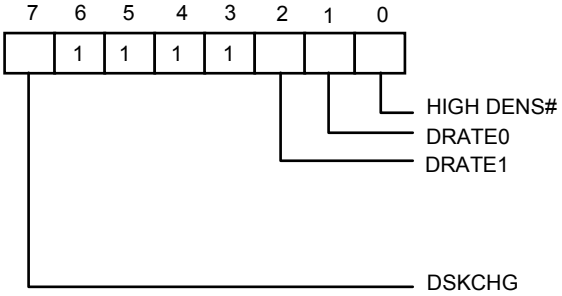

DSKCHG (Bit 7):
This bit indicates the complement of the DSKCHG# input.

Bit 6-3: These bits are always a logic 1 during a read.

DRATE1 DRATE0 (Bit 2, 1):

These two bits select the data rate of the FDC. Refer to the DR register bits 1 and 0 for the settings corresponding to the individual data rates.

HIGHDENS#(Bit 0):

0 500 KB/S or 1 MB/S data rate (high density FDD)

1 250 KB/S or 300 KB/S data rate

In the PS/2 Model 30 mode, the bit definitions are as follows:

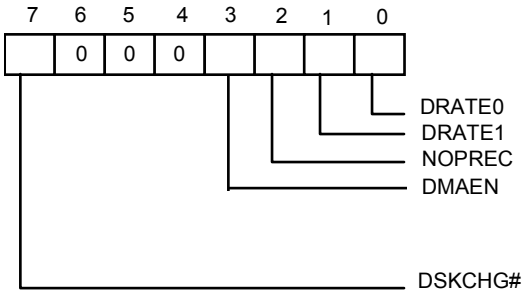

DSKCHG (Bit 7):

This bit indicates the status of DSKCHG# input.

Bit 6-4: These bits are always a logic 1 during a read.

DMAEN (Bit 3):

This bit indicates the value of DO REGISTER bit 3.

NOPREC (Bit 2):

This bit indicates the value of CC REGISTER NOPREC bit.

DRATE1 DRATE0 (Bit 1, 0):

These two bits select the data rate of the FDC.

5.2.9 Configuration Control Register (CC Register) (Write base address + 7)

This register is used to control the data rate. In the PC/AT and PS/2 mode, the bit definitions are as follows:

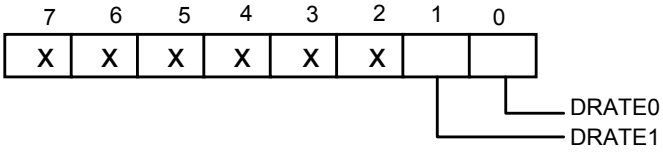

X: Reserved

Bit 7-2: Reserved. These bits should be set to 0.

DRATE1 DRATE0 (Bit 1, 0):
These two bits select the data rate of the FDC.
In the PS/2 Model 30 mode, the bit definitions are as follows:

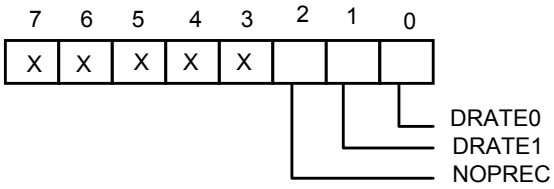

X: Reserved

Bit 7-3: Reserved. These bits should be set to 0.

NOPREC (Bit 2):
This bit indicates no precompensation. It has no function and can be set by software.

DRATE1 DRATE0 (Bit 1, 0):
These two bits select the data rate of the FDC.

6. UART PORT

6.1 Universal Asynchronous Receiver/Transmitter (UART A, UART B)

The UARTs are used to convert parallel data into serial format on the transmit side and convert serial data to parallel format on the receiver side. The serial format, in order of transmission and reception, is a start bit, followed by five to eight data bits, a parity bit (if programmed) and one, one and half (five-bit format only) or two stop bits. The UARTs are capable of handling divisors of 1 to 65535 and producing a 16x clock for driving the internal transmitter logic. Provisions are also included to use this 16x clock to drive the receiver logic. The UARTs also support the MIDI data rate. Furthermore, the UARTs also include complete modem control capability and a processor interrupt system that may be software trailed to the computing time required to handle the communication link. The UARTs have a FIFO mode to reduce the number of interrupts presented to the CPU. In each UART, there are 16-byte FIFOs for both receive and transmit mode.

6.2 Register Address

6.2.1 UART Control Register (UCR) (Read/Write)

The UART Control Register controls and defines the protocol for asynchronous data communications, including data length, stop bit, parity, and baud rate selection.

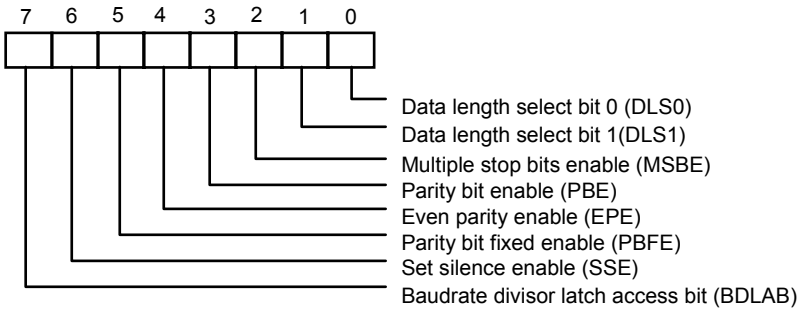

Bit 7: BDLAB. When this bit is set to a logical 1, designers can access the divisor (in 16-bit binary format) from the divisor latches of the baudrate generator during a read or write operation. When this bit is reset, the Receiver Buffer Register, the Transmitter Buffer Register, or the Interrupt Control Register can be accessed.

Bit 6: SSE. A logical 1 forces the Serial Output (SOUT) to a silent state (a logical 0). Only IRTX is affected by this bit; the transmitter is not affected.

Bit 5: PBFE. When PBE and PBFE of UCR are both set to a logical 1,

(1) if EPE is logical 1, the parity bit is fixed as logical 0 to transmit and check.

(2) if EPE is logical 0, the parity bit is fixed as logical 1 to transmit and check.

TABLE 6-1 UART Register Bit Map

BIT NUMBER										
REGISTER ADDRESS BASE			0	1	2	3	4	5	6	7
+ 0 BDLAB = 0	Receiver Buffer Register (Read Only)	RBR	RX Data Bit 0	RX Data Bit 1	RX Data Bit 2	RX Data Bit 3	RX Data Bit 4	RX Data Bit 5	RX Data Bit 6	RX Data Bit 7
+ 0 BDLAB = 0	Transmitter Buffer Register (Write Only)	TBR	TX Data Bit 0	TX Data Bit 1	TX Data Bit 2	TX Data Bit 3	TX Data Bit 4	TX Data Bit 5	TX Data Bit 6	TX Data Bit 7
+ 1 BDLAB = 0	Interrupt Control Register	ICR	RBR Data Ready Interrupt Enable (ERDRI)	TBR Empty Interrupt Enable (ETBREI)	USR Interrupt Enable (EUSRI)	HSR Interrupt Enable (EHSRI)	0	0	0	0
+ 2	Interrupt Status Register (Read Only)	ISR	"0" if Interrupt Pending	Interrupt Status Bit (0)	Interrupt Status Bit (1)	Interrupt Status Bit (2)**	0	0	FIFOs Enabled **	FIFOs Enabled **
+ 2	UART FIFO Control Register (Write Only)	UFR	FIFO Enable	RCVR FIFO Reset	XMIT FIFO Reset	DMA Mode Select	Reserved	Reversed	RX Interrupt Active Level (LSB)	RX Interrupt Active Level (MSB)
+ 3	UART Control Register	UCR	Data Length Select Bit 0 (DLS0)	Data Length Select Bit 1 (DLS1)	Multiple Stop Bits Enable (MSBE)	Parity Bit Enable (PBE)	Even Parity Enable (EPE)	Parity Bit Fixed Enable PBFE)	Set Silence Enable (SSE)	Baudrate Divisor Latch Access Bit (BDLAB)
+ 4	Handshake Control Register	HCR	Data Terminal Ready (DTR)	Request to Send (RTS)	Loopback RI Input	IRQ Enable	Internal Loopback Enable	0	0	0
+ 5	UART Status Register	USR	RBR Data Ready (RDR)	Overrun Error (OER)	Parity Bit Error (PBER)	No Stop Bit Error (NSER)	Silent Byte Detected (SBD)	TBR Empty (TBRE)	TSR Empty (TSRE)	RX FIFO Error Indication (RFEI) **
+ 6	Handshake Status Register	HSR	CTS Toggling (TCTS)	DSR Toggling (TDSR)	RI Falling Edge (FERI)	DCD Toggling (TDCD)	Clear to Send (CTS)	Data Set Ready (DSR)	Ring Indicator (RI)	Data Carrier Detect (DCD)
+ 7	User Defined Register	UDR	Bit 0	Bit 1	Bit 2	Bit 3	Bit 4	Bit 5	Bit 6	Bit 7
+ 0 BDLAB = 1	Baudrate Divisor Latch Low	BLL	Bit 0	Bit 1	Bit 2	Bit 3	Bit 4	Bit 5	Bit 6	Bit 7
+ 1 BDLAB = 1	Baudrate Divisor Latch High	BHL	Bit 8	Bit 9	Bit 10	Bit 11	Bit 12	Bit 13	Bit 14	Bit 15

*: Bit 0 is the least significant bit. The least significant bit is the first bit serially transmitted or received.
**: These bits are always 0 in 16450 Mode.

Bit 4: EPE. This bit describes the number of logic 1's in the data word bits and parity bit only when bit 3 is programmed. When this bit is set, an even number of logic 1's are sent or checked. When the bit is reset, an odd number of logic 1's are sent or checked.

Bit 3: PBE. When this bit is set, the position between the last data bit and the stop bit of the SOUT will be stuffed with the parity bit at the transmitter. For the receiver, the parity bit in the same position as the transmitter will be detected.

Bit 2: MSBE. This bit defines the number of stop bits in each serial character that is transmitted or received.

(1) If MSBE is set to a logical 0, one stop bit is sent and checked.

(2) If MSBE is set to a logical 1, and data length is 5 bits, one and a half stop bits are sent and checked.

(3) If MSBE is set to a logical 1, and data length is 6, 7, or 8 bits, two stop bits are sent and checked.

Bits 0 and 1: DLS0, DLS1. These two bits define the number of data bits that are sent or checked in each serial character.

TABLE 6-2 WORD LENGTH DEFINITION

DLS1	DLS0	DATA LENGTH
0	0	5 bits
0	1	6 bits
1	0	7 bits
1	1	8 bits

6.2.2 UART Status Register (USR) (Read/Write)

This 8-bit register provides information about the status of the data transfer during communication.

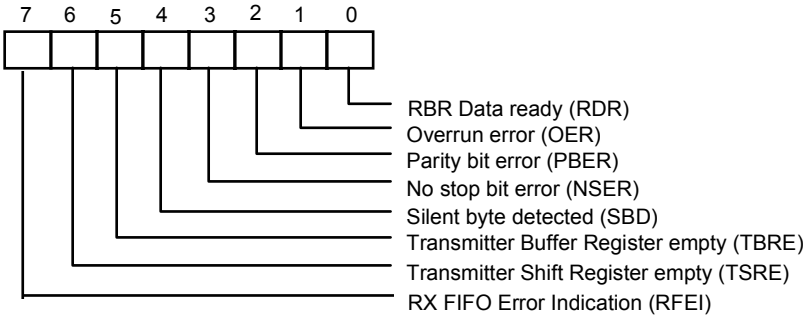

Bit 7: RFEI. In 16450 mode, this bit is always set to a logic 0. In 16550 mode, this bit is set to a logic 1 when there is at least one parity bit error, no stop bit error or silent byte detected in the FIFO. In 16550 mode, this bit is cleared by reading from the USR if there are no remaining errors left in the FIFO.

Bit 6: TSRE. In 16450 mode, when TBR and TSR are both empty, this bit will be set to a logical 1. In 16550 mode, if the transmit FIFO and TSR are both empty, it will be set to a logical 1. Other thanthese two cases, this bit will be reset to a logical 0.

Bit 5: TBRE. In 16450 mode, when a data character is transferred from TBR to TSR, this bit will be set to a logical 1. If ETREI of ICR is a logical 1, an interrupt will be generated to notify the CPU to write the next data. In 16550 mode, this bit will be set to a logical 1 when the transmit FIFO is empty. It will be reset to a logical 0 when the CPU writes data into TBR or FIFO.

Bit 4: SBD. This bit is set to a logical 1 to indicate that received data are kept in silent state for a full word time, including start bit, data bits, parity bit, and stop bits. In 16550 mode, it indicates the same condition for the data on top of the FIFO. When the CPU reads USR, it will clear this bit to a logical 0.

Bit 3: NSER. This bit is set to a logical 1 to indicate that the received data have no stop bit. In 16550 mode, it indicates the same condition for the data on top of the FIFO. When the CPU reads USR, it will clear this bit to a logical 0.

Bit 2: PBER. This bit is set to a logical 1 to indicate that the parity bit of received data is wrong. In 16550 mode, it indicates the same condition for the data on top of the FIFO. When the CPU reads USR, it will clear this bit to a logical 0.

Bit 1: OER. This bit is set to a logical 1 to indicate received data have been overwritten by the next received data before they were read by the CPU. In 16550 mode, it indicates the same condition instead of FIFO full. When the CPU reads USR, it will clear this bit to a logical 0.

Bit 0: RDR. This bit is set to a logical 1 to indicate received data are ready to be read by the CPU in the RBR or FIFO. After no data are left in the RBR or FIFO, the bit will be reset to a logical 0.

6.2.3 Handshake Control Register (HCR) (Read/Write)

This register controls the pins of the UART used for handshaking peripherals such as modem, and controls the diagnostic mode of the UART.

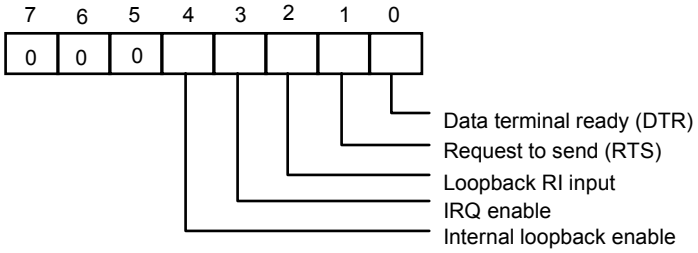

Bit 4: When this bit is set to a logical 1, the UART enters diagnostic mode by an internal loopback, as follows:

(1) SOUT is forced to logical 1, and SIN is isolated from the communication link instead of the TSR.

(2) Modem output pins are set to their inactive state.

(3) Modem input pins are isolated from the communication link and connect internally as DTR (bit 0 of HCR) →DSR#, RTS (bit 1 of HCR) →CTS#, Loopback RI input (bit 2 of HCR) → RI#and IRQ enable (bit 3 of HCR) →DCD#.

Aside from the above connections, the UART operates normally. This method allows the CPU to test the UART in a convenient way.

Bit 3: The UART interrupt output is enabled by setting this bit to a logic 1. In the diagnostic mode this bit is internally connected to the modem control input DCD#.

Bit 2: This bit is used only in the diagnostic mode. In the diagnostic mode this bit is internally connected to the modem control input RI#.

Bit 1: This bit controls the RTS# output. The value of this bit is inverted and output to RTS#.

Bit 0: This bit controls the DTR# output. The value of this bit is inverted and output to DTR#.

6.2.4 Handshake Status Register (HSR) (Read/Write)

This register reflects the current state of four input pins for handshake peripherals such as a modem and records changes on these pins.

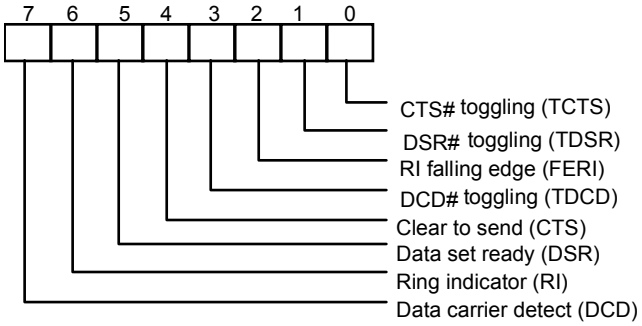

Bit 7: This bit is the opposite of the DCD# input. This bit is equivalent to bit 3 of HCR in loopback mode.

Bit 6: This bit is the opposite of the RI # input. This bit is equivalent to bit 2 of HCR in loopback mode.

Bit 5: This bit is the opposite of the DSR# input. This bit is equivalent to bit 0 of HCR in loopback mode.

Bit 4: This bit is the opposite of the CTS# input. This bit is equivalent to bit 1 of HCR in loopback mode.

Bit 3: TDCD. This bit indicates that the DCD# pin has changed state after HSR was read by the CPU.

Bit 2: FERI. This bit indicates that the RI # pin has changed from low to high state after HSR was read by the CPU.

Bit 1: TDSR. This bit indicates that the DSR# pin has changed state after HSR was read by the CPU.

Bit 0: TCTS. This bit indicates that the CTS# pin has changed state after HSR was read.

6.2.5 UART FIFO Control Register (UFR) (Write only)

This register is used to control the FIFO functions of the UART.

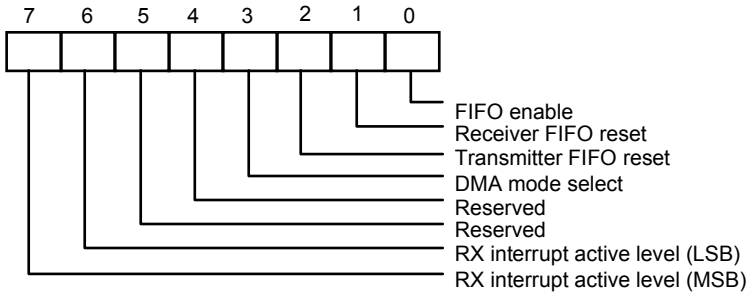

Bit 6, 7: These two bits are used to set the active level for the receiver FIFO interrupt. For example, if the interrupt active level is set as 4 bytes, once there are more than 4 data characters in the receiver FIFO, the interrupt will be activated to notify the CPU to read the data from the FIFO.

TABLE 6-3 FIFO TRIGGER LEVEL

BIT 7	BIT 6	RX FIFO INTERRUPT ACTIVE LEVEL (BYTES)
0	0	01
0	1	04
1	0	08
1	1	14

Bit 4, 5: Reserved

Bit 3: When this bit is programmed to logic 1, the DMA mode will change from mode 0 to mode 1 if UFR bit 0 = 1.

Bit 2: Setting this bit to a logical 1 resets the TX FIFO counter logic to initial state. This bit will clear to a logical 0 by itself after being set to a logical 1.

Bit 1: Setting this bit to a logical 1 resets the RX FIFO counter logic to initial state. This bit will clear to a logical 0 by itself after being set to a logical 1.

Bit 0: This bit enables the 16550 (FIFO) mode of the UART. This bit should be set to a logical 1 before other bits of UFR are programmed.

6.2.6 Interrupt Status Register (ISR) (Read only)

This register reflects the UART interrupt status, which is encoded by different interrupt sources into 3 bits.

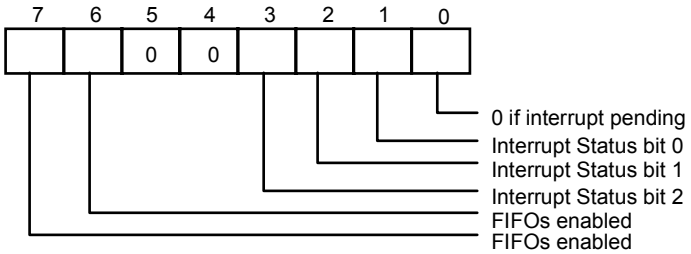

Bit 7, 6: These two bits are set to a logical 1 when UFR bit 0 = 1.

Bit 5, 4: These two bits are always logic 0.

Bit 3: In 16450 mode, this bit is 0. In 16550 mode, both bit 3 and 2 are set to a logical 1 when a time-out interrupt is pending.

Bit 2, 1: These two bits identify the priority level of the pending interrupt, as shown in the table below.

Bit 0: This bit is a logical 1 if there is no interrupt pending. If one of the interrupt sources has occurred, this bit will be set to a logical 0.

TABLE 6-4 INTERRUPT CONTROL FUNCTION

ISR				INTERRUPT SET AND FUNCTION			
Bit 3	Bit 2	Bit 1	Bit 0	Interrupt priority	Interrupt Type	Interrupt Source	Clear Interrupt
0	0	0	1	-	-	No Interrupt pending	-
0	1	1	0	First	UART Receive Status	1. OER = 1 2. PBER =1 3. NSER = 1 4. SBD = 1	Read USR
0	1	0	0	Second	RBR Data Ready	1. RBR data ready 2. FIFO interrupt active level reached	1. Read RBR 2. Read RBR until FIFO data under active level
1	1	0	0	Second	FIFO Data Timeout	Data present in RX FIFO for 4 characters period of time since last access of RX FIFO.	Read RBR
0	0	1	0	Third	TBR Empty	TBR empty	1. Write data into TBR 2. Read ISR (if priority is third)
0	0	0	0	Fourth	Handshake status	1. TCTS = 1 2. TDSR = 1 3. FERI = 1 4. TDCD = 1	Read HSR

** Bit 3 of ISR is enabled when bit 0 of UFR is logical 1.

6.2.7 Interrupt Control Register (ICR) (Read/Write)

This 8-bit register allows the five types of controller interrupts to activate the interrupt output signal separately. The interrupt system can be totally disabled by resetting bits 0 through 3 of the Interrupt Control Register (ICR). A selected interrupt can be enabled by setting the appropriate bits of this register to a logical 1.

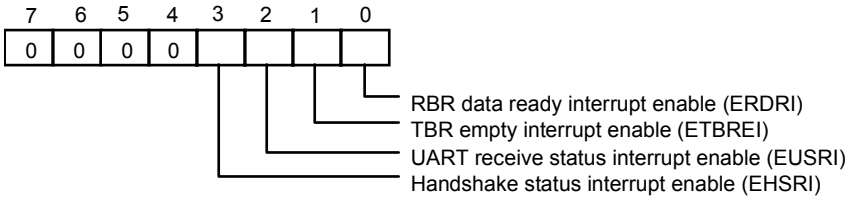

Bit 7-4: These four bits are always logic 0.

Bit 3: EHSRI. Setting this bit to a logical 1 enables the handshake status register interrupt.

Bit 2: EUSRI. Setting this bit to a logical 1 enables the UART status register interrupt.

Bit 1: ETBREI. Setting this bit to a logical 1 enables the TBR empty interrupt.

Bit 0: ERDRI. Setting this bit to a logical 1 enables the RBR data ready interrupt.

6.2.8 Programmable Baud Generator (BLL/BHL) (Read/Write)

Two 8-bit registers, BLL and BHL, compose a programmable baud generator that uses 24 MHz to generate a 1.8461 MHz frequency and divides it by a divisor from 1 to 2^{16}-1. The output frequency of the baud generator is the baud rate multiplied by 16, and this is the base frequency for the transmitter and receiver. The table in the next page illustrates the use of the baud generator with a frequency of 1.8461 MHz. In high-speed UART mode (refer to CR0C bit7 and CR0C bit6), the programmable baud generator directly uses 24 MHz and the same divisor as the normal speed divisor. In high-speed mode, the data transmission rate can be as high as 1.5M bps.

6.2.9 User-defined Register (UDR) (Read/Write)

This is a temporary register that can be accessed and defined by the user.

TABLE 6-5 BAUD RATE TABLE

BAUD RATE FROM DIFFERENT PRE-DIVIDER				
Pre-Div: 13 1.8461M Hz	Pre-Div:1.625 14.769M Hz	Pre-Div: 1.0 24M Hz	Decimal divisor used to generate 16X clock	Error Percentage between desired and actual
50	400	650	**2304**	**
75	600	975	**1536**	**
110	880	1430	**1047**	0.18%
134.5	1076	1478.5	**857**	0.099%
150	1200	1950	**768**	**
300	2400	3900	**384**	**
600	4800	7800	**192**	**
1200	9600	15600	**96**	**
1800	14400	23400	**64**	**
2000	16000	26000	**58**	0.53%
2400	19200	31200	**48**	**
3600	28800	46800	**32**	**
4800	38400	62400	**24**	**
7200	57600	93600	**16**	**
9600	76800	124800	**12**	**
19200	153600	249600	**6**	**
38400	307200	499200	**3**	**
57600	460800	748800	**2**	**
115200	921600	1497600	**1**	**

** The percentage error for all baud rates, except where indicated otherwise, is 0.16%.

Note. Pre-Divisor is determined by CRF0 of UART A and B.

7. PARALLEL PORT

7.1 Printer Interface Logic

The parallel port of W83977EF/EG makes possible the attachment of various devices that accept eight bits of parallel data at standard TTL level. W83977EF/EG supports an IBM XT/AT compatible parallel port (SPP), bi-directional parallel port (BPP), Enhanced Parallel Port (EPP), Extended Capabilities Parallel Port (ECP), Extension FDD mode (EXTFDD), Extension 2FDD mode (EXT2FDD) on the parallel port. Refer to the configuration registers for more information on disabling, power-down, and on selecting the mode of operation.

Table 7-1 shows the pin definitions for different modes of the parallel port.

TABLE 7-1-1 PARALLEL PORT CONNECTOR AND PIN DEFINITIONS

HOST CONNECTOR	PIN NUMBER OF W83977EF	PIN ATTRIBUTE	SPP	EPP	ECP
1	36	O	nSTB	nWrite	nSTB, HostClk[2]
2-9	31-26, 24-23	I/O	PD<0:7>	PD<0:7>	PD<0:7>
10	22	I	nACK	Intr	nACK, PeriphClk[2]
11	21	I	BUSY	nWait	BUSY, PeriphAck[2]
12	19	I	PE	PE	PEerror, nAckReverse[2]
13	18	I	SLCT	Select	SLCT, Xflag[2]
14	35	O	nAFD	nDStrb	nAFD, HostAck[2]
15	34	I	nERR	nError	nFault[1], nPeriphRequest[2]
16	33	O	nINIT	nInit	nINIT[1], nReverseRqst[2]
17	**32**	**O**	**nSLIN**	**nAStrb**	**nSLIN[1] , ECPMode[2]**

Notes:

n<name > : Active Low

1. Compatible Mode
2. High Speed Mode
3. For more information, refer to the IEEE 1284 standard.

TABLE 5-1-2 PARALLEL PORT CONNECTOR AND PIN DEFINITIONS

HOST CONNECTOR	PIN NUMBER OF W83977EF	PIN ATTRIBUTE	SPP	PIN ATTRIBUTE	EXT2FDD	PIN ATTRIBUTE	EXTFDD
1	36	O	nSTB	---	---	---	---
2	31	I/O	PD0	I	INDEX2#	I	INDEX2#
3	30	I/O	PD1	I	TRAK02#	I	TRAK02#
4	29	I/O	PD2	I	WP2#	I	WP2#
5	28	I/O	PD3	I	RDATA2#	I	RDATA2#
6	27	I/O	PD4	I	DSKCHG2#	I	DSKCHG2#
7	26	I/O	PD5	---	---	---	---
8	24	I/O	PD6	OD	MOA2#	---	---
9	23	I/O	PD7	OD	DSA2#	---	---
10	22	I	nACK	OD	DSB2#	OD	DSB2#
11	21	I	BUSY	OD	MOB2#	OD	MOB2#
12	19	I	PE	OD	WD2#	OD	WD2#
13	18	I	SLCT	OD	WE2#	OD	WE2#
14	35	O	nAFD	OD	RWC2#	OD	RWC2#
15	34	I	nERR	OD	HEAD2#	OD	HEAD2#
16	33	O	nINIT	OD	DIR2#	OD	DIR2#
17	32	O	nSLIN	OD	STEP2#	OD	STEP2#

7.2 Enhanced Parallel Port (EPP)

TABLE 7-2 PRINTER MODE AND EPP REGISTER ADDRESS

A2	A1	A0	REGISTER	NOTE
0	0	0	Data port (R/W)	1
0	0	1	Printer status buffer (Read)	1
0	1	0	Printer control latch (Write)	1
0	1	0	Printer control swapper (Read)	1
0	1	1	EPP address port (R/W)	2
1	0	0	EPP data port 0 (R/W)	2
1	0	1	EPP data port 1 (R/W)	2
1	1	0	EPP data port 2 (R/W)	2
1	1	1	EPP data port 2 (R/W)	2

Notes:

1. These registers are available in all modes.
2. These registers are available only in EPP mode.

7.2.1 Data Swapper

The system microprocessor can read the contents of the printer's data latch by reading the data swapper.

7.2.2 Printer Status Buffer

The system microprocessor can read the printer status by reading the address of the printer status buffer. The bit definitions are as follows:

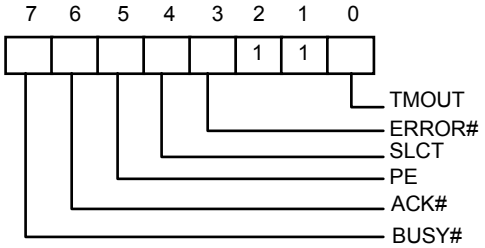

Bit 7: This signal is active during data entry, when the printer is off-line during printing, when the print head is changing position, or during an error state. When this signal is active, the printer is busy and cannot accept data.

Bit 6: This bit represents the current state of the printer's ACK# signal. A 0 means the printer has received a character and is ready to accept another. Normally, this signal will be active for approximately 5 microseconds before BUSY# stops.

Bit 5: Logical 1 means the printer has detected the end of paper.

Bit 4: Logical 1 means the printer is selected.

Bit 3: Logical 0 means the printer has encountered an error condition.

Bit 1, 2: These two bits are not implemented and are logic one during a read of the status register.

Bit 0: This bit is valid in EPP mode only. It indicates that a 10 μS time-out has occurred on the EPP bus. A logic 0 means that no time-out error has occurred; a logic 1 means that a time-out error has been detected. Writing a logic 1 to this bit will clear the time-out status bit; writing a logic 0 has no effect.

7.2.3 Printer Control Latch and Printer Control Swapper

The system microprocessor can read the contents of the printer control latch by reading the printer control swapper. Bit definitions are as follows:

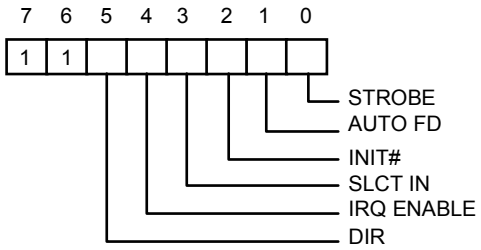

Bit 7, 6: These two bits are a logic one during a read. They can be written.

Bit 5: Direction control bit

When this bit is a logic 1, the parallel port is in input mode (read); when it is a logic 0, the parallel port is in output mode (write). This bit can be read and written. In SPP mode, this bit is invalid and fixed at zero.

Bit 4: A 1 in this position allows an interrupt to occur when ACK# changes from low to high.

Bit 3: A 1 in this bit position selects the printer.

Bit 2: A 0 starts the printer (50 microsecond pulse, minimum).

Bit 1: A 1 causes the printer to line-feed after a line is printed.

Bit 0: A 0.5 microsecond minimum high active pulse clocks data into the printer. Valid data must be present for a minimum of 0.5 microseconds before and after the strobe pulse.

7.2.4 EPP Address Port

The address port is available only in EPP mode. Bit definitions are as follows:

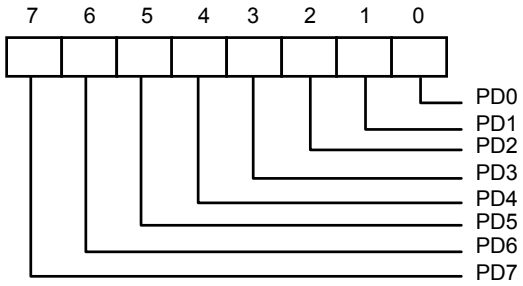

The contents of DB0-DB7 are buffered (non-inverting) and output to ports PD0-PD7 during a write operation. The leading edge of IOW# causes an EPP address write cycle to be performed, and the trailing edge of IOW# latches the data for the duration of the EPP write cycle.

PD0-PD7 ports are read during a read operation. The leading edge of IOR# causes an EPP address read cycle to be performed and the data to be output to the host CPU.

7.2.5 EPP Data Port 0-3

These four registers are available only in EPP mode. Bit definitions of each data port are as follows:

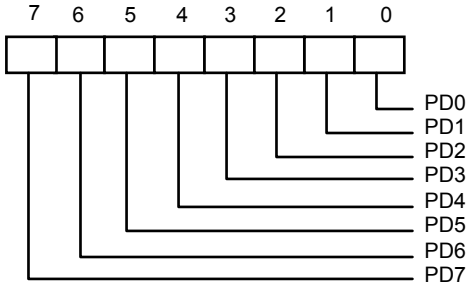

When accesses are made to any EPP data port, the contents of DB0-DB7 are buffered (non-inverting) and output to the ports PD0-PD7 during a write operation. The leading edge of IOW# causes an EPP data write cycle to be performed, and the trailing edge of IOW# latches the data for the duration of the EPP write cycle.

During a read operation, ports PD0-PD7 are read, and the leading edge of IOR# causes an EPP read cycle to be performed and the data to be output to the host CPU.

7.2.6 Bit Map of Parallel Port and EPP Registers

REGISTER	7	6	5	4	3	2	1	0
Data Port (R/W)	PD7	PD6	PD5	PD4	PD3	PD2	PD1	PD0
Status Buffer (Read)	BUSY#	ACK#	PE	SLCT	ERROR#	1	1	TMOUT
Control Swapper (Read)	1	1	1	IRQEN	SLIN	INIT#	AUTOFD#	STROBE#
Control Latch (Write)	1	1	DIR	IRQ	SLIN	INIT#	AUTOFD#	STROBE#
EPP Address Port R/W)	PD7	PD6	PD5	PD4	PD3	PD2	PD1	PD0
EPP Data Port 0 (R/W)	PD7	PD6	PD5	PD4	PD3	PD2	PD1	PD0
EPP Data Port 1 (R/W)	PD7	PD6	PD5	PD4	PD3	PD2	PD1	PD0
EPP Data Port 2 (R/W)	PD7	PD6	PD5	PD4	PD3	PD2	PD1	PD0
EPP Data Port 3 (R/W)	PD7	PD6	PD5	PD4	PD3	PD2	PD1	PD0

7.2.7 EPP Pin Descriptions

EPP NAME	TYPE	EPP DESCRIPTION
nWrite	O	Denotes an address or data read or write operation.
PD<0:7>	I/O	Bi-directional EPP address and data bus.
Intr	I	Used by peripheral device to interrupt the host.
nWait	I	Inactive to acknowledge that data transfer is completed. Active to indicate that the device is ready for the next transfer.
PE	I	Paper end; same as SPP mode.
Select	I	Printer selected status; same as SPP mode.
nDStrb	O	This signal is active low. It denotes a data read or write operation.
nError	I	Error; same as SPP mode.
nInits	O	This signal is active low. When it is active, the EPP device is reset to its initial operating mode.
nAStrb	O	This signal is active low. It denotes an address read or write operation.

7.2.8 EPP Operation

When the EPP mode is selected in the configuration register, the standard and bi-directional modes are also available. The PDx bus is in the standard or bi-directional mode when no EPP read, write, or address cycle is currently being executed. In this condition all output signals are set by the SPP Control Port and the direction is controlled by DIR of the Control Port.

A watchdog timer is required to prevent system lockup. The timer indicates that more than 10 μS have elapsed from the start of the EPP cycle to the time WAIT# is deasserted. The current EPP cycle is aborted when a time-out occurs. The time-out condition is indicated in Status bit 0.

7.2.8.1. EPP Operation

The EPP operates on a two-phase cycle. First, the host selects the register within the device for subsequent operations. Second, the host performs a series of read and/or write byte operations to the selected register. Four operations are supported on the EPP: Address Write, Data Write, Address Read, and Data Read. All operations on the EPP device are performed asynchronously.

7.2.8.2. EPP Version 1.9 Operation

The EPP read/write operation can be completed under the following conditions:

a. If the nWait is active low, when the read cycle (nWrite inactive high, nDStrb/nAStrb active low) or write cycle (nWrite active low, nDStrb/nAStrb active low) starts, the read/write cycle proceeds normally and will be completed when nWait goes inactive high.

b. If nWait is inactive high, the read/write cycle will not start. It must wait until nWait changes to active low, at which time it will start as described above.

7.2.8.3. EPP Version 1.7 Operation

The EPP read/write cycle can start without checking whether nWait is active or inactive. Once the read/write cycle starts, however, it will not terminate until nWait changes from active low to inactive high.

7.3 Extended Capabilities Parallel (ECP) Port

This port is software and hardware compatible with existing parallel ports, so it may be used as a standard printer mode if ECP is not required. It provides an automatic high burst-bandwidth channel that supports DMA for ECP in both the forward (host to peripheral) and reverse (peripheral to host) directions.

Small FIFOs are used in both forward and reverse directions to improve the maximum bandwidth requirement. The size of the FIFO is 16 bytes. The ECP port supports an automatic handshake for the standard parallel port to improve compatibility mode transfer speed.

The ECP port supports run-length-encoded (RLE) decompression (required) in hardware. Compression is accomplished by counting identical bytes and transmitting an RLE byte that indicates how many times the next byte is to be repeated. Hardware support for compression is optional.

For more information about the ECP Protocol, refer to the Extended Capabilities Port Protocol and ISA Interface Standard.

7.3.1 ECP Register and Mode Definitions

NAME	ADDRESS	I/O	ECP MODES	FUNCTION
data	Base+000h	R/W	000-001	Data Register
ecpAFifo	Base+000h	R/W	011	ECP FIFO (Address)
dsr	Base+001h	R	All	Status Register
dcr	Base+002h	R/W	All	Control Register
cFifo	Base+400h	R/W	010	Parallel Port Data FIFO
ecpDFifo	Base+400h	R/W	011	ECP FIFO (DATA)
tFifo	Base+400h	R/W	110	Test FIFO
cnfgA	Base+400h	R	111	Configuration Register A
cnfgB	Base+401h	R/W	111	Configuration Register B
ecr	Base+402h	R/W	All	Extended Control Register

Note: The base addresses are specified by CR60 and 61, which are determined by configuration register or hardware setting.

MODE	DESCRIPTION
000	SPP mode
001	PS/2 Parallel Port mode
010	Parallel Port Data FIFO mode
011	ECP Parallel Port mode
100	EPP mode (If this option is enabled in the CRF0 to select ECP/EPP mode)
101	Reserved
110	Test mode
111	Configuration mode

Note: The mode selection bits are bit 7-5 of the Extended Control Register.

7.3.2 Data and ecpAFifo Port

Modes 000 (SPP) and 001 (PS/2) (Data Port)

During a write operation, the Data Register latches the contents of the data bus on the rising edge of the input. The contents of this register are output to the PD0-PD7 ports. During a read operation, ports PD0-PD7 are read and output to the host. The bit definitions are as follows:

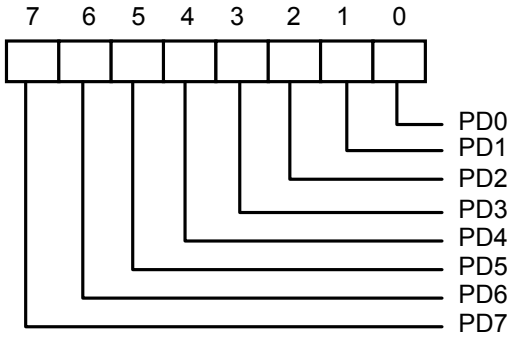

Mode 011 (ECP FIFO-Address/RLE)

A data byte written to this address is placed in the FIFO and tagged as an ECP Address/RLE. The hardware at the ECP port transmits this byte to the peripheral automatically. The operation of this register is defined only for the forward direction. The bit definitions are as follows:

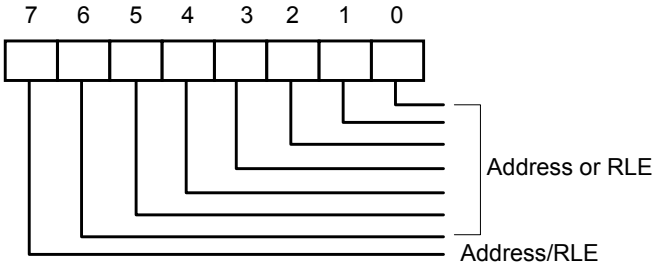

7.3.3 Device Status Register (DSR)

These bits are at low level during a read of the Printer Status Register. The bits of this status register are defined as follows:

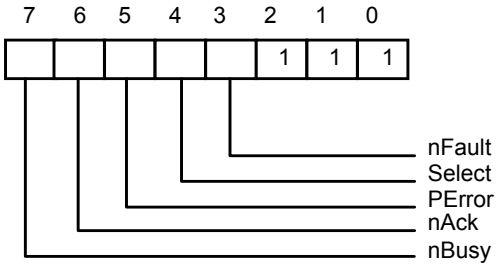

Bit 7: This bit reflects the complement of the Busy input.

Bit 6: This bit reflects the nAck input.

Bit 5: This bit reflects the PError input.

Bit 4: This bit reflects the Select input.

Bit 3: This bit reflects the nFault input.

Bit 2-0: These three bits are not implemented and are always logic one during a read.

7.3.4 Device Control Register (DCR)

The bit definitions are as follows:

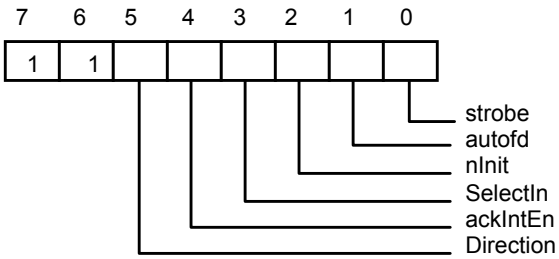

Bit 6, 7: These two bits are logic one during a read and cannot be written.

Bit 5: This bit has no effect and the direction is always out if mode = 000 or mode = 010. Direction is valid in all other modes.

0 the parallel port is in output mode.

1 the parallel port is in input mode.

Bit 4: Interrupt request enable. When this bit is set to a high level, it may be used to enable interrupt requests from the parallel port to the CPU due to a low to high transition on the ACK# input.

Bit 3: This bit is inverted and output to the SLIN# output.

0 The printer is not selected.

1 The printer is selected.

Bit 2: This bit is output to the INIT# output.

Bit 1: This bit is inverted and output to the AFD# output.

Bit 0: This bit is inverted and output to the STB# output.

7.3.5 CFIFO (Parallel Port Data FIFO) Mode = 010

This mode is defined only for the forward direction. The standard parallel port protocol is used by a hardware handshake to the peripheral to transmit bytes written or DMAed from the system to this FIFO. Transfers to the FIFO are byte aligned.

7.3.6 ECPDFIFO (ECP Data FIFO) Mode = 011

When the direction bit is 0, bytes written or DMAed from the system to this FIFO are transmitted by a hardware handshake to the peripheral using the ECP parallel port protocol. Transfers to the FIFO are byte aligned.

When the direction bit is 1, data bytes from the peripheral are read under automatic hardware handshake from ECP into this FIFO. Reads or DMAs from the FIFO will return bytes of ECP data to the system.

7.3.7 TFIFO (Test FIFO Mode) Mode = 110

Data bytes may be read, written, or DMAed to or from the system to this FIFO in any direction. Data in the tFIFO will not be transmitted to the parallel port lines. However, data in the tFIFO may be displayed on the parallel port data lines.

7.3.8 CNFGA (Configuration Register A) Mode = 111

This register is a read-only register. When it is read, 10H is returned. This indicates to the system that this is an 8-bit implementation.

7.3.9 CNFGB (Configuration Register B) Mode = 111

The bit definitions are as follows:

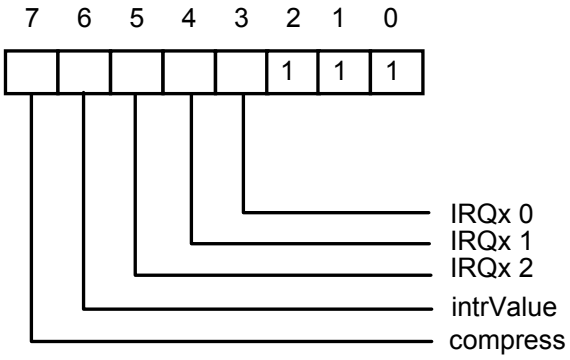

Bit 7: This bit is read-only. It is at low level during a read. This means that this chip does not support hardware RLE compression.

Bit 6: Returns the value on the ISA IRQ line to determine possible conflicts.

Bit 5-3: Reflect the IRQ resource assigned for ECP port.

cnfgB[5:3]	IRQ resource
000	reflect other IRQ resources selected by PnP register (default)
001	IRQ7
010	IRQ9
011	IRQ10
100	IRQ11
101	IRQ14
110	IRQ15
111	IRQ5

Bit 2-0: These five bits are at high level during a read and can be written.

7.3.10 ECR (Extended Control Register) Mode = all

This register controls the extended ECP parallel port functions. The bit definitions are follows:

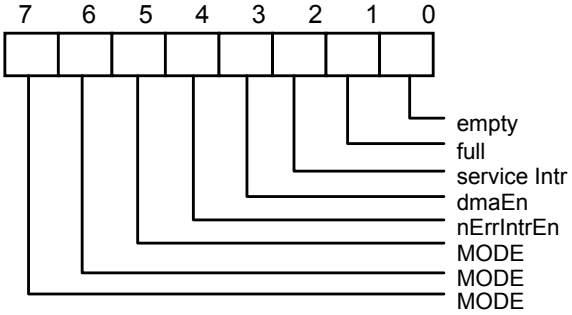

Bit 7-5: These bits are read/write and select the mode.

- 000 Standard Parallel Port mode. The FIFO is reset in this mode.
- 001 PS/2 Parallel Port mode. This is the same as 000 except that direction may be used to tri-state the data lines and reading the data register returns the value on the data lines and not the value in the data register.
- 010 Parallel Port FIFO mode. This is the same as 000 except that bytes are written or DMAed to the FIFO. FIFO data are automatically transmitted using the standard parallel port protocol. This mode is useful only when direction is 0.
- 011 ECP Parallel Port Mode. When the direction is 0 (forward direction), bytes placed into the ecpDFifo and bytes written to the ecpAFifo are placed in a single FIFO and auto transmitted to the peripheral using ECP Protocol. When the direction is 1 (reverse direction), bytes are moved from the ECP parallel port and packed into bytes in the ecpDFifo.
- 100 Selects EPP Mode. In this mode, EPP is activated if the EPP mode is selected.
- 101 Reserved.
- 110 Test Mode. The FIFO may be written and read in this mode, but the data will not be transmitted on the parallel port.
- 111 Configuration Mode. The confgA and confgB registers are accessible at 0x400 and 0x401 in this mode.

Bit 4: Read/Write (Valid only in ECP Mode)

1 Disables the interrupt generated on the asserting edge of nFault.

0 Enables an interrupt pulse on the high to low edge of nFault. If nFault is asserted (interrupt) an interrupt will be generated and this bit is written from a 1 to 0.

Bit 3: Read/Write

1 Enables DMA.

0 Disables DMA unconditionally.

Bit 2: Read/Write

1 Disables DMA and all of the service interrupts.

0 Enables one of the following cases of interrupts. When one of the service interrupts has occurred, the serviceIntr bit is set to a 1 by hardware. This bit must be reset to 0 to re-enable the interrupts. Writing a 1 to this bit will not cause an interrupt.

(a) dmaEn = 1: During DMA this bit is set to a 1 when terminal count is reached.

(b) dmaEn = 0 direction = 0: This bit is set to 1 whenever there are writeIntr Threshold or more bytes free in the FIFO.

(c) dmaEn = 0 direction = 1: This bit is set to 1 whenever there are readIntr Threshold or more valid bytes to be read from the FIFO.

Bit 1: Read only

0 The FIFO has at least 1 free byte.

1 The FIFO cannot accept another byte or the FIFO is completely full.

Bit 0: Read only

0 The FIFO contains at least 1 byte of data.

1 The FIFO is completely empty.

7.3.11 Bit Map of ECP Port Registers

	D7	D6	D5	D4	D3	D2	D1	D0	NOTE
data	PD7	PD6	PD5	PD4	PD3	PD2	PD1	PD0	
ecpAFifo	Addr/RLE	Address or RLE field							2
dsr	nBusy	nAck	PError	Select	nFault	1	1	1	1
dcr	1	1	Directio	ackIntEn	SelectIn	nInit	autofd	strobe	1
cFifo	Parallel Port Data FIFO								2
ecpDFifo	ECP Data FIFO								2
tFifo	Test FIFO								2
cnfgA	0	0	0	1	0	0	0	0	
cnfgB	compress	intrValue	1	1	1	1	1	1	
ecr	MODE			nErrIntrEn	dmaEn	serviceIntr	full	empty	

Notes:

1. These registers are available in all modes.
2. All FIFOs use one common 16-byte FIFO.

7.3.12 ECP Pin Descriptions

NAME	TYPE	DESCRIPTION
nStrobe (HostClk)	O	The nStrobe registers data or address into the slave on the asserting edge during write operations. This signal handshakes with Busy.
PD<7:0>	I/O	These signals contains address or data or RLE data.
nAck (PeriphClk)	I	This signal indicates valid data driven by the peripheral when asserted. This signal handshakes with nAutoFd in reverse.
Busy (PeriphAck)	I	This signal deasserts to indicate that the peripheral can accept data. It indicates whether the data lines contain ECP command information or data in the reverse direction. When in reverse direction, normal data are transferred when Busy (PeriphAck) is high and an 8-bit command is transferred when it is low.
PError (nAckReverse)	I	This signal is used to acknowledge a change in the direction of the transfer (asserted = forward). The peripheral drives this signal low to acknowledge nReverseRequest. The host relies upon nAckReverse to determine when it is permitted to drive the data bus.
Select (Xflag)	I	Indicates printer on line.
nAutoFd (HostAck)	O	Requests a byte of data from the peripheral when it is asserted. This signal indicates whether the data lines contain ECP address or data in the forward direction. When in forward direction, normal data are transferred when nAutoFd (HostAck) is high and an 8-bit command is transferred when it is low.
nFault (nPeriphRequest)	I	Generates an error interrupt when it is asserted. This signal is valid only in the forward direction. The peripheral is permitted (but not required) to drive this pin low to request a reverse transfer during ECP Mode.
nInit (nReverseRequest)	O	This signal sets the transfer direction (asserted = reverse, deasserted = forward). This pin is driven low to place the channel in the reverse direction.
nSelectIn (ECPMode)	O	This signal is always deasserted in ECP mode.

7.3.13 ECP Operation

The host must negotiate on the parallel port to determine if the peripheral supports the ECP protocol before ECP operation. After negotiation, it is necessary to initialize some of the port bits. The following are required:

(a) Set direction = 0, enabling the drivers.

(b) Set strobe = 0, causing the nStrobe signal to default to the deasserted state.

(c) Set autoFd = 0, causing the nAutoFd signal to default to the deasserted state.

(d) Set mode = 011 (ECP Mode)

ECP address/RLE bytes or data bytes may be sent automatically by writing the ecpAFifo or ecpDFifo, respectively.

7.3.13.1. Mode Switching

Software will execute P1284 negotiation and all operations prior to a data transfer phase under programmed I/O control (mode 000 or 001). Hardware provides an automatic control line handshake, moving data between the FIFO and the ECP port only in the data transfer phase (mode 011 or 010).

If the port is in mode 000 or 001 it may switch to any other mode. If the port is not in mode 000 or 001 it can only be switched into mode 000 or 001. The direction can be changed only in mode 001.

When in extended forward mode, the software should wait for the FIFO to be empty before switching back to mode 000 or 001. In ECP reverse mode the software waits for all the data to be read from the FIFO before changing back to mode 000 or 001.

7.3.13.2. Command/Data

ECP mode allows the transfer of normal 8-bit data or 8-bit commands. In the forward direction, normal data are transferred when HostAck is high and an 8-bit command is transferred when HostAck is low. The most significant bits of the command indicate whether it is a run-length count (for compression) or a channel address.

In the reverse direction, normal data are transferred when PeriphAck is high and an 8-bit command is transferred when PeriphAck is low. The most significant bit of the command is always zero.

7.3.13.3. Data Compression

The W83977EF supports run length encoded (RLE) decompression in hardware and can transfer compressed data to a peripheral. Note that the odd (RLE) compression in hardware is not supported. In order to transfer data in ECP mode, the compression count is written to the ecpAFifo and the data byte is written to the ecpDFifo.

7.3.14 FIFO Operation

The FIFO threshold is set in configuration register 5. All data transfers to or from the parallel port can proceed in DMA or Programmed I/O (non-DMA) mode, as indicated by the selected mode. The FIFO is used by selecting the Parallel Port FIFO mode or ECP Parallel Port Mode. After a reset, the FIFO is disabled.

7.3.15 DMA Transfers

DMA transfers are always to or from the ecpDFifo, tFifo, or CFifo. The DMA uses the standard PC DMA services. The ECP requests DMA transfers from the host by activating the PDRQ pin. The DMA will empty or fill the FIFO using the appropriate direction and mode. When the terminal count in the DMA controller is reached, an interrupt is generated and serviceIntr is asserted, which will disable the DMA.

7.3.16 Programmed I/O (NON-DMA) Mode

The ECP or parallel port FIFOs can also be operated using interrupt driven programmed I/O. Programmed I/O transfers are to the ecpDFifo at 400H and ecpAFifo at 000H or from the ecpDFifo located at 400H, or to/from the tFifo at 400H. The host must set the direction, state, dmaEn = 0 and serviceIntr = 0 in the programmed I/O transfers.

The ECP requests programmed I/O transfers from the host by activating the IRQ pin. The programmed I/O will empty or fill the FIFO using the appropriate direction and mode.

7.4 Extension FDD Mode (EXTFDD)

In this mode, W83977EF/EG changes the printer interface pins to FDC input/output pins, allowing the user to install a second floppy disk drive (FDD B) through the DB-25 printer connector. The pin assignments for the FDC input/output pins are shown in Table 5-1.

After the printer interface is set to EXTFDD mode, the following occur:

(1) Pins MOB# and DSB# will be forced to inactive state.

(2) PinsDSKCHG#, RDATA#, WP#, TRAK0#, INDEX# will be logically ORed with pins PD4-PD0 to serve as input signals to the FDC.

(3) Pins PD4-PD0 each will have an internal resistor of about 1K ohm to serve as pull-up resistor for FDD open drain/collector output.

(4) If the parallel port is set to EXTFDD mode after the system has booted DOS or another operating system, a warm reset is needed to enable the system to recognize the extension floppy drive.

7.5 Extension 2FDD Mode (EXT2FDD)

In this mode, W83977EF/EG changes the printer interface pins to FDC input/output pins, allowing the user to install two external floppy disk drives through the DB-25 printer connector to replace internal floppy disk drives A and B. The pin assignments for the FDC input/output pins are shown in Table5-1.

After the printer interface is set to EXTFDD mode, the following occur:

(1) Pins MOA#, DSA#, MOB#, and DSB# will be forced to inactive state.

(2) Pins DSKCHG#, RDATA#, WP#, TRAK0#, and INDEX# will be logically ORed with pins PD4-PD0 to serve as input signals to the FDC.

(3) Pins PD4-PD0 each will have an internal resistor of about 1K ohm to serve as pull-up resistor for FDD open drain/collector output.

(4) If the parallel port is set to EXT2FDD mode after the system has booted DOS or another operating system, a warm reset is needed to enable the system to recognize the extension floppy drive.

8. KEYBOARD CONTROLLER

The KBC (8042 with licensed KB BIOS) circuit of W83977EF/EG is designed to provide the functions needed to interface a CPU with a keyboard and/or a PS/2 mouse, and can be used with IBM®-compatible personal computers or PS/2-based systems. The controller receives serial data from the keyboard or PS/2 mouse, checks the parity of the data, and presents the data to the system as a byte of data in its output buffer. Then, the controller will assert an interrupt to the system when data are placed in its output buffer. The keyboard and PS/2 mouse are required to acknowledge all data transmissions. No transmission should be sent to the keyboard or PS/2 mouse until an acknowledge is received for the previous data byte.

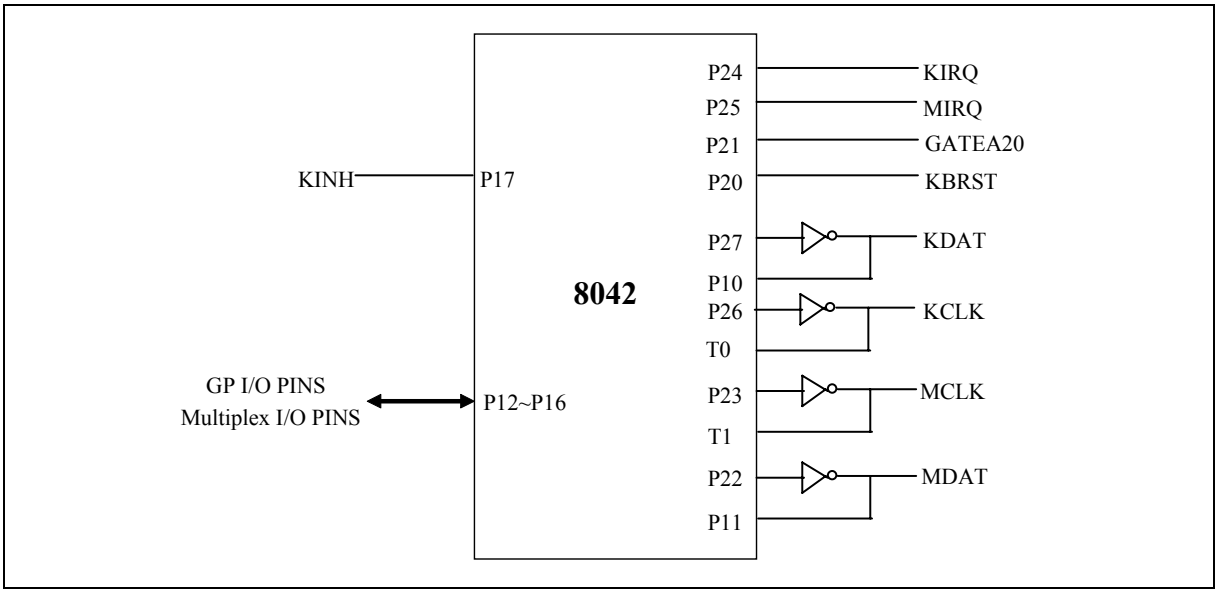

Keyboard and Mouse Interface

8.1 Output Buffer

The output buffer is an 8-bit read-only register at I/O address 60H (Default, PnP programmable I/O address LD5-CR60 and LD5-CR61). The keyboard controller uses the output buffer to send the scan code received from the keyboard and data bytes required by commands to the system. The output buffer can only be read when the output buffer full bit in the register is "1".

8.2 Input Buffer

The input buffer is an 8-bit write-only register at I/O address 60H or 64H (Default, PnP programmable I/O address LD5-CR60, LD5-CR61, LD5-CR62, and LD5-CR63). Writing to address 60H sets a flag to indicate a data write; writing to address 64H sets a flag to indicate a command write. Data written to I/O address 60H is sent to keyboard (unless the keyboard controller is expecting a data byte) through the controller's input buffer only if the input buffer full bit in the status register is “0”.

8.3 Status Register

The status register is an 8-bit read-only register at I/O address 64H (Default, PnP programmable I/O address LD5-CR62 and LD5-CR63), that holds information about the status of the keyboard controller and interface. It may be read at any time.

BIT	BIT FUNCTION	DESCRIPTION
0	Output Buffer Full	0: Output buffer empty 1: Output buffer full
1	Input Buffer Full	0: Input buffer empty 1: Input buffer full
2	System Flag	This bit may be set to 0 or 1 by writing to the system flag bit in the command byte of the keyboard controller. It defaults to 0 after a power-on reset.
3	Command/Data	0: Data byte 1: Command byte
4	Inhibit Switch	0: Keyboard is inhibited 1: Keyboard is not inhibited
5	Auxiliary Device Output Buffer	0: Auxiliary device output buffer empty 1: Auxiliary device output buffer full
6	General Purpose Time-out	0: No time-out error 1: Time-out error
7	Parity Error	0: Odd parity 1: Even parity (error)

8.4 Commands

<table>
<tr><th>COMMAND</th><th>FUNCTION</th></tr>
<tr><td>20h</td><td>Read Command Byte of Keyboard Controller</td></tr>
<tr><td>60h</td><td>Write Command Byte of Keyboard Controller
<table>
<tr><th>BIT</th><th>BIT DEFINITION</th></tr>
<tr><td>7</td><td>Reserved</td></tr>
<tr><td>6</td><td>IBM Keyboard Translate Mode</td></tr>
<tr><td>5</td><td>Disable Auxiliary Device</td></tr>
<tr><td>4</td><td>Disable Keyboard</td></tr>
<tr><td>3</td><td>Reserve</td></tr>
<tr><td>2</td><td>System Flag</td></tr>
<tr><td>1</td><td>Enable Auxiliary Interrupt</td></tr>
<tr><td>0</td><td>Enable Keyboard Interrupt</td></tr>
</table></td></tr>
<tr><td>A4h</td><td>Test Password
Returns 0Fah if Password is loaded
Returns 0F1h if Password is not loaded</td></tr>
<tr><td>A5h</td><td>Load Password
Load Password until a "0" is received from the system</td></tr>
<tr><td>A6h</td><td>Enable Password
Enable the checking of keystrokes for a match with the password</td></tr>
<tr><td>A7h</td><td>Disable Auxiliary Device Interface</td></tr>
<tr><td>A8h</td><td>Enable Auxiliary Device Interface</td></tr>
<tr><td>A9h</td><td>Interface Test
<table>
<tr><th>BIT</th><th>BIT DEFINITION</th></tr>
<tr><td>00</td><td>No Error Detected</td></tr>
<tr><td>01</td><td>Auxiliary Device "Clock" line is stuck low</td></tr>
<tr><td>02</td><td>Auxiliary Device "Clock" line is stuck high</td></tr>
<tr><td>03</td><td>Auxiliary Device "Data" line is stuck low</td></tr>
<tr><td>04</td><td>Auxiliary Device "Data" line is stuck low</td></tr>
</table></td></tr>
<tr><td>AAh</td><td>Self-test
Returns 055h if self test succeeds</td></tr>
</table>

Continued.

<table>
<tr><th>COMMAND</th><th>FUNCTION</th></tr>
<tr><td>ABh</td><td>Interface Test
<table>
<tr><th>BIT</th><th>BIT DEFINITION</th></tr>
<tr><td>00</td><td>No Error Detected</td></tr>
<tr><td>01</td><td>Keyboard "Clock" line is stuck low</td></tr>
<tr><td>02</td><td>Keyboard "Clock" line is stuck high</td></tr>
<tr><td>03</td><td>Keyboard "Data" line is stuck low</td></tr>
<tr><td>04</td><td>Keyboard "Data" line is stuck high</td></tr>
</table></td></tr>
<tr><td>ADh</td><td>Disable Keyboard Interface</td></tr>
<tr><td>AEh</td><td>Enable Keyboard Interface</td></tr>
<tr><td>C0h</td><td>Read Input Port(P1) and send data to the system</td></tr>
<tr><td>C1h</td><td>Continuously puts the lower four bits of Port1 into STATUS register</td></tr>
<tr><td>C2h</td><td>Continuously puts the upper four bits of Port1 into STATUS register</td></tr>
<tr><td>D0h</td><td>Send Port2 value to the system</td></tr>
<tr><td>D1h</td><td>Only set/reset GateA20 line based on the system data bit 1</td></tr>
<tr><td>D2h</td><td>Send data back to the system as if it came from Keyboard</td></tr>
<tr><td>D3h</td><td>Send data back to the system as if it came from Auxiliary Device</td></tr>
<tr><td>D4h</td><td>Output next received byte of data from system to Auxiliary Device</td></tr>
<tr><td>E0h</td><td>Reports the status of the test inputs</td></tr>
<tr><td>FXh</td><td>Pulse only RC(the reset line) low for 6μS if Command byte is even</td></tr>
</table>

8.5 Hardware GATEA20/Keyboard Reset Control Logic

The KBC implements a hardware control logic to speed-up GATEA20 and KBRESET. This control logic is controlled by LD5-CRF0 as follows:

8.5.1 KB Control Register (Logic Device 5, CR-F0)

BIT	7	6	5	4	3	2	1	0
NAME	KCLKS1	KCLKS0	Reserved	Reserved	Reserved	P92EN	HGA20	HKBRST

KCLKS1, KCLKS0

This 2 bits are for the KBC clock rate selection.

= 0 0 KBC clock input is 6 Mhz
= 0 1 KBC clock input is 8 Mhz
= 1 0 KBC clock input is 12 Mhz
= 1 1 KBC clock input is 16 Mhz

P92EN (Port 92 Enable)

A "1" on this bit enables Port 92 to control GATEA20 and KBRESET.

A "0" on this bit disables Port 92 functions.

HGA20 (Hardware GATE A20)

A "1" on this bit selects hardware GATEA20 control logic to control GATE A20 signal.

A "0" on this bit disables hardware GATEA20 control logic function.

HKBRST (Hardware Keyboard Reset)

A "1" on this bit selects hardware KB RESET control logic to control KBRESET signal.

A "0" on this bit disables hardware KB RESET control logic function.

When the KBC receives data that follows a "D1" command, the hardware control logic sets or clears GATE A20 according to the received data bit 1. Similarly, the hardware control logic sets or clears KBRESET depending on the received data bit 0. When the KBC receives a "FE" command, the KBRESET is pulse low for 6μS(Min.) with 14μS(Min.) delay.

GATEA20 and KBRESET are controlled by either the software control or the hardware control logic and they are mutually exclusive. Then, GATEA20 and KBRESET are merged along with Port92 when P92EN bit is set.

8.5.2 Port 92 Control Register (Default Value = 0x24)

BIT	7	6	5	4	3	2	1	0
NAME	Res. (0)	Res. (0)	Res. (1)	Res. (0)	Res. (0)	Res. (1)	SGA20	PLKBRST

SGA20 (Special GATE A20 Control)

A "1" on this bit drives GATE A20 signal to high.

A "0" on this bit drives GATE A20 signal to low.

PLKBRST (Pull-Low KBRESET)

A "1" on this bit causes KBRESET to drive low for 6μS(Min.) with 14μS(Min.) delay. Before issuing another keyboard reset command, the bit must be cleared.

8.6 OnNow / Security Keyboard and Mouse Wake-Up

---- Programmable Keyboard / Mouse Wake-Up Functions

Winbond's unique programmable keyboard/ mouse Wake-Up functions provide the system diversified methods for either OnNow Wake-Up application, or security control application. The keyboard or mouse can Wake-Up the system by producing a panel switch low pulse on PANSWOT# pin, and connect it to chipset (for example Intel™ chipset TX, LX PIIX4) panel switch input. The Wake-Up conditions can be programmed as pre-determined or any keys/buttons. To implement this function, a 32.768KHz crystal must be installed between XTAL1 and XTAL2, or a 32.768KHz clock to be connected to XTAL1 and leave XTAL2 open. The V_{SB} pin must be connected to +5V V_{SB} of ATX power supply, and an external battery should be installed on V_{BAT} pin to store the data (the passwords and Wake-Up status which had been set already) when power fails.

8.6.1 Keyboard Wake-Up Function

The keyboard Wake-Up function is enable by setting LD-0A CR-E0 bit 6. The pre-determined keys data are stored in registers, and they can be access by an indirection method. At first, write their index address to LD-0A CR-E1, then access them by reading/writing LD-0A CR-E2. A zero data is written to the register means the comparison of this register will be ignored. The pre-programmed keys may be 1 to 5 keys with various combinations. If LD-0A CR-E0 bit 0 is set, the system will be waken up after any key struck.

8.6.2 Keyboard Password Wake-Up Function

To implement this function, the bit 7 of LD-0A CR-E0 must be set, and panel switch input is connected to PANSWIN# pin. Thus PANSWIN# is blocked to PANSWOUT#, by setting LD-0A CR-E0 properly and make only keyboard can Wake-Up the system with preset keys (password).

8.6.3 Mouse Wake-Up Function

The mouse Wake-Up function is activated by setting bit 5 of LD-0A CR-E0. If bit 1 of LD-0A CR-E0 is set, any movement or button clicking will make up the system. Otherwise, the mouse can Wake-Up the system only by clicking its button twice successively with the mouse unmoved. The bit 4 of LD-0A CR-E0 determines which button (left or right) to perform Wake-Up function.

9. GENERAL PURPOSE I/O

W83977EF/EG provides 14 Input/Output ports that can be individually configured to perform a simple basic I/O function or a pre-defined alternate function. Those 14 GP I/O ports are divided into three groups, the first group contains 8 ports, and the second group contains only 6 ports. Each port in first group corresponds to a configuration register in logical device 7, and the second group in logical device 8. Users can select those I/O ports functions by independently programming those configuration registers. Figure 8.1, 8.2, and 8.3 respectively show the GP I/O port's structure of logical device 7 and 8. Right after Power-on reset, those ports default to perform basic I/O functions.

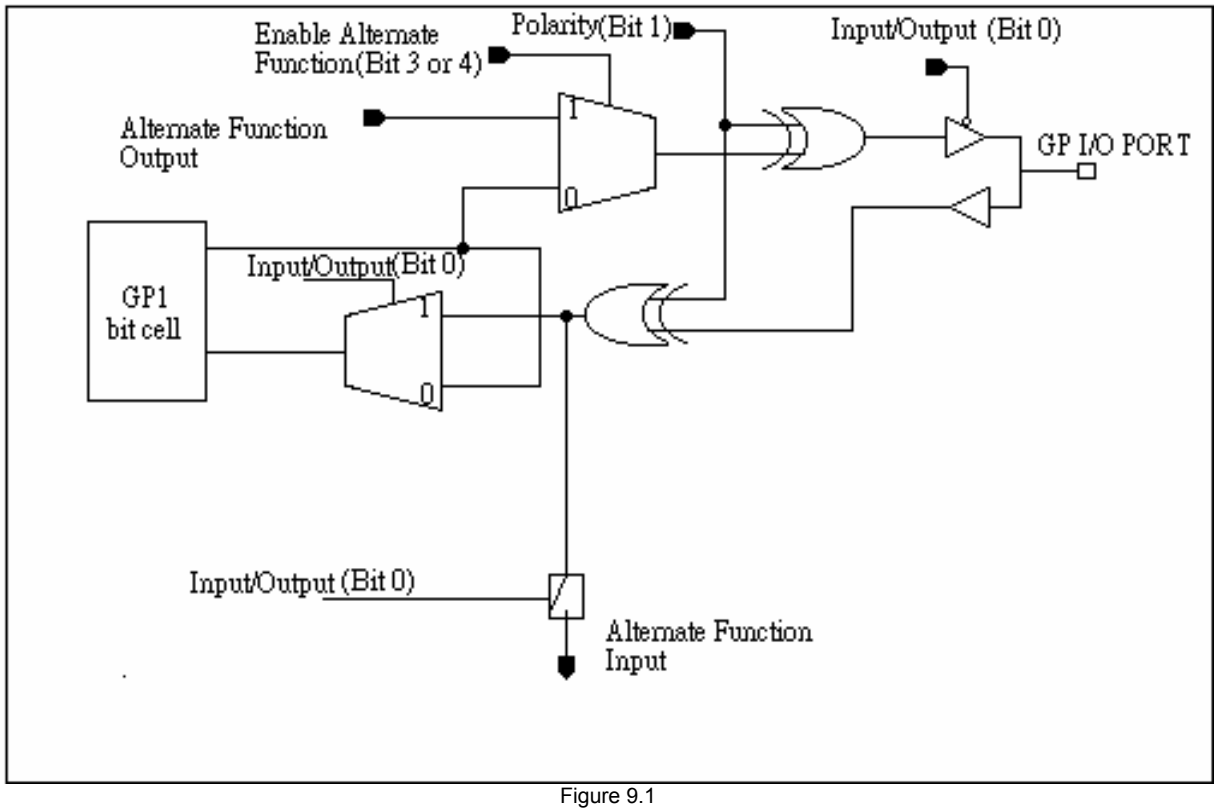

Figure 9.1

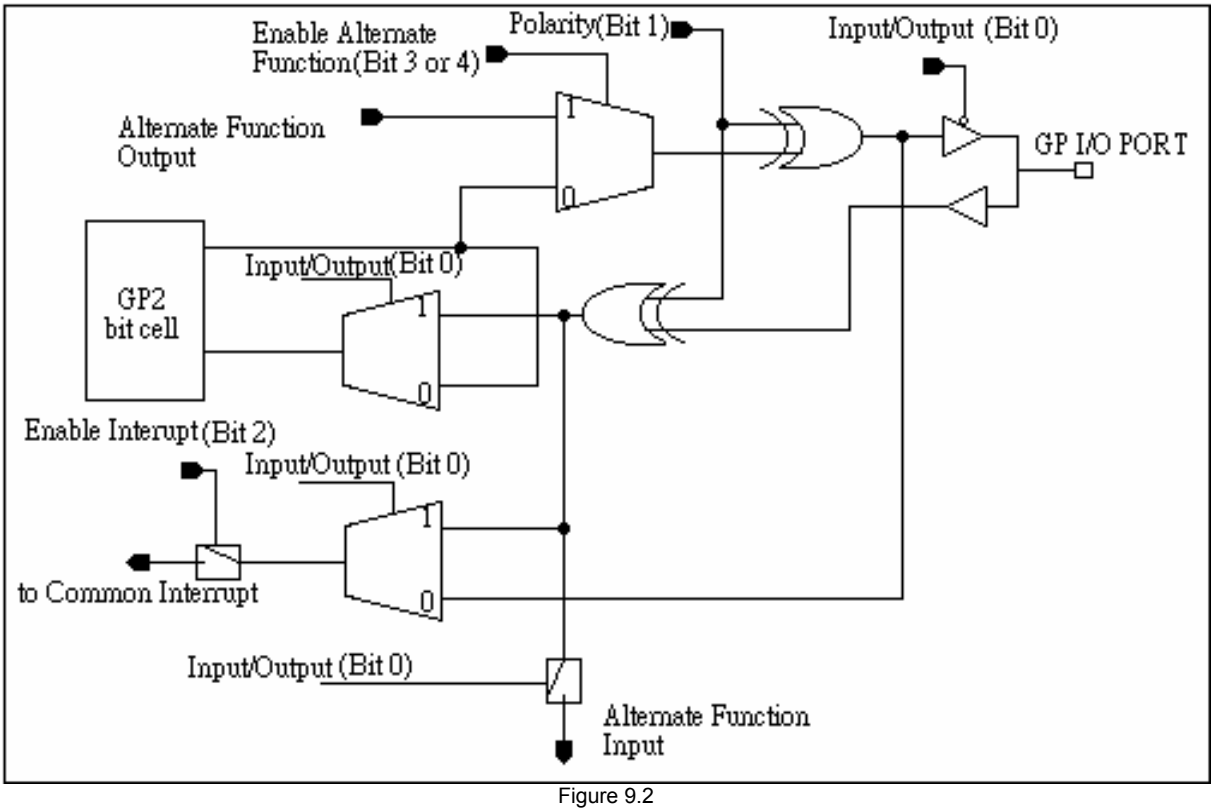

Figure 9.2

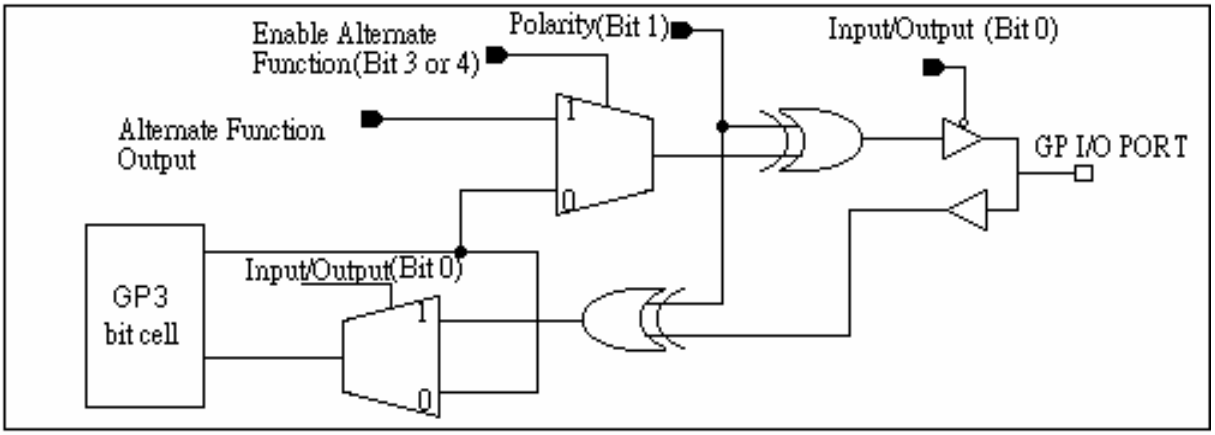

Figure 9.3

9.1 Basic I/O functions

The Basic I/O functions of W83977EF/EG provide several I/O operations including driving a logic value to output port, latching a logic value from input port, inverting the input/output logic value, and steering Common Interrupt (only available in the second group of the GP I/O port). Common Interrupt is the ORed function of all interrupt channels in the second group of the GP I/O ports, and it also connects to a 1ms debounce filter which can reject a noise of 1 ms pulse width or less. There are two 8-bit registers (GP1 and GP2) which are directly connected to those GP I/O ports. Each GP I/O port is represented as a bit in one of three 8-bit registers. Only 6 bits of GP2 are implemented. Table 7.1.1 shows their combinations of Basic I/O functions, and Table 7.1.2 shows the register bit assignments of GP1 and GP2.

Table 9.1.1

I/O BIT 0 = OUTPUT 1 = INPUT	ENABLE INT BIT 0 = DISABLE 1 = ENABLE	POLARITY BIT 0 = NON INVERT 1 = INVERT	BASIC I/O OPERATIONS
0	0	0	Basic non-inverting output
0	0	1	Basic inverting output
0	1	0	Non-inverted output bit value of GP2 drive to Common Interrupt
0	1	1	Inverted output bit value of GP2 drive to Common Interrupt
1	0	0	Basic non-inverting input
1	0	1	Basic inverting input
1	1	0	Non-inverted input drive to Common Interrupt
1	1	1	Inverted input drive to Common Interrupt

Table 9.1.2

GP I/O PORT ACCESSED REGISTER	REGISTER BIT ASSIGNMENT	GP I/O PORT
GP1	BIT 0	GP10
	BIT 1	GP11
	BIT 2	GP12
	BIT 3	GP13
	BIT 4	GP14
	BIT 5	GP15
	BIT 6	GP16
	BIT 7	GP17
GP2	BIT 0	GP20
	BIT 1	GP21
	BIT 2	GP22
	BIT 3	GP23
	BIT 4	GP24
	BIT 5	GP25

9.2 Alternate I/O Functions

W83977EF/EG provides several alternate functions which are scattered among the GP I/O ports. Table 9.2.1 shows their assignments. Polarity bit can also be set to alter their polarity.

Table 9.2.1

GP I/O PORT	ALTERNATE FUNCTION
GP10	Interrupt Steering
GP11	Interrupt Steering
GP12	Watch Dog Timer Output/IRRX input
GP13	Power LED output/IRTX output
GP14	General Purpose Address Decoder/Keyboard Inhibit(P17)
GP15	General Purpose Write Strobe/ 8042 P12
GP16	Watch Dog Timer Output
GP17	Power LED output
GP20	Keyboard Reset (8042 P20)
GP21	8042 P13
GP22	8042 P14
GP23	8042 P15
GP24	8042 P16
GP25	GATE A20 (8042 P21)

9.2.1 Interrupt Steering

GP10, and GP11can be programmed to map their own interrupt channels. The selection of IRQ channel can be done in configuration registers CR70 and CR72 of logical device 7 and logical device 9. Each interrupt channel also has its own 1 ms debounce filter that is used to reject any noise whose width is equal to or less than 1 ms.

9.2.2 Watch Dog Timer Output

Watch Dog Timer contains a one second/minute resolution down counter, CRF2 of Logical Device 8, and two watch Dog control registers, WDT_CTRL0 and WDT_CTRL1 of Logical Device 8. The down counter can be programmed within the range from 1 to 255 seconds/minutes. Writing any new non-zero value to CRF2 or reset signal coming from a Mouse interrupt or Keyboard interrupt (CRF2 also contains non-zero value) will cause the Watch Dog Timer to reload and start to count down from the new value. As the counter reaches zero, (1) Watch Dog Timer time-out occurs and the bit 0 of WDT_CTRL1 will be set to logic 1; (2) Watch Dog interrupt output is asserted if the interrupt is enable in CR72 of logical device 8; and (3) Power LED starts to toggle output if the bit 3 of WDT_CTRL0 is enabled. WDT_CTRL1 also can be accessed through GP2 I/O base address + 1.

9.2.3 Power LED

The Power LED function provides *1~1/8* Hertz rate toggle pulse output with 50 percent duty cycle. Table 7.2.2 shows how to enable Power LED.

Table 9.2.2

WDT_CTRL1 BIT[1]	WDT_CTRL0 BIT[3]	WDT_CTRL1 BIT[0]	POWER LED STATE
1	X	X	Toggle pulse
0	0	X	Continuous high or low *
0	1	0	Continuous high or low *
0	1	1	Toggle pulse

* **Note**: Continuous high or low depends on the polarity bit of GP13 or GP17 configuration registers.

9.2.4 General Purpose Address Decoder

General Purpose Address Decoder provides two address decode as AEN equal to logic 0. The address base is stored at CR62, CR63, CR64, and CR65 of logical device 7 for GP14 and GP15. The decoding range can be programmed to 1~8 byte boundary. The decoding output is normally active low. Users can alter its polarity through the polarity bit of the GP14 and GP15 configuration register.

10. PLUG AND PLAY CONFIGURATION

W83977EF/EG uses Compatible PNP protocol to access configuration registers for setting up different types of configurations. In W83977EF/EG, there are nine Logical Devices (from Logical Device 0 to Logical Device A with the exception of logical device 4 and 6 for compatibility) which correspond to nine individual functions: FDC (logical device 0), PRT (logical device 1), UART1 (logical device 2), UART2 (logical device 3), KBC (logical device 5), GPIO1 (logical device 7), GPIO2 (logical device 8), and ACPI ((logical device A). Each Logical Device has its own configuration registers (above CR30). Host can access those registers by writing an appropriate logical device number into logical device select register at CR7.

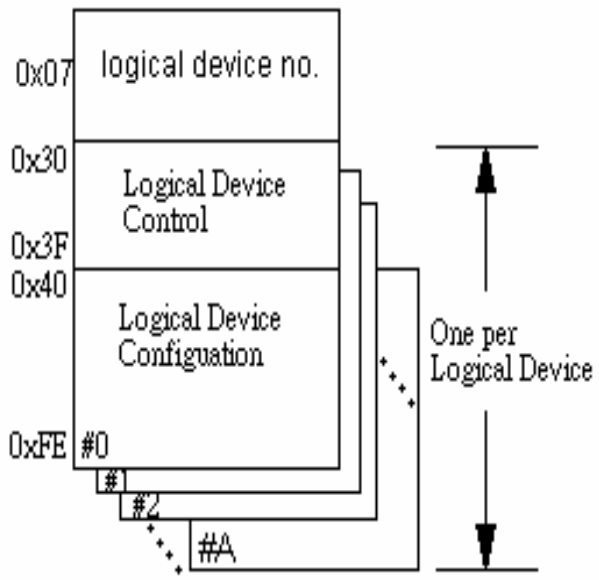

10.1 Compatible PnP

10.1.1 Extended Function Registers

In Compatible PnP, there are two ways to enter Extended Function and read or write the configuration registers. HEFRAS (CR26 bit 6) can be used to select one out of these two methods of entering the Extended Function mode as follows:

HEFRAS	ADDRESS AND VALUE
0	write 87h to the location 3F0h twice
1	write 87h to the location 370h twice

After Power-on reset, the value on $\overline{RTSA}$ (pin 43) is latched by HEFRAS of CR26. In Compatible PnP, a specific value (87h) must be written twice to the Extended Functions Enable Register (I/O port address 3F0h or 370h). Secondly, an index value (02h, 07h-FFh) must be written to the Extended Functions Index Register (I/O port address 3F0h or 370h same as Extended Functions Enable Register) to identify which configuration register is to be accessed. The designer can then access the desired configuration register through the Extended Functions Data Register (I/O port address 3F1h or 371h).

After programming of the configuration register is finished, an additional value (AAh) should be written to EFERs to exit the Extended Function mode to prevent unintentional access to those configuration registers. The designer can also set bit 5 of CR26 (LOCKREG) to high to protect the configuration registers against accidental accesses.

The configuration registers can be reset to their default or hardware settings only by a cold reset (pin MR = 1). A warm reset will not affect the configuration registers.

10.1.2 Extended Functions Enable Registers (EFERs)

After a power-on reset, W83977EF/EG enters the default operating mode. Before W83977EF/EG enters the extended function mode, a specific value must be programmed into the Extended Function Enable Register (EFER) so that the extended function register can be accessed. The Extended Function Enable Registers are write-only registers. On a PC/AT system, their port addresses are 3F0h or 370h (as described in previous section).

10.1.3 Extended Function Index Registers (EFIRs), Extended Function Data Registers(EFDRs)

After the extended function mode is entered, the Extended Function Index Register (EFIR) must be loaded with an index value (02h, 07h-FEh) to access Configuration Register 0 (CR0), Configuration Register 7 (CR07) to Configuration Register FE (CRFE), and so forth through the Extended Function Data Register (EFDR). The EFIRs are write-only registers with port address 3F0h or 370h (as described in section 8.1.1) on PC/AT systems; the EFDRs are read/write registers with port address 3F1h or 371h (as described in section 8.1.1) on PC/AT systems.

10.2 Configuration Sequence

To program W83977EF/EG configuration registers, the following configuration sequence must be followed:

(1). Enter the extended function mode

(2). Configure the configuration registers

(3). Exit the extended function mode

10.2.1 Enter the extended function mode

To place the chip into the extended function mode, two successive wrtites of 0x87 must be applied to Extended Function Enable Registers(EFERs, i.e. 3F0h or 370h).

10.2.2 Configurate the configuration registers

The chip selects the logical device and activates the desired logical devices through Extended Function Index Register(EFIR) and Extended Function Data Register(EFDR). EFIR is located at the same address as EFER, and EFDR is located at address (EFIR+1).

First, write the Logical Device Number (i.e.,0x07) to the EFIR and then write the number of the desired logical device to the EFDR. If accessing the Chip(Global) Control Registers, this step is not required.

Secondly, write the address of the desired configuration register within the logical device to the EFIR and then write (or read) the desired configuration register through EFDR.

10.2.3 Exit the extended function mode

To exit the extended function mode, one write of 0xAA to EFER is required. Once the chip exits the extended function mode, it is in the normal running mode and is ready to enter the configuration mode.

10.2.4 Software programming example

The following example is written in Intel 8086 assembly language. It assumes that the EFER is located at 3F0h, so EFIR is located at 3F0h and EFDR is located at 3F1h. If HEFRAS (CR26 bit 6) is set, 3F0h can be directly replaced by 370h and 3F1h replaced by 371h.

```
;-----------------------------------------------------------------------------
; Enter the extended function mode ,interruptible double-write    |
;-----------------------------------------------------------------------------
MOV     DX,3F0H
MOV     AL,87H
OUT     DX,AL
OUT     DX,AL
;-----------------------------------------------------------------------
; Configurate logical device 1, configuration register CRF0   |
;-----------------------------------------------------------------------
MOV     DX,3F0H
MOV     AL,07H
OUT     DX,AL           ; point to Logical Device Number Reg.
MOV     DX,3F1H
MOV     AL,01H
OUT     DX,AL           ; select logical device 1
;
MOV     DX,3F0H
MOV     AL,F0H
OUT     DX,AL           ; select CRF0
MOV     DX,3F1H
MOV     AL,3CH
OUT     DX,AL           ; update CRF0 with value 3CH
;-----------------------------------------
; Exit extended function mode     |
;-----------------------------------------
MOV     DX,3F0H
MOV     AL,AAH
OUT     DX,AL
```

11. ACPI REGISTERS FEATURES

W83977EF/EG supports both ACPI and legacy power managements. The switch logic of the power management block generates an SMI# interrupt in the legacy mode and an SCI# interrupt in the ACPI mode. The new ACPI feature routes SMI#/SCI# logic output either to SMI# or toSCI#. The SMI#/SCI# logic routes to SMI# only when both SCI_EN = 0 and SMISCI_OE = 1.Similarly, the SMI#/SCI# logicroutes to SCI# only when both SCI_EN = 1 and SMISCI_OE = 1.

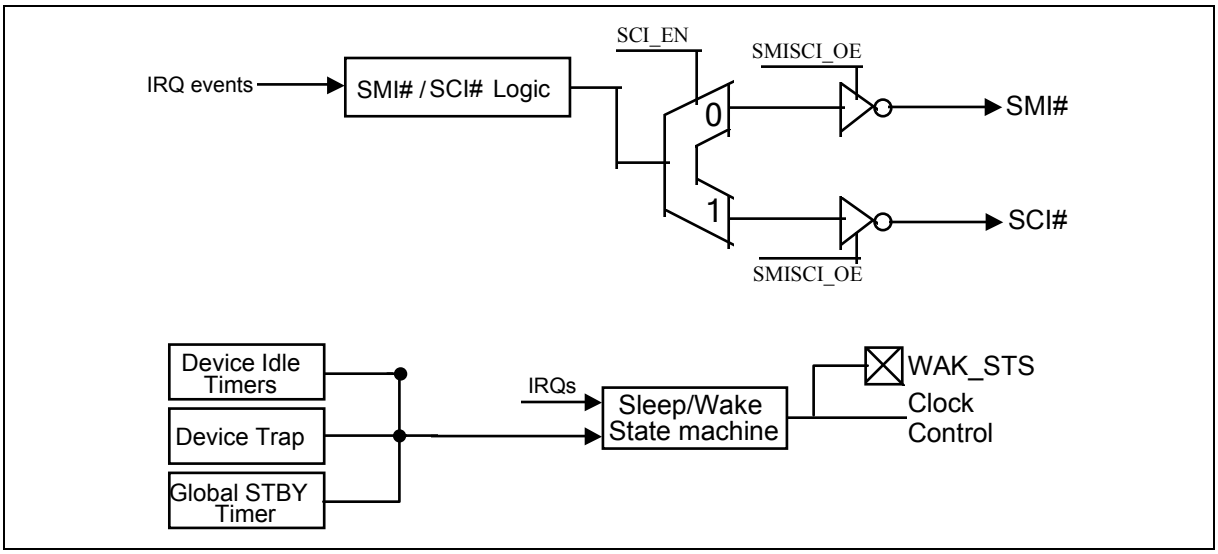

12. CONFIGURATION REGISTER

12.1 Chip (Global) Control Register

CR02 (Default 0x00)

Bit 7 - 1: Reserved.

Bit 0: SWRST --> Soft Reset.

CR07

Bit 7 - 0: LDNB7 - LDNB0 --> Logical Device Number Bit 7 - 0

CR20

Bit 7 - 0: DEVIDB7 - DEBIDB0 --> Device ID Bit 7 - Bit 0 = 0x52 (read only).

CR21

Bit 7 - 0: DEVREVB7 - DEBREVB0 --> Device Rev Bit 7 - Bit 0 = 0xFx (read only).

CR22 (Default 0xff)

Bit 7 - 6: Reserved.

Bit 5: URBPWD

= 0 Power down

= 1 No Power down

Bit 4: URAPWD

= 0 Power down

= 1 No Power down

Bit 3: PRTPWD

= 0 Power down

= 1 No Power down

Bit 2, 1: Reserved.

Bit 0: FDCPWD

= 0 Power down

= 1 No Power down

CR23 (Default 0xFE)

Bit 7 - 1: Reserved.

Bit 0: IPD (Immediate Power Down). When set to 1, it will put the whole chip into power down mode immediately.

CR24 (Default 0b1s000s0s)

Bit 7: EN16SA

= 0 12 bit Address Qualification

= 1 16 bit Address Qualification

Bit 6: EN48

= 0 The clock input on Pin 1 should be 24 Mhz.

= 1 The clock input on Pin 1 should be 48 Mhz.

The corresponding power-on setting pin is SOUTB (pin 53).

Bit 5 - 3: Reserved.

Bit 2: ENKBC

= 0 KBC is disabled after hardware reset.

= 1 KBC is enabled after hardware reset.

This bit is read only, and set/reset by power-on setting pin. The corresponding power-on setting pin is SOUTA (pin 46).

Bit 1: Reserved

Bit 0: PNPCSV#

= 0 The Compatible PnP address select registers have default values.

= 1 The Compatible PnP address select registers have no default value.

When trying to make a change to this bit, new value of PNPCSV# must be complementary to the old one to make an effective change. For example, the user must set PNPCSV# to 0 first and then reset it to 1 to reset these PnP registers if the present value of PNPCSV# is 1. The corresponding power-on setting pin is NDTRA (pin 44).

CR25 (Default 0x00)

Bit 7 - 6: Reserved

Bit 5: URBTRI

Bit 4: URATRI

Bit 3: PRTTRI

Bit 2 - 1 : Reserved

Bit 0: FDCTRI.

CR26 (Default 0b0s000000)

Bit 7: SEL4FDD

= 0 Select two FDD mode.

= 1 Select four FDD mode.

Bit 6: HEFRAS

These two bits define how to enable Configuration mode. The corresponding power-on setting pin is NRTSA (pin 43).

HEFRAS Address and Value

= 0 Write 87h to the location 3F0h twice.

= 1 Write 87h to the location 370h twice.

Bit 5: LOCKREG

= 0 Enable R/W Configuration Registers.

= 1 Disable R/W Configuration Registers.

Bit 4: Reserved.

Bit 3: DSFDLGRQ

= 0 Enable FDC legacy mode on IRQ and DRQ selection, then DO register bit 3 is effective on selecting IRQ

= 1 Disable FDC legacy mode on IRQ and DRQ selection, then DO register bit 3 is not effective on selecting IRQ

Bit 2: DSPRLGRQ

= 0 Enable PRT legacy mode on IRQ and DRQ selection, then DCR bit 4 is effective on selecting IRQ

= 1 Disable PRT legacy mode on IRQ and DRQ selection, then DCR bit 4 is not effective on selecting IRQ

Bit 1: DSUALGRQ

= 0 Enable UART A legacy mode IRQ selecting, then MCR bit 3 is effective on selecting IRQ

= 1 Disable UART A legacy mode IRQ selecting, then MCR bit 3 is not effective on selecting IRQ

Bit 0: DSUBLGRQ

= 0 Enable UART B legacy mode IRQ selecting, then MCR bit 3 is effective on selecting IRQ

= 1 Disable UART B legacy mode IRQ selecting, then MCR bit 3 is not effective on selecting IRQ

CR28 (Default 0x00)

Bit 7 - 5: Reserved.

Bit 4: IRQ Sharing selection.

= 0 Disable IRQ Sharing

= 1 Enable IRQ Sharing

Bit 3:Reserved

Bit 2 - 0: PRTMODS2 - PRTMODS0

= 0xx Parallel Port Mode

= 100 Reserved

= 101 External FDC Mode

= 110 Reserved

= 111 External two FDC Mode

CR2A (Default 0x00)

Bit 7: PIN57S

= 0 KBRST

= 1 GP12

Bit 6: PIN56S

= 0 GA20

= 1 GP11

Bit 5 - 4: PIN40S1, PIN40S0

= 00 CIRRX

= 01 GP24

= 10 8042 P13

= 11 Reserved

Bit 3 - 2: PIN39S1, PIN39S0

= 00 SUSCIN#

= 01 Reserved

= 10 GP25

= 11 Reserved

Bit 1 - 0: PIN3S1, PIN3S0

= 00 DRVDEN1

= 01 GP10

= 10 8042 P12

= 11 SCI#

CR2B (Default 0x00)

Bit 7 - 6: PIN73S1, PIN73S0

= 00 PANSWIN#

= 01 GP23

= 10 Reserved

= 11 Reserved

Bit 5: PIN72S

= 0 PANSWOUT#

= 1 GP22

Bit 4 - 3: PIN70S1, PIN70S0

= 00 SMI#

= 01 GP21

= 10 8042 P16

= 11 Reserved

Bit 2 - 1: PIN69S1, PIN69S0

= 00 PWRCTL#

= 01 GP20

= 10 Reserved

= 11 Reserved

Bit 0: PIN58S

= 0 KBLOCK

= 1 GP13

CR2C (Default 0x00)

Bit 7 - 6: PIN121S1, PIN121S0

= 00 DRQ0

= 01 GP17

= 10 8042 P14

= 11 SCI#

Bit 5 - 4: PIN119S1, PIN119S0

= 00 NDACK0

= 01 GP16

= 10 8042 P15

= 11 Reserved

Bit 3 - 2: PIN104S1, PIN104S0

= 00 IRQ15

= 01 GP15

= 10 WDTO

= 11 Reserved

Bit 1 - 0: PIN103S1, PIN103S0

= 00 IRQ14

= 01 GP14

= 10 PLEDO

= 11 Reserved

CR2D (Default 0x00)

Test Modes: Reserved for Winbond.

CR2E (Default 0x00)

Test Modes: Reserved for Winbond.

CR2F (Default 0x00)

Test Modes: Reserved for Winbond.

12.2 Logical Device 0 (FDC)

CR30 (Default 0x01 if PNPCSV# = 0 during POR, default 0x00 otherwise)

Bit 7 - 1: Reserved.

Bit 0: = 1 Activates the logical device.

= 0 Logical device is inactive.

CR60, CR 61 (Default 0x03, 0xf0 if PNPCSV# = 0 during POR, default 0x00, 0x00 otherwise)

These two registers select FDC I/O base address [0x100:0xFF8] on 8 byte boundary.

CR70 (Default 0x06 if PNPCSV# = 0 during POR, default 0x00 otherwise)

Bit 7 - 4: Reserved.

Bit 3 - 0: These bits select IRQ resource for FDC.

CR74 (Default 0x02 if PNPCSV# = 0 during POR, default 0x04 otherwise)

Bit 7 - 3: Reserved.

Bit 2 - 0: These bits select DRQ resource for FDC.

= 0x00 DMA0

= 0x01 DMA1

= 0x02 DMA2

= 0x03 DMA3

= 0x04 - 0x07 No DMA active

CRF0 (Default 0x0E)

FDD Mode Register

Bit 7: FIPURDWN

This bit controls the internal pull-up resistors of the FDC input pins RDATA, INDEX, TRAK0, DSKCHG, and WP.

= 0 The internal pull-up resistors of FDC are turned on.(Default)

= 1 The internal pull-up resistors of FDC are turned off.

Bit 6: INTVERTZ

This bit determines the polarity of all FDD interface signals.

= 0 FDD interface signals are active low.

= 1 FDD interface signals are active high.

Bit 5: DRV2EN (PS2 mode only)

When this bit is a logic 0, this indicates that a second drive is installed and is reflected in status register A.

Bit 4: Swap Drive 0, 1 Mode

= 0 No Swap (Default)

= 1 Drive and Motor sel 0 and 1 are swapped.

Bit 3 - 2 Interface Mode

= 11 AT Mode (Default)

= 10 (Reserved)

= 01 PS/2

= 00 Model 30

Bit 1: FDC DMA Mode

= 0 Burst Mode is enabled

= 1 Non-Burst Mode (Default)

Bit 0: Floppy Mode

= 0 Normal Floppy Mode (Default)

= 1 Enhanced 3-mode FDD

CRF1 (Default 0x00)

Bit 7 - 6: Boot Floppy

= 00 FDD A

= 01 FDD B

= 10 FDD C

= 11 FDD D

Bit 5, 4: Media ID1, Media ID0. These bits will be reflected on FDC's Tape Drive Register bit 7, 6.

Bit 3 - 2: Density Select

= 00 Normal (Default)

= 01 Normal

= 10 1 (Forced to logic 1)

= 11 0 (Forced to logic 0)

Bit 1: DISFDDWR

= 0 Enable FDD write.

= 1 Disable FDD write(forces pins WE, WD stay high).

Bit 0: SWWP

= 0 Normal, use WP to determine whether the FDD is write protected or not.

= 1 FDD is always write-protected.

CRF2 (Default 0xFF)

Bit 7 - 6: FDD D Drive Type

Bit 5 - 4: FDD C Drive Type

Bit 3 - 2: FDD B Drive Type

Bit 1:0: FDD A Drive Type

When FDD is in enhanced 3-mode(CRF0.bit0=1),these bits determine SELDEN value in TABLE A of CRF4 and CRF5 as follows.

DTYPE1	DPYTE0	DRATE1	DRATE0	SELDEN
0	0	1	1	1
0	0	0	0	1
0	0	0	1	0
0	0	1	0	0
0	1	X	X	0
1	0	X	X	1
1	1	0	1	0

Note: X means don't care.

CRF4 (Default 0x00)

FDD0 Selection:

Bit 7: Reserved.

Bit 6: Precomp. Disable.

= 1 Disable FDC Precompensation.

= 0 Enable FDC Precompensation.

Bit 5: Reserved.

Bit 4 - 3: DRTS1, DRTS0: Data Rate Table select (Refer to TABLE A).

= 00 Select Regular drives and 2.88 format

= 01 Specifical application

= 10 2 Meg Tape

= 11 Reserved

Bit 2: Reserved.

Bit 1:0: DMOD0, DMOD1 : Drive Model select (Refer to TABLE B).

CRF5 (Default 0x00)

FDD1 Selection: Same as FDD0 of CRF4.

TABLE A

DRIVE RATE TABLE SELECT		DATA RATE		SELECTED DATA RATE		SELDEN
DRTS1	**DRTS0**	**DRATE1**	**DRATE0**	**MFM**	**FM**	**CRF0 BIT 0=0**
0	0	1	1	1Meg	---	1
		0	0	500K	250K	1
		0	1	300K	150K	0
		1	0	250K	125K	0
0	1	1	1	1Meg	---	1
		0	0	500K	250K	1
		0	1	500K	250K	0
		1	0	250K	125K	0
1	0	1	1	1Meg	---	1
		0	0	500K	250K	1
		0	1	2Meg	---	0
		1	0	250K	125K	0

Note:Refer to CRF2 for SELDEN value in the cases when CRF0, bit0=1.

TABLE B

DMOD0	DMOD1	DRVDEN0(PIN 2)	DRVDEN1(PIN 3)	DRIVE TYPE
0	0	SELDEN	DRATE0	4/2/1 MB 3.5”“ 2/1 MB 5.25” 2/1.6/1 MB 3.5” (3-MODE)
0	1	DRATE1	DRATE0	
1	0	$\overline{\text{SELDEN}}$	DRATE0	
1	1	DRATE0	DRATE1	

12.3 Logical Device 1 (Parallel Port)

CR30 (Default 0x01 if PNPCSV# = 0 during POR, default 0x00 otherwise)

Bit 7 - 1: Reserved.

Bit 0:

= 1 Activates the logical device.

= 0 Logical device is inactive.

CR60, CR 61 (Default 0x03, 0x78 if PNPCSV# = 0 during POR, default 0x00, 0x00 otherwise)

These two registers select Parallel Port I/O base address.

[0x100:0xFFC] on 4 byte boundary (EPP not supported) or

[0x100:0xFF8] on 8 byte boundary (all modes supported, EPP is only available when the base address is on 8 byte boundary).

CR70 (Default 0x07 if PNPCSV# = 0 during POR, default 0x00 otherwise)

Bit 7 - 4: Reserved.

Bit [3:0]: These bits select IRQ resource for Parallel Port.

CR74 (Default 0x04)

Bit 7 - 3: Reserved.

Bit 2 - 0: These bits select DRQ resource for Parallel Port.

0x00=DMA0

0x01=DMA1

0x02=DMA2

0x03=DMA3

0x04 - 0x07= No DMA active

CRF0 (Default 0x3F)

Bit 7: PP Interrupt Type:

Not valid when the parallel port is in the printer Mode (100) or the standard & Bi-directional Mode (000).

= 1 Pulsed Low, released to high-Z .

= 0 IRQ follows nACK when parallel port in EPP Mode or [Printer, SPP, EPP] under ECP.

Bit [6:3]: ECP FIFO Threshold.

Bit 2 - 0 Parallel Port Mode

= 100 Printer Mode (Default)
= 000 Standard and Bi-direction (SPP) mode
= 001 EPP - 1.9 and SPP mode
= 101 EPP - 1.7 and SPP mode
= 010 ECP mode
= 011 ECP and EPP - 1.9 mode
= 111 ECP and EPP - 1.7 mode.

12.4 Logical Device 2 (UART A)¢)

CR30 (Default 0x01 if PNPCSV# = 0 during POR, default 0x00 otherwise)

Bit 7 - 1: Reserved.

Bit 0:

= 1 Activates the logical device.

= 0 Logical device is inactive.

CR60, CR 61 (Default 0x03, 0xF8 if PNPCSV# = 0 during POR, default 0x00, 0x00 otherwise)

These two registers select Serial Port 1 I/O base address [0x100:0xFF8] on 8 byte boundary.

CR70 (Default 0x04 if PNPCSV# = 0 during POR, default 0x00 otherwise)

Bit 7 - 4: Reserved.

Bit 3 - 0: These bits select IRQ resource for Serial Port 1.

CRF0 (Default 0x00)

Bit 7 - 2: Reserved.

Bit 1 - 0: SUACLKB1, SUACLKB0

= 00 UART A clock source is 1.8462 Mhz (24MHz/13)

= 01 UART A clock source is 2 Mhz (24MHz/12)

= 10 UART A clock source is 24 Mhz (24MHz/1)

= 11 UART A clock source is 14.769 Mhz (24MHz/1.625)

12.5 Logical Device 3 (UART B)

CR30 (Default 0x01 if PNPCSV# = 0 during POR, default 0x00 otherwise)

Bit 7 - 1: Reserved.

Bit 0:

= 1 Activates the logical device.

= 0 Logical device is inactive.

CR60, CR 61 (Default 0x02, 0xF8 if PNPCSV# = 0 during POR, default 0x00, 0x00 otherwise)

These two registers select Serial Port 2 I/O base address [0x100:0xFF8] on 8 byte boundary.

CR70 (Default 0x03 if PNPCSV# = 0 during POR, default 0x00 otherwise)

Bit 7 - 4: Reserved.

Bit [3:0]: These bits select IRQ resource for Serial Port 2.

CRF0 (Default 0x00)

Bit 7 - 4: Reserved.

Bit 3: RXW4C

= 0 No reception delay when SIR is changed from TX mode to RX mode.

= 1 Reception delays 4 characters-time (40 bit-time) when SIR is changed from TX mode to RX mode.

Bit 2: TXW4C

= 0 No transmission delay when SIR is changed from RX mode to TX mode.

= 1 Transmission delays 4 characters-time (40 bit-time) when SIR is changed from RX mode to TX mode.

Bit 1 - 0: SUBCLKB1, SUBCLKB0

= 00 UART B clock source is 1.8462 Mhz (24MHz/13)

= 01 UART B clock source is 2 Mhz (24MHz/12)

= 10 UART B clock source is 24 Mhz (24MHz/1)

= 11 UART B clock source is 14.769 Mhz (24MHz/1.625)

CRF1 (Default 0x00)

Bit 7: Reserved.

Bit 6: IRLOCSEL. IR I/O pins' location select.

= 0 Through SINB/SOUTB.

= 1 Through IRRX/IRTX.

Bit 5: IRMODE2. IR function mode selection bit 2.

Bit 4: IRMODE1. IR function mode selection bit 1.

Bit 3: IRMODE0. IR function mode selection bit 0.

IR MODE	IR FUNCTION	IRTX	IRRX
00X	Disable	tri-state	high
010*	IrDA	Active pulse 1.6 μS	Demodulation into SINB/IRRX
011*	IrDA	Active pulse 3/16 bit time	Demodulation into SINB/IRRX
100	ASK-IR	Inverting IRTX/SOUTB pin	routed to SINB/IRRX
101	ASK-IR	Inverting IRTX/SOUTB & 500 KHZ clock	routed to SINB/IRRX
110	ASK-IR	Inverting IRTX/SOUTB	Demodulation into SINB/IRRX
111*	ASK-IR	Inverting IRTX/SOUTB & 500 KHZ clock	Demodulation into SINB/IRRX

Note: The notation is normal mode in the IR function.

Bit 2: HDUPLX. IR half/full duplex function select.

= 0 The IR function is Full Duplex.

= 1 The IR function is Half Duplex.

Bit 1: TX2INV.

= 0 the SOUTB pin of UART B function or IRTX pin of IR function in normal condition.

= 1 inverse the SOUTB pin of UART B function or IRTX pin of IR function.

Bit 0: RX2INV.

= 0 the SINB pin of UART B function or IRRX pin of IR function in normal condition.

= 1 inverse the SINB pin of UART B function or IRRX pin of IR function

12.6 Logical Device 5 (KBC)

CR30 (Default 0x01 if PENKBC= 1 during POR, default 0x00 otherwise)

Bit 7 - 1: Reserved.

Bit 0:

= 1 Activates the logical device.

= 0 Logical device is inactive.

CR60, CR 61 (Default 0x00, 0x60 if PENKBC= 1 during POR, default 0x00 otherwise)

These two registers select the first KBC I/O base address [0x100:0xFFF] on 1 byte boundary.

CR62, CR 63 (Default 0x00, 0x64 if PENKBC= 1 during POR, default 0x00 otherwise)

These two registers select the second KBC I/O base address [0x100:0xFFF] on 1 byte boundary.

CR70 (Default 0x01 if PENKBC= 1 during POR, default 0x00 otherwise)

Bit 7 - 4: Reserved.

Bit [3:0]: These bits select IRQ resource for KINT (keyboard).

CR72 (Default 0x0C if PENKBC= 1 during POR, default 0x00 otherwise)

Bit 7 - 4: Reserved.

Bit [3:0]: These bits select IRQ resource for MINT (PS2 Mouse)

CRF0 (Default 0x83)

Bit 7 - 6: KBC clock rate selection

= 00 Select 6MHz as KBC clock input.

= 01 Select 8MHz as KBC clock input.

= 10 Select 12Mhz as KBC clock input.

= 11 Select 16Mhz as KBC clock input.

Bit 5 - 3: Reserved.

Bit 2: = 0 Port 92 disable.

= 1 Port 92 enable.

Bit 1: = 0 Gate20 software control.

= 1 Gate20 hardware speed up.

Bit 0: = 0 KBRST software control.

= 1 KBRST hardware speed up.

12.7 Logical Device 7 (GP I/O Port I)

CR30 (Default 0x00)

Bit 7 - 1: Reserved.

Bit 0: = 1 Activates the logical device.

= 0 Logical device is inactive.

CR60, CR 61 (Default 0x00, 0x00)

These two registers select GP1 I/O base address [0x100:0xFFF] on 1 byte boundary.

CR62, CR 63 (Default 0x00, 0x00)

These two registers select GP14 alternate function Primary I/O base address [0x100:0xFFx] on 1~8 byte boundary; They are available as you setting GP14 to be an alternate function (General Purpose Address Decode).

CR64, CR 65 (Default 0x00, 0x00)

These two registers select GP15 alternate function Primary I/O base address [0x100:0xFFx] on 1~8 byte boundary; They are available as you setting GP15 to be an alternate function (General Purpose Address Decode).

CR70 (Default 0x00)

Bit 7 - 4: Reserved.

Bit 3 - 0: These bits select IRQ resource for GP10 as you setting GP10 to be an alternate function (Interrupt Steering).

CR72 (Default 0x00)

Bit 7 - 4: Reserved.

Bit 3 - 0: These bits select IRQ resource for GP11 as you setting GP11 to be an alternate function (Interrupt Steering).

CRE0 (GP10, Default 0x01)

Bit 7 - 5: Reserved.

Bit 4: IRQ Filter Select

= 1 Debounce Filter Enabled

= 0 Debounce Filter Bypassed

Bit 3: Select Function.

= 1 Select Alternate Function: Interrupt Steering.

= 0 Select Basic I/O Function.

Bit 2: Reserved.

Bit 1: Polarity.

= 1 Invert.

= 0 No Invert.

Bit 0: In/Out selection.

= 1 Input.

= 0 Output.

CRE1 (GP11, Default 0x01)

Bit 7 - 5: Reserved.

Bit 4: IRQ Filter Select

= 1 Debounce Filter Enabled

= 0 Debounce Filter Bypassed

Bit 3: Select Function.

= 1 Select Alternate Function: Interrupt Steering.

= 0 Select Basic I/O Function.

Bit 2: Reserved.

Bit 1: Polarity.

= 1 Invert.

= 0 No Invert.

Bit 0: In/Out selection.

= 1 Input.

= 0 Output.

CRE2 (GP12, Default 0x01)

Bit 7 - 5: Reserved.

Bit 4 - 3: Select Function.

= 00 Select Basic I/O function.

= 01 Select 1st alternate function: Watch Dog Timer Output.

= 10 Reserved

= 11 Reserved

Bit 2: Reserved.

Bit 1: Polarity: 1: Invert, 0: No Invert

Bit 0: In/Out: 1: Input, 0: Output

CRE3 (GP13, Default 0x01)

Bit 7 - 5: Reserved.

Bit 4 - 3: Select Function.

= 00 Select Basic I/O function.

= 01 Select 1st alternate function: Power LED output.

= 10 Reserved

= 11 Reserved

Bit 2: Reserved.

Bit 1: Polarity: 1: Invert, 0: No Invert

Bit 0: In/Out: 1: Input, 0: Output

CRE4 (GP14, Default 0x01)

Bit 7 - 6:

= 00 Address decoder is 1-Byte boundary.

= 01 Address decoder is 2-Byte boundary.
= 10 Address decoder is 4-Byte boundary.
= 11 Address decoder is 8-Byte boundary.

Bit 5: Reserved.

Bit 4 - 3: Select Function.

= 00 Select Basic I/O function.
= 01 Select 1st alternate function: General Purpose Address Decoder(Active Low when Bit 1 = 0, Decode two byte address).
= 10 Select 2nd alternate function: Keyboard Inhibit(P17).
= 11 Reserved

Bit 2: Reserved.

Bit 1: Polarity: 1: Invert, 0: No Invert

Bit 0: In/Out: 1: Input, 0: Output

CRE5 (GP15, Default 0x01)

Bit 7 - 6:

= 00 Address decoder is 1-Byte boundary.
= 01 Address decoder is 2-Byte boundary.
= 10 Address decoder is 4-Byte boundary.
= 11 Address decoder is 8-Byte boundary.

Bit 5: Reserved.

Bit 4 - 3: Select Function.

= 00 Select Basic I/O function.
= 01 General Purpose Write Strobe(Active Low when Bit 1 = 0).
= 10 8042 P12.
= 11 Reserved

Bit 2: Reserved.

Bit 1: Polarity: 1: Invert, 0: No Invert

Bit 0: In/Out: 1: Input, 0: Output

CRE6 (GP16, Default 0x01)

Bit 7 - 5: Reserved.

Bit 4 - 3: Select Function.

= 00 Select Basic I/O function.
= 01 Select 1st alternate function: Watch Dog Timer Output.
= 1x Reserved

Bit 2: Reserved.

Bit 1: Polarity: 1: Invert, 0: No Invert

Bit 0: In/Out: 1: Input, 0: Output

CRE7 (GP17, Default 0x01)

Bit 7 - 4: Reserved.

Bit 4 - 3: Select Function.

= 00 Select Basic I/O function.

= 01 Select 1st alternate function: Power LED output. Please refer to TABLE C

= 1x Reserved

Bit 2: Reserved.

Bit 1: Polarity: 1: Invert, 0: No Invert

Bit 0: In/Out: 1: Input, 0: Output

TABLE C

WDT_CTRL1* BIT[1]*	WDT_CTRL0* BIT[3]	WDT_CTRL1 BIT[0]	POWER LED STATE
1	X	X	1 Hertz Toggle pulse
0	0	X	Continuous high or low*
0	1	0	Continuous high or low*
0	1	1	1 Hertz Toggle pulse

***Note**: 1). Regarding to the contents of WDT_CTR1 and WDT_CTRL0, please refer to CRF3 and CRF4 in Logic Device 8.

2). Continuous high or low depends on the polarity bit of GP13 or GP17 configure registers.

CRF1 (Default 0x00)

General Purpose Read/Write Enable*

Bit 7 - 2: Reserved

Bit 1:

= 1 Enable GP15 General Purpose Address Decode

= 0 Disable GP15 General Purpose Address Decode

Bit 0:

= 1 Enable GP14 General Purpose Address Decode

= 0 Disable GP14 General Purpose Address Decode

***Note**: If the logical device's activate bit is not set then bit 0 and 1 have no effect.

12.8 Logical Device 8 (GP I/O Port II)

CR30 (Default 0x00)

Bit 7 - 1: Reserved.

Bit 0: = 1 Activates the logical device.

= 0 Logical device is inactive.

CR60, CR 61 (Default 0x00, 0x00)

These two registers select GP2 & Watch Dog I/O base address [0x100:0xFFE] on 2 byte boundary. I/O base address + 1: Watch Dog I/O base address.

CR70 (Default 0x00)

Bit 7 - 4: Reserved.

Bit 3 - 0: These bits select IRQ resource for Common IRQ of GP20~GP26 at Logic Device 8.

CR72 (Default 0x00)

Bit 7 - 4: Reserved.

Bit 3 - 0: These bits select IRQ resource for Watch Dog.

CRE8 (GP20, Default 0x01)

Bit 7 - 5: Reserved.

Bit 4 - 3: Select Function.

= 00 Select basic I/O function

= 01 Reserved

= 10 Select alternate function: Keyboard Reset (connected to KBC P20)

= 11 Reserved

Bit 2: Int En

= 1 Enable Common IRQ

= 0 Disable Common IRQ

Bit 1: Polarity: 1: Invert, 0: No Invert

Bit 0: In/Out: 1: Input, 0: Output

CRE9 (GP21, Default 0x01)

Bit 7 - 5: Reserved

Bit 4 - 3: Select Function.

= 00 Select Basic I/O function

= 01 Reserved

= 10 Select 2nd alternate function: Keyboard P13 I/O

= 11 Reserved

Bit 2: Int En

= 1 Enable Common IRQ

= 0 Disable Common IRQ

Bit 1: Polarity: 1: Invert, 0: No Invert

Bit 0: In/Out: 1: Input, 0: Output

CREA (GP22, Default 0x01)

Bit 7 - 5: Reserved.

Bit 4 - 3: Select Function.

= 00 Select Basic I/O function.

= 01 Reserved

= 10 Select 2nd alternate function: Keyboard P14 I/O.

= 11 Reserved

Bit 2: Int En

= 1 Enable Common IRQ

= 0 Disable Common IRQ

Bit 1: Polarity: 1: Invert, 0: No Invert

Bit 0: In/Out: 1: Input, 0: Output

CREB (GP23, Default 0x01)

Bit 7 - 5: Reserved.

Bit 4 - 3: Select Function.

= 00 Select Basic I/O function

= 01 Reserved

= 10 Select 2nd alternate function: Keyboard P15 I/O

= 11 Reserved

Bit 2: Int En

= 1 Enable Common IRQ

= 0 Disable Common IRQ

Bit 1: Polarity: 1: Invert, 0: No Invert

Bit 0: In/Out: 1: Input, 0: Output

CREC (GP24, Default 0x01)

Bit 7 - 5: Reserved.

Bit 4 - 3: Select Function.

= 00 Select Basic I/O function

= 01 Reserved

= 10 Select 2nd alternate function: Keyboard P16 I/O

= 11 Reserved

Bit 2: Int En

= 1 Enable Common IRQ

= 0 Disable Common IRQ

Bit 1: Polarity: 1: Invert, 0: No Invert

Bit 0: In/Out: 1: Input, 0: Output

CRED (GP25, Default 0x01)

Bit 7 - 4: Reserved.

Bit 3: Select Function.

= 1 Select alternate function: GATE A20(Connect to KBC P21).

= 0 Select basic I/O function

Bit 2: Int En

= 1 Enable Common IRQ

= 0 Disable Common IRQ

Bit 1: Polarity: 1: Invert, 0: No Invert

Bit 0: In/Out: 1: Input, 0: Output

CRF0 (Default 0x00)

Debounce Filter Enable or Disable for General Purpose I/O Combined Interrupt. The Debounce Filter can reject a pulse with 1ms width or less.

Bit 7 - 4: Reserved

Bit 3: GP Common IRQ Filter Select

= 1 Debounce Filter Enabled

= 0 Debounce Filter Bypassed

Bit 2 - 0: Reserved

CRF1 (Reserved)

CRF2 (Default 0x00)

Watch Dog Timer Time-out value. Writing a non-zero value to this register causes the counter to load the value to Watch Dog Counter and start to count down. If the Bit2 and Bit 1 are set, any Mouse Interrupt or Keyboard Interrupt happen will also cause to reload the non-zero value to Watch Dog Counter and count down. Read this register can not access Watch Dog Timer Time-out value, but can access the current value in Watch Dog Counter.

Bit 7 - 0:

= 0x00 Time-out Disable

= 0x01 Time-out occurs after 1 minute/second

= 0x02 Time-out occurs after 2 minutes/seconds

= 0x03 Time-out occurs after 3 minutes/seconds

.....

= 0xFF Time-out occurs after 255 minutes

CRF3 (WDT_CTRL0, Default 0x00)

Watch Dog Timer Control Register #0

Bit 7 - 4: Reserved

Bit 3: When Time-out occurs, Enable or Disable Power LED with 1 Hz and 50% duty cycle output.

= 1 Enable

= 0 Disable

Bit 2: Mouse interrupt reset Enable or Disable

= 1 Watch Dog Timer is reset upon a Mouse interrupt

= 0 Watch Dog Timer is not affected by Mouse interrupt

Bit 1: Keyboard interrupt reset Enable or Disable

= 1 Watch Dog Timer is reset upon a Keyboard interrupt

= 0 Watch Dog Timer is not affected by Keyboard interrupt

Bit 0: Reserved.

CRF4 (WDT_CTRL1, Default 0x00)

Watch Dog Timer Control Register #1

Bit 7: Reserved

Bit 6:

= 1 Watch Dog counter counts in seconds.

= 0 Watch Dog counter counts in minutes.

Bit 5-4: Power LED toggle pulse frequency select

= 00 Power LED toggle pulse frequency is 1Hz

= 01 Power LED toggle pulse frequency is 1/2Hz

= 10 Power LED toggle pulse frequency is 1/4Hz

= 11 Power LED toggle pulse frequency is 1/8Hz

Bit 3: Enable the rising edge of Keyboard Reset(P20) to force Time-out event, R/W*

= 1 Enable

= 0 Disable

Bit 2: Force Watch Dog Timer Time-out, Write only*

= 1 Force Watch Dog Timer time-out event; this bit is self-clearing.

Bit 1: Enable Power LED toggle pulse with 50% duty cycle , R/W

= 1 Enable

= 0 Disable

Bit 0: Watch Dog Timer Status, R/W

= 1 Watch Dog Timer time-out occurred.

= 0 Watch Dog Timer counting

***Note**: 1). Internal logic provides an 1us Debounce Filter to reject the width of P20 pulse less than 1us.

2). The P20 signal that coming from Debounce Filter is ORed with the signal generated by the Force Time-out bit and then connect to set the Bit 0(Watch Dog Timer Status). Th**e ORed signal is self-clearing.**

12.9 Logical Device A (ACPI)

CR30 (Default 0x00)

Bit 7 - 1: Reserved.

Bit 0: = 1 Activates the logical device.

= 0 Logical device is inactive.

CR70 (Default 0x00)

Bit 7 - 4: Reserved.

Bit 3 - 0: These bits select IRQ resources for SCI#.

CRE0 (Default 0x00)

Bit 7: DIS-PANSWIN. Disable panel switch input to turn system power supply on.

= 0 PANSWIN# is wire-ANDed and connected to PANSWOUT#.

= 1 PANSWIN# is blocked and can not affect PANSWOUT#.

Bit 6: ENKBWAKEUP. Enable Keyboard to Wake-Up system via PANSWOUT#.

= 0 Disable Keyboard Wake-Up function.

= 1 Enable Keyboard Wake-Up function.

Bit 5: ENMSWAKEUP. Enable Mouse to Wake-Up system via PANSWOUT#.

= 0 Disable Mouse Wake-Up function.

= 1 Enable Mouse Wake-Up function.

Bit 4: MSRKEY. Select Mouse Left/Right Botton to Wake-Up system via PANSWOUT#.

= 0 Select click on Mouse Left-botton to Wake the system up.

= 1 Select click on Mouse right-botton to Wake the system up.

Bit 3: Reserved.

Bit 2: KB/MS Swap. Enable Keyboard/Mouse port-swap.

= 0 Keyboard/Mouse ports are not swapped.

= 1 Keyboard/Mouse ports are swapped.

Bit 1: MSXKEY. Enable any character received from Mouse to Wake-Up the system.

= 0 Just clicking Mouse left/right-botton twice can Wake the system up.

= 1 Just clicking Mouse left/right-botton once can Wake the system up.

Bit 0: KBXKEY. Enable any character received from Keyboard to Wake-Up the system.

= 0 Only predetermined specific key combination can Wake-Up the system.

= 1 Any character received from Keyboard can Wake-Up the system.

CRE1 (Default 0x00) Keyboard Wake-Up Index Register

This register is used to indicate which Keyboard Wake-Up Shift register or Predetermined key Register is to be read/written via CRE2. The range of Keyboard Wake-Up index register is 0x00 - 0x0E,

CRE2 Keyboard Wake-Up Data Register

CRE3 (Read only) Keyboard/Mouse Wake-Up Status Register

Bit 7-4: Reserved.

Bit 4: POWERRESUME_STS. The bit is set after powerloss occured and cleared by reading this register.

Bit 3: Revered

Bit 2: PANSW_STS. The Panel switch event is caused by PANSWIN#. This bit is cleared by reading this register.

Bit 1: Mouse_STS. The Panel switch event is caused by Mouse Wake-Up event. This bit is cleared by reading this register.

Bit 0: Keyboard_STS. The Panel switch event is caused by Keyboard Wake-Up event. This bit is cleared by reading this register.

CRE4 OnNow/Powerloss Control Register.

Bit 7: Powerloss Control bit 2.

Bit 6: Powerloss Control bit 1.

Bit 5: Powerloss Control bit 0.

Bit 4: 32KHz clock source select.

Bit 3: Reserved.

Bit 2: Reserved.

Bit 1-0: Reserved.

CRE5 (Default 0x00)

Bit 7: Reserved.

Bit 6 - 0: Compared Code Length. When the compared codes are storaged in the data register,

these data length should be written to this register.

CRE6 (Default 0x00)

Bit 7 - 0: Reserved.

CRE7 (Default 0x00)

Bit 7 - 3: Reserved.

Bit 2: Reserved

Bit 1: Invert RX Data.

= 1 Inverting RX Data.

= 0 Not inverting RX Data.

Bit 0: Enable Demodulation.

= 1 Enable received signal to demodulate.

= 0 Disable received signal to demodulate.

CRF0 (Default 0x00)

Bit 7: CHIPPME. Chip level auto power management enable.

= 0 disable the auto power management functions

= 1 enable the auto power management functions.

Bit 6: URCPME. UART C auto power management enable.

= 0 disable the auto power management functions.

= 1 enable the auto power management functions.

Bit 5 - 4: Reserved. Return zero when read.

Bit 3: PRTPME. Printer port auto power management enable.

= 0 disable the auto power management functions.

= 1 enable the auto power management functions.

Bit 2: FDCPME. FDC auto power management enable.

= 0 disable the auto power management functions.

= 1 enable the auto power management functions.

Bit 1: URAPME. UART A auto power management enable.

= 0 disable the auto power management functions.

= 1 enable the auto power management functions.

Bit 0: URBPME. UART B auto power management enable.

= 0 disable the auto power management functions.

= 1 enable the auto power management functions.

CRF1 (Default 0x00)

Bit 7: WAK_STS. This bit is set when the chip is in the sleeping state and an enabled resume event occurs. Upon setting this bit, the sleeping/working state machine will transition the system to the working state. This bit is only set by hardware and is cleared by writing a 1 to this bit position or by the sleeping/working state machine automatically when the global standby timer expires.

= 0 the chip is in the sleeping state.

= 1 the chip is in the working state.

Bit 6: Device's trap status.

Bit 5 - 4: Reserved. Return zero when read.

Bit 3 - 0: Devices' trap status.

These bits of trap status indicate that the individual device Wakes-Up due to any I/O access, IRQ, and external input to the device. The device's idle timer reloads the preset expiry depending on which device wakes up. These 5 bits are controlled by the UART C, printer port, FDC, UART A and UART B power down machines respectively . Writing a 1 clears this bit and writing a 0 has no effect. Note that: the user is not supposed to change the status while power management function is enabled.

Bit 6: URCTRAPSTS. UART C trap status.

= 0 UART C is now in the sleeping state.

= 1 UART C is now in the working state due to any UART C access, any IRQ, the receiver begins receiving a start bit, the transmitter shift register begins transmitting a start bit, and any transition on MODEM control input lines.

Bit 3: PRTTRAPSTS. Printer port trap status.

= 0 the printer port is now in the sleeping state.

= 1 the printer port is now in the workinging state due to any printer port access, any IRQ, any DMA acknowledge, and any transition on BUSY, ACK#, PE, SLCT, and ERR# pins.

Bit 2: FDCTRAPSTS. FDC trap status.

= 0 FDC is now in the sleeping state.

= 1 FDC is now in the working state due to any FDC access, any IRQ, any DMA acknowledge, and any enabling of the motor enable bits in the DOR register.

Bit 1: URATRAPSTS. UART A trap status.

= 0 UART A is now in the sleeping state.

= 1 UART A is now in the working state due to any UART A access, any IRQ, the receiver begins receiving a start bit, the transmitter shift register begins transmitting a start bit, and any transition on MODEM control input lines.

Bit 0: URBTRAPSTS. UART B trap status.

= 0 UART B is now in the sleeping state.

= 1 UART B is now in the workinging state due to any UART B access, any IRQ, the receiver begins receiving a start bit, the transmitter shift register begins transmitting a start bit, and any transition on MODEM control input lines.

CRF3 (Default 0x00)

Bit 7: Reserved. Return zero when read.

Bit 6 - 0: Device's IRQ status.

These bits indicate the IRQ status of the individual device respectively. The device's IRQ status bit is set by their source device and is cleared by writing a 1. Writing a 0 has no effect.

Bit 6: URCIRQSTS. UART C IRQ status.

Bit 5: MOUIRQSTS. MOUSE IRQ status.

Bit 4: KBCIRQSTS. KBC IRQ status.

Bit 3: PRTIRQSTS. printer port IRQ status.

Bit 2: FDCIRQSTS. FDC IRQ status.

Bit 1: URAIRQSTS. UART A IRQ status.

Bit 0: URBIRQSTS. UART B IRQ status.

CRF4 (Default 0x00)

Bit 7 - 5: Reserved. Return zero when read.

Bit 3: Reserved. Return zero when read.

Bit 4 and Bit 2 - 0:These bits indicate the status of the individual GPIO function respectively. The status is set by their source function and is cleared by writing a 1. Writing a 0 has no effect.

Bit 4: WDTIRQSTS. Watch dog timer IRQ status at logical device 8.

Bit 2: COMIRQSTS. Common IRQ status of GP20 - GP25 at logical device 8.

Bit 1: GP11IRQSTS. GP11 interrupt steering status at logical device 7.

Bit 0: GP10IRQSTS. GP10 interrupt steering status at logical device 7.

CRF6 (Default 0x00)

Bit 7: Reserved. Return zero when read.

Bit 6 - 0: Enable bits of the SMI#/SCI# generation due to the device's IRQ.

These bits enable the generation of an SMI#/SCI# interrupt due to any IRQ of the devices.

SMI#/SCI# logic output = (URBIRQEN and URBIRQSTS) or (URAIRQEN and URAIRQSTS) or (FDCIRQEN and FDCIRQSTS) or (PRTIRQEN and PRTIRQSTS) or (KBCIRQEN and KBCIRQSTS) or (MOUIRQEN and MOUIRQSTS) or (URCIRQEN and URCIRQSTS) or (WDTIRQEN and WDTIRQSTS) or (COMIRQEN and COMIRQSTS) or (GP11IRQEN and GP11IRQSTS) or (GP10IRQEN and GP10IRQSTS)

Bit 6: URCIRQEN.

= 0 disable the generation of an SMI#/SCI# interrupt due to UART C's IRQ.

= 1 enable the generation of an SMI#/SCI# interrupt due to UART C's IRQ.

Bit 5: MOUIRQEN.

= 0 disable the generation of an SMI#/SCI# interrupt due to MOUSE's IRQ.

= 1 enable the generation of an SMI#/SCI# interrupt due to MOUSE's IRQ.

Bit 4: KBCIRQEN.

= 0 disable the generation of an SMI#/SCI# interrupt due to KBC's IRQ.

= 1 enable the generation of an SMI#/SCI# interrupt due to KBC's IRQ.

Bit 3: PRTIRQEN.

= 0 disable the generation of an SMI#/SCI# interrupt due to printer port's IRQ.

= 1 enable the generation of an SMI#/SCI# interrupt due to printer port's IRQ.

Bit 2: FDCIRQEN.

= 0 disable the generation of an SMI#/SCI# interrupt due to FDC's IRQ.

= 1 enable the generation of an SMI#/SCI# interrupt due to FDC's IRQ.

Bit 1: URAIRQEN.

= 0 disable the generation of an SMI#/SCI# interrupt due to UART A's IRQ.

= 1 enable the generation of an SMI#/SCI# interrupt due to UART A's IRQ.

Bit 0: URBIRQEN.

= 0 disable the generation of an SMI#/SCI# interrupt due to UART B's IRQ.

= 1 enable the generation of an SMI#/SCI# interrupt due to UART B's IRQ.

CRF7 (Default 0x00)

Bit 7 - 5: Reserved. Return zero when read.

Bit 3: Reserved. Return zero when read.

Bit 4 and Bit 2 - 0:Enable bits of the SMI#/SCI# generation due to the individual GPIO IRQ functions.

Bit 4: WDTIRQEN.

= 0 disable the generation of an SMI#/SCI# interrupt due to watch dog timer's IRQ.

= 1 enable the generation of an SMI#/SCI# interrupt due to watch dog timer's IRQ.

Bit 2: COMIRQEN.

= 0 disable the generation of an SMI#/SCI# interrupt due to common IRQ function's IRQ.

= 1 enable the generation of an SMI#/SCI# interrupt due to common IRQ function's IRQ.

Bit 1: GP11IRQEN.

= 0 disable the generation of an SMI#/SCI# interrupt due to GP11 interrupt steering's IRQ.

= 1 enable the generation of an SMI#/SCI# interrupt due to GP11 interrupt steering's IRQ.

Bit 0: GP10IRQEN.

= 0 disable the generation of an SMI#/SCI# interrupt due to GP10 interrupt steering's IRQ.

= 1 enable the generation of an SMI#/SCI# interrupt due to GP10 interrupt steering's IRQ.

CRF9 (Default 0x00)

Bit 7 - 3: Reserved. Return zero when read.

Bit 2: SCI_EN: Select the power management events to be either an SCI# OR SMII# interrupt for the IRQ events. Note that: this bit is valid only when SMISCI_OE = 1.

= 0 the power management events will generate an SMI# event.

= 1 the power management events will generate an SCI# event.

Bit 1: FSLEEP: This bit selects the fast expiry time of individual devices

= 0 1 second.

= 1 8 milli-seconds.

Bit 0: SMISCI_OE: This is the SMI# and SCI# enable bit.

= 0 neither SMI# nor SCI# will be generated. Only the IRQ status bit is set.

= 1 an SMI# or SCI# event will be generated.

CRFE, FF (Default 0x00)

Reserved for Winbond test.

13. SPECIFICATIONS

13.1 Absolute Maximum Ratings

PARAMETER	RATING	UNIT
Power Supply Voltage	-0.5 to 7.0	V
Input Voltage	-0.5 to V_{DD}+0.5	V
Battery Voltage V_{BAT}	4.0 to 1.8	V
5V Standby V_{SB}	4.5 to 5.5	V
Operating Temperature	0 to +70	° C
Storage Temperature	-55 to +150	° C

Note: Exposure to conditions beyond those listed under Absolute Maximum Ratings may adversely affect the life and reliability of the device.

13.2 DC CHARACTERISTICS

(Ta = 0° C to 70° C, V_{DD} = 5V ± 10%, V_{SS} = 0V)

PARAMETER	SYM.	MIN.	TYP.	MAX.	UNIT	CONDITIONS
Battery Quiescent Current	I_{BAT}			≤1	uA	V_{BAT} = 2.5 V
Stand-by Power Supply Quiescent Current	I_{VSB}			2.0	mA	V_{SB} = 5.0 V, All ACPI pins are not connected.
I/O_{8t} - TTL level bi-directional pin with source-sink capability of 8 mA						
Input Low Voltage	V_{IL}			0.8	V	
Input High Voltage	V_{IH}	2.0			V	
Output Low Voltage	V_{OL}			0.4	V	I_{OL} = 8 mA
Output High Voltage	V_{OH}	2.4			V	I_{OH} = - 8 mA
Input High Leakage	I_{LIH}			+10	μA	V_{IN} = V_{DD}
Input Low Leakage	I_{LIL}			-10	μA	V_{IN} = 0V
I/O_{6t} - TTL level bi-directional pin with source-sink capability of 6 mA						
Input Low Voltage	V_{IL}			0.8	V	
Input High Voltage	V_{IH}	2.0			V	
Output Low Voltage	V_{OL}			0.4	V	I_{OL} = 6 mA
Output High Voltage	V_{OH}	2.4			V	I_{OH} = - 6 mA
Input High Leakage	I_{LIH}			+10	μA	V_{IN} = V_{DD}
Input Low Leakage	I_{LIL}			-10	μA	V_{IN} = 0V

DC CHARACTERISTICS, continued

PARAMETER	SYM.	MIN.	TYP.	MAX.	UNIT	CONDITIONS
I/O_8 - CMOS level bi-directional pin with source-sink capability of 8 mA						
Input Low Voltage	V_{IL}			0.3xV_{DD}	V	
Input High Voltage	V_{IH}	0.7xV_{DD}			V	
Output Low Voltage	V_{OL}			0.4	V	I_{OL} = 8 mA
Output High Voltage	V_{OH}	3.5			V	I_{OH} = - 8 mA
Input High Leakage	I_{LIH}			+ 10	μA	V_{IN} = V_{DD}
Input Low Leakage	I_{LIL}			- 10	μA	V_{IN} = 0V
I/O_{12} - CMOS level bi-directional pin with source-sink capability of 12 mA						
Input Low Voltage	V_{IL}			0.3xV_{DD}	V	
Input High Voltage	V_{IH}	0.7xV_{DD}			V	
Output Low Voltage	V_{OL}			0.4	V	I_{OL} = 12 mA
Output High Voltage	V_{OH}	3.5			V	I_{OH} = - 12 mA
Input High Leakage	I_{LIH}			+ 10	μA	V_{IN} = V_{DD}
Input Low Leakage	I_{LIL}			- 10	μA	V_{IN} = 0V
I/O_{16u} - CMOS level bi-directional pin with source-sink capability of 16 mA, with internal pull-up resistor						
Input Low Voltage	V_{IL}			0.3xV_{DD}	V	
Input High Voltage	V_{IH}	0.7xV_{DD}			V	
Output Low Voltage	V_{OL}			0.4	V	I_{OL} = 16 mA
Output High Voltage	V_{OH}	3.5			V	I_{OH} = - 16 mA
Input High Leakage	I_{LIH}			+ 10	μA	V_{IN} = V_{DD}
Input Low Leakage	I_{LIL}			- 10	μA	V_{IN} = 0V
I/OD_{16u} - CMOS level Open-Drain pin with source-sink capability of 16 mA, with internal pull-up resistor						
Input Low Voltage	V_{IL}			0.3xV_{DD}	V	
Input High Voltage	V_{IH}	0.7xV_{DD}			V	
Output Low Voltage	V_{OL}			0.4	V	I_{OL} = 16 mA
Output High Voltage	V_{OH}	3.5			V	I_{OH} = - 16 mA
Input High Leakage	I_{LIH}			+ 10	μA	V_{IN} = V_{DD}
Input Low Leakage	I_{LIL}			- 10	μA	V_{IN} = 0V

DC CHARACTERISTICS, continued

PARAMETER	SYM.	MIN.	TYP.	MAX.	UNIT	CONDITIONS
I/O_{12t} - TTL level bi-directional pin with source-sink capability of 12 mA						
Input Low Voltage	V_{IL}			0.8	V	
Input High Voltage	V_{IH}	2.0			V	
Output Low Voltage	V_{OL}			0.4	V	I_{OL} = 12 mA
Output High Voltage	V_{OH}	2.4			V	I_{OH} = - 12 mA
Input High Leakage	I_{LIH}			+ 10	μA	$V_{IN} = V_{DD}$
Input Low Leakage	I_{LIL}			- 10	μA	V_{IN} = 0V
I/O_{24t} - TTL level bi-directional pin with source-sink capability of 24 mA						
Input Low Voltage	V_{IL}			0.8	V	
Input High Voltage	V_{IH}	2.0			V	
Output Low Voltage	V_{OL}			0.4	V	I_{OL} = 24 mA
Output High Voltage	V_{OH}	2.4			V	I_{OH} = - 24 mA
Input High Leakage	I_{LIH}			+ 10	μA	$V_{IN} = V_{DD}$
Input Low Leakage	I_{LIL}			- 10	μA	V_{IN} = 0V
OUT_{8t} - TTL level output pin with source-sink capability of 8 mA						
Output Low Voltage	V_{OL}			0.4	V	I_{OL} = 8 mA
Output High Voltage	V_{OH}	2.4			V	I_{OH} = - 8 mA
OUT_{12t} - TTL level output pin with source-sink capability of 12 mA						
Output Low Voltage	V_{OL}			0.4	V	I_{OL} = 12 mA
Output High Voltage	V_{OH}	2.4			V	I_{OH} = -12 mA
OD_{12} - Open-drain output pin with sink capability of 12 mA						
Output Low Voltage	V_{OL}			0.4	V	I_{OL} = 12 mA
OD_{24} - Open-drain output pin with sink capability of 24 mA						
Output Low Voltage	V_{OL}			0.4	V	I_{OL} = 24 mA
IN_t - TTL level input pin						
Input Low Voltage	V_{IL}			0.8	V	
Input High Voltage	V_{IH}	2.0			V	
Input High Leakage	I_{LIH}			+10	μA	$V_{IN} = V_{DD}$
Input Low Leakage	I_{LIL}			-10	μA	V_{IN} = 0 V

DC CHARACTERISTICS, continued

PARAMETER	SYM.	MIN.	TYP.	MAX.	UNIT	CONDITIONS
IN_c - CMOS level input pin						
Input Low Voltage	V_{IL}			0.3×V_{DD}	V	
Input High Voltage	V_{IH}	0.7×V_{DD}			V	
Input High Leakage	I_{LIH}			+10	μA	V_{IN} = V_{DD}
Input Low Leakage	I_{LIL}			-10	μA	V_{IN} = 0 V
IN_{cs} - CMOS level Schmitt-triggered input pin						
Input Low Threshold Voltage	V_{t-}	1.3	1.5	1.7	V	V_{DD} = 5 V
Input High Threshold Voltage	V_{t+}	3.2	3.5	3.8	V	V_{DD} = 5 V
Hystersis	V_{TH}	1.5	2		V	V_{DD} = 5 V
Input High Leakage	I_{LIH}			+10	μA	V_{IN} = V_{DD}
Input Low Leakage	I_{LIL}			-10	μA	V_{IN} = 0 V
IN_{cu} - CMOS level input pin with internal pull-up resistor						
Input Low Voltage	V_{IL}			0.7xV_{DD}	V	
Input High Voltage	V_{IH}	0.7xV_{DD}			V	
Input High Leakage	I_{LIH}			+10	μA	V_{IN} = V_{DD}
Input Low Leakage	I_{LIL}			-10	μA	V_{IN} = 0 V
IN_{ts} - TTL level Schmitt-triggered input pin						
Input Low Threshold Voltage	V_{t-}	0.5	0.8	1.1	V	V_{DD} = 5 V
Input High Threshold Voltage	V_{t+}	1.6	2.0	2.4	V	V_{DD} = 5 V
Hystersis	V_{TH}	0.5	1.2		V	V_{DD} = 5 V
Input High Leakage	I_{LIH}			+10	μA	V_{IN} = V_{DD}
Input Low Leakage	I_{LIL}			-10	μA	V_{IN} = 0 V
IN_{tsu} - TTL level Schmitt-triggered input pin with internal pull-up resistor						
Input Low Threshold Voltage	V_{t-}	0.5	0.8	1.1	V	V_{DD} = 5 V
Input High Threshold Voltage	V_{t+}	1.6	2.0	2.4	V	V_{DD} = 5 V
Hystersis	V_{TH}	0.5	1.2		V	V_{DD} = 5 V
Input High Leakage	I_{LIH}			+10	μA	V_{IN} = V_{DD}
Input Low Leakage	I_{LIL}			-10	μA	V_{IN} = 0 V

13.3 AC Characteristics

13.3.1 FDC: Data rate = 1 MB, 500 KB, 300 KB, 250 KB/sec.

PARAMETER	SYM.	TEST CONDITIONS	MIN.	TYP. (NOTE 1)	MAX.	UNIT
SA9-SA0, AEN, DACK#, CS#, setup time to IOR# ↓	TAR		25			nS
SA9-SA0, AEN, DACK#, hold time for IOR# ↑	TAR		0			nS
$\overline{IOR}$ width	TRR		80			nS
Data access time from IOR# ↓	TFD	CL = 100 pf			80	nS
Data hold from IOR# ↓	TDH	CL = 100 pf	10			nS
SD to from IOR# ↑	TDF	CL = 100 pf	10		50	nS
IRQ delay from IOR# ↑	TRI				360/570 /675	nS
SA9-SA0, AEN, DACK#, setup time to IOW# ↓	TAW		25			nS
SA9-SA0, AEN, DACK#, hold time for IOW# ↑	TWA		0			nS
IOW# width	TWW		60			nS
Data setup time to IOW# ↑	TDW		60			nS
Data hold time from IOW# ↑	TWD		0			nS
IRQ delay from IOW# ↑	TWI				360/570 /675	nS
DRQ cycle time	TMCY		27			µS
DRQ delay time DACK# ↓	TAM				50	nS
DRQ to DACK# delay	TMA		0			nS
DACK# width	TAA		260/430 /510			nS
IOR# delay from $\overline{DRQ}$	TMR		0			nS
IOW# delay from $\overline{DRQ}$	TMW		0			nS

AC Characteristics, FDC continued

PARAMETER	SYM.	TEST CONDITIONS	MIN.	TYP. (NOTE 1)	MAX.	UNIT
IOW# or IOR# response time from DRQ	TMRW			6/12 /20/24		µS
TC width	TTC		135/220 /260			nS
RESET width	TRST		1.8/3/3. 5			µS
INDEX# width	TIDX		0.5/0.9 /1.0			µS
DIR# setup time to STEP#	TDST		1.0/1.6 /2.0			µS
DIR# hold time from STEP#	TSTD		24/40/4 8			µS
STEP# pulse width	TSTP		6.8/11.5 /13.8	7/11.7 /14	7.2/11.9 /14.2	µS
STEP# cycle width	TSC		Note 2	Note 2	Note 2	µS
WD# pulse width	TWDD		100/185 /225	125/210 /250	150/235 /275	µS
Write precompensation	TWPC		100/138 /225	125/210 /250	150/235 /275	µS

Notes:

1. Typical values for T = 25° C and normal supply voltage.
2. Programmable from 2 mS through 32 mS in 2 mS increments.

13.3.2 UART/Parallel Port

PARAMETER	SYMBOL	TEST CONDITIONS	MIN.	MAX.	UNIT
Delay from Stop to Set Interrupt	T_{SINT}		9/16		Baud Rate
Delay from IOR# Reset Interrupt	T_{RINT}	100 pf Loading		1	µS
Delay from Initial IRQ Reset to Transmit Start	T_{IRS}		1/16	8/16	Baud Rate
Delay from IOW# to Reset interrupt	T_{HR}	100 pf Loading		175	nS
Delay from Initial IOW# to interrupt	T_{SI}		9/16	16/16	Baud Rate
Delay from Stop to Set Interrupt	T_{STI}			1/2	Baud Rate
Delay from IOR# to Reset Interrupt	T_{IR}	100 pF Loading		250	nS
Delay from IOR# to Output	T_{MWO}	100 pF Loading		200	nS
Set Interrupt Delay from Modem Input	T_{SIM}			250	nS
Reset Interrupt Delay from IOR#	T_{RIM}			250	nS
Interrupt Active Delay	T_{IAD}	100 pF Loading		25	nS
Interrupt Inactive Delay	T_{IID}	100 pF Loading		30	nS
Baud Divisor	N	100 pF Loading		2^{16}-1	

13.3.3 Parallel Port Mode Parameters

PARAMETER	SYM.	MIN.	TYP.	MAX.	UNIT
PD0-7, INDEX#, STROBE#, AUTOFD# Delay from IOW#	t1			100	nS
IRQ Delay from ACK#, nFAULT	t2			60	nS
IRQ Delay from IOW#	t3			105	nS
IRQ Active Low in ECP and EPP Modes	t4	200		300	nS
ERROR# Active to IRQ Active	t5			105	nS

13.3.4 EPP Data or Address Read Cycle Timing Parameters

PARAMETER	SYM.	MIN.	MAX.	UNIT
Ax Valid to IOR# Asserted	t1	40		nS
IOCHRDY Deasserted to IOR# Deasserted	t2	0		nS
IOR# Deasserted to Ax Valid	t3	10	10	nS
IOR# Deasserted to IOW# or IOR# Asserted	t4	40		
IOR# Asserted to IOCHRDY Asserted	t5	0	24	nS
PD Valid to SD Valid	t6	0	75	nS
IOR# Deasserted to SD Hi-Z (Hold Time)	t7	0	40	μS
SD Valid to IOCHRDY Deasserted	t8	0	85	nS
WAIT# Deasserted to IOCHRDY Deasserted	t9	60	160	nS
PD Hi-Z to PDBIR Set	t10	0		nS
WRITE# Deasserted to IOR# Asserted	t13	0		nS
WAIT# Asserted to WRITE# Deasserted	t14	0	185	nS
Deasserted to WRITE# Modified	t15	60	190	nS
IOR# Asserted to PD Hi-Z	t16	0	50	nS
WAIT# Asserted to PD Hi-Z	t17	60	180	nS
Command Asserted to PD Valid	t18	0		nS
Command Deasserted to PD Hi-Z	t19	0		nS
WAIT# Deasserted to PD Drive	t20	60	190	nS
WRITE# Deasserted to Command	t21	1		nS
PBDIR Set to Command	t22	0	20	nS
PD Hi-Z to Command Asserted	t23	0	30	nS
Asserted to Command Asserted	t24	0	195	nS
WAIT# Deasserted to Command Deasserted	t25	60	180	nS
Time out	t26	10	12	nS
PD Valid to WAIT# Deasserted	t27	0		nS
PD Hi-Z to WAIT# Deasserted	t28	0		μS

13.3.5 EPP Data or Address Write Cycle Timing Parameters

PARAMETER	SYM.	MIN.	MAX.	UNIT
Ax Valid to IOW# Asserted	t1	40		nS
SD Valid to Asserted	t2	10		nS
IOW# Deasserted to Ax Invalid	t3	10		nS
WAIT# Deasserted to IOCHRDY Deasserted	t4	0		nS
Command Asserted to WAIT# Deasserted	t5	10		nS
IOW# Deasserted to IOW# or IOR# Asserted	t6	40		nS
IOCHRDY Deasserted to IOW# Deasserted	t7	0	24	nS
WAIT# Asserted to Command Asserted	t8	60	160	nS
IOW# Asserted to WAIT# Asserted	t9	0	70	nS
PBDIR Low to WRITE# Asserted	t10	0		nS
WAIT# Asserted to WARIT# Asserted	t11	60	185	nS
WAIT# Asserted to WRITE# Change	t12	60	185	nS
IOW# Asserted to PD Valid	t13	0	50	nS
WAIT# Asserted to PD Invalid	t14	0		nS
PD Invalid to Command Asserted	t15	10		nS
IOW# to Command Asserted	t16	5	35	nS
WAIT# Asserted to Command Asserted	t17	60	210	nS
WAIT# Deasserted to Command Deasserted	t18	60	190	nS
Command Asserted to WAIT# Deasserted	t19	0	10	µS
Time out	t20	10	12	µS
Command Deasserted to WAIT# Asserted	t21	0		nS
IOW# Deasserted to WRITE# Deasserted and PD invalid	t22	0		nS

13.3.6 Parallel Port FIFO Timing Parameters

PARAMETER	SYMBOL	MIN.	MAX.	UNIT
DATA Valid to nSTROBE Active	t1	600		nS
nSTROBE Active Pulse Width	t2	600		nS
DATA Hold from nSTROBE Inactive	t3	450		nS
BUSY Inactive to PD Inactive	t4	80		nS
BUSY Inactive to nSTROBE Active	t5	680		nS
nSTROBE Active to BUSY Active	t6		500	nS

13.3.7 ECP Parallel Port Forward Timing Parameters

PARAMETER	SYMBOL	MIN.	MAX.	UNIT
nAUTOFD Valid to nSTROBE Asserted	t1	0	60	nS
PD Valid to nSTROBE Asserted	t2	0	60	nS
BUSY Deasserted to nAUTOFD Changed	t3	80	180	nS
BUSY Deasserted to PD Changed	t4	80	180	nS
nSTROBE Deasserted to BUSY Deasserted	t5	0		nS
BUSY Deasserted to nSTROBE Asserted	t6	80	200	nS
nSTROBE Asserted to BUSY Asserted	t7	0		nS
BUSY Asserted to nSTROBE Deasserted	t8	80	180	nS

13.3.8 ECP Parallel Port Reverse Timing Parameters

PARAMETER	SYMBOL	MIN.	MAX.	UNIT
PD Valid to nACK Asserted	t1	0		nS
nAUTOFD Deasserted to PD Changed	t2	0		nS
nAUTOFD Asserted to nACK Asserted	t3	0		nS
nAUTOFD Deasserted to nACK Deasserted	t4	0		nS
nACK Deasserted to nAUTOFD Asserted	t5	80	200	nS
PD Changed to nAUTOFD Deasserted	t6	80	200	nS

13.3.9 KBC Timing Parameters

NO.	DESCRIPTION	MIN.	MAX.	UNIT
T1	Address Setup Time from WRB	0		nS
T2	Address Setup Time from RDB	0		nS
T3	WRB Strobe Width	20		nS
T4	RDB Strobe Width	20		nS
T5	Address Hold Time from WRB	0		nS
T6	Address Hold Time from RDB	0		nS
T7	Data Setup Time	50		nS
T8	Data Hold Time	0		nS
T9	Gate Delay Time from WRB	10	30	nS
T10	RDB to Drive Data Delay		40	nS
T11	RDB to Floating Data Delay	0	20	nS
T12	Data Valid After Clock Falling (SEND)		4	µS
T13	K/B Clock Period	20		µS
T14	K/B Clock Pulse Width	10		µS
T15	Data Valid Before Clock Falling (RECEIVE)	4		µS
T16	K/B ACK After Finish Receiving	20		µS
T17	RC Fast Reset Pulse Delay (8 Mhz)	2	3	µS
T18	RC Pulse Width (8 Mhz)	6		µS
T19	Transmit Timeout		2	mS
T20	Data Valid Hold Time	0		µS
T21	Input Clock Period (6–12 Mhz)	83	167	nS
T22	Duration of CLK inactive	30	50	µS
T23	Duration of CLK active	30	50	µS
T24	Time from inactive CLK transition, used to time when the auxiliary device sample DATA	5	25	µS
T25	Time of inhibit mode	100	300	µS
T26	Time from rising edge of CLK to DATA transition	5	T28-5	µS
T27	Duration of CLK inactive	30	50	µS
T28	Duration of CLK active	30	50	µS
T29	Time from DATA transition to falling edge of CLK	5	25	µS

13.3.10 GPIO Timing Parameters

SYMBOL	PARAMETER	MIN.	MAX.	UNIT
t_{WGO}	Write data to GPIO update		300(Note 1)	ns

Note : Refer to Microprocessor Interface Timing for Read Timing.

13.3.11 Keyboard/Mouse Timing Parameters

SYMBOL	PARAMETER	MIN.	MAX.	UNIT
t_{SWL}	PANSWIN# falling edge to PANSWOUT# falling edge		20	ns
t_{SWH}	PANSWIN# falling edge to PANSWOUT# Hi-Z		50	ns
t_{WKUPD}	KCLK/MCLK falling edge to PANSWOUT# falling edge delay		200	ns
t_{WKUPW}	PANSWOUT# active pulse width	0.5	1	sec

14. TIMING WAVEFORMS

14.1 14.1 FDC

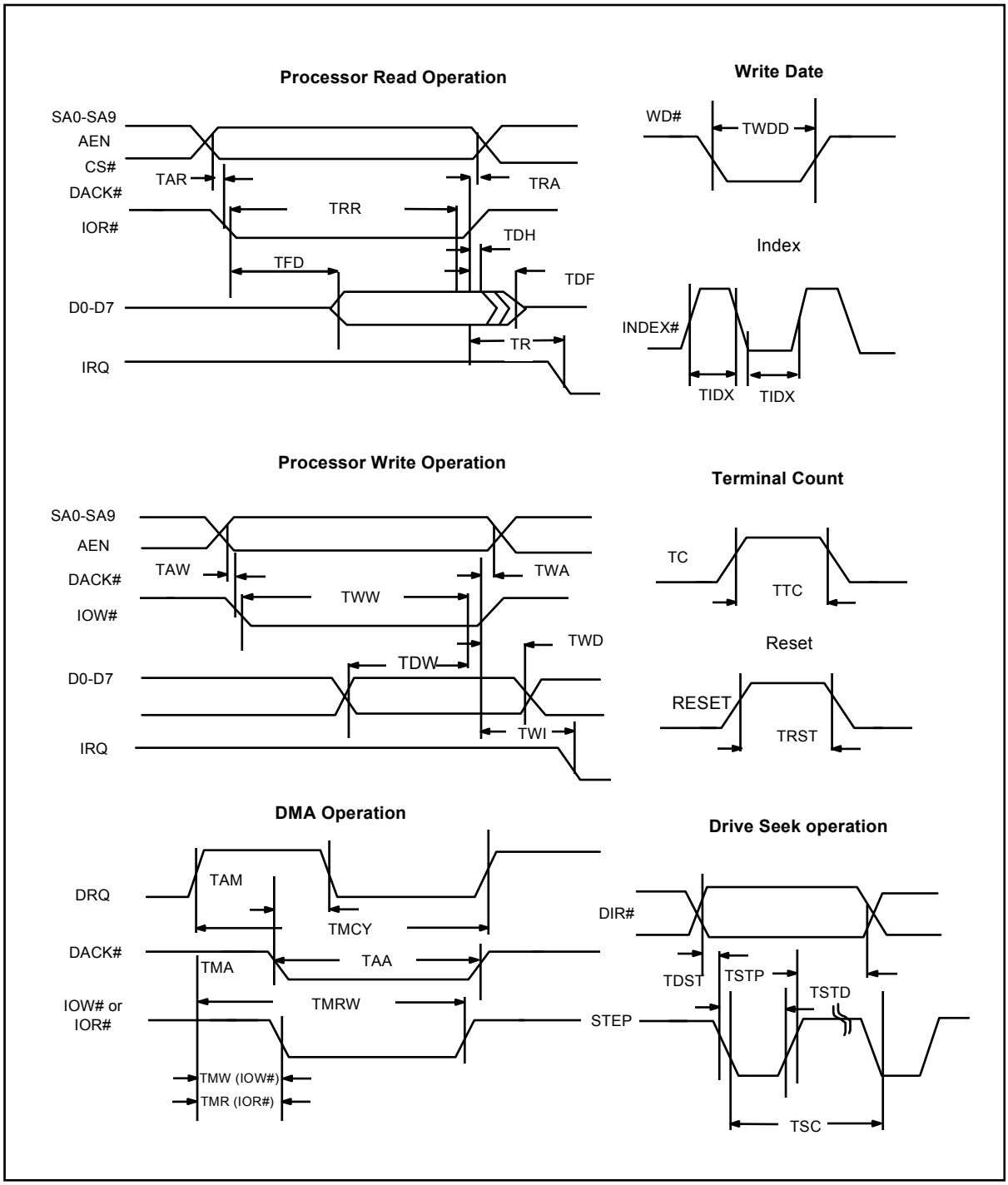

14.2 UART/Parallel

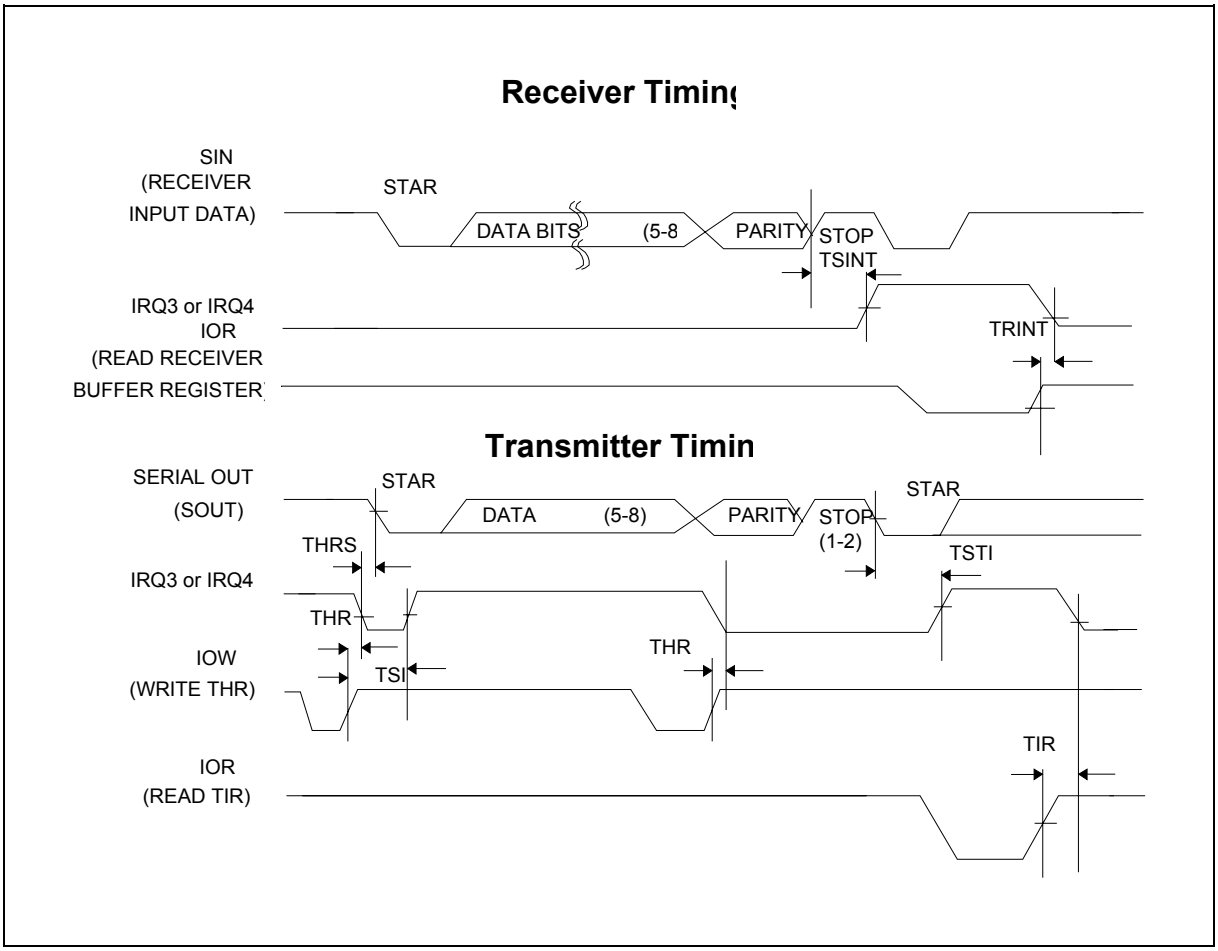

14.2.1 Modem Control Timing

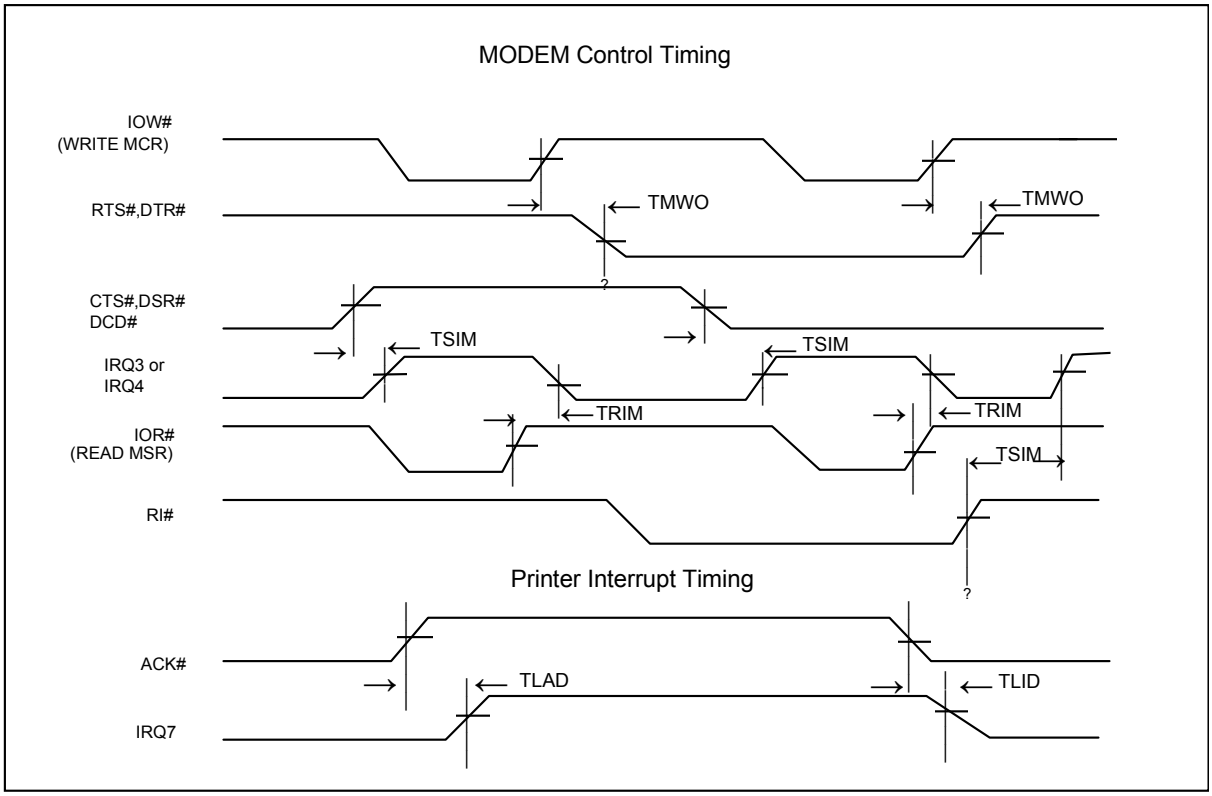

14.3 Parallel Port

14.3.1 Parallel Port Timing

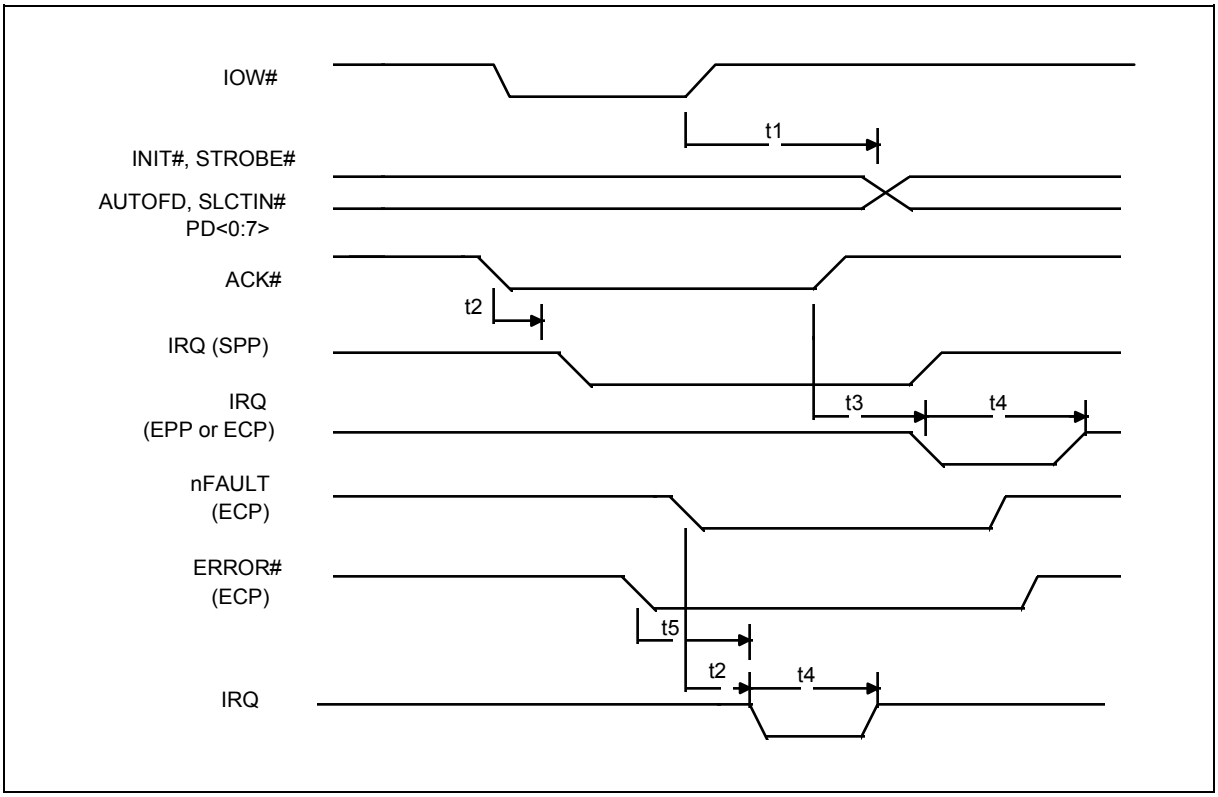

14.3.2 EPP Data or Address Read Cycle (EPP Version 1.9)

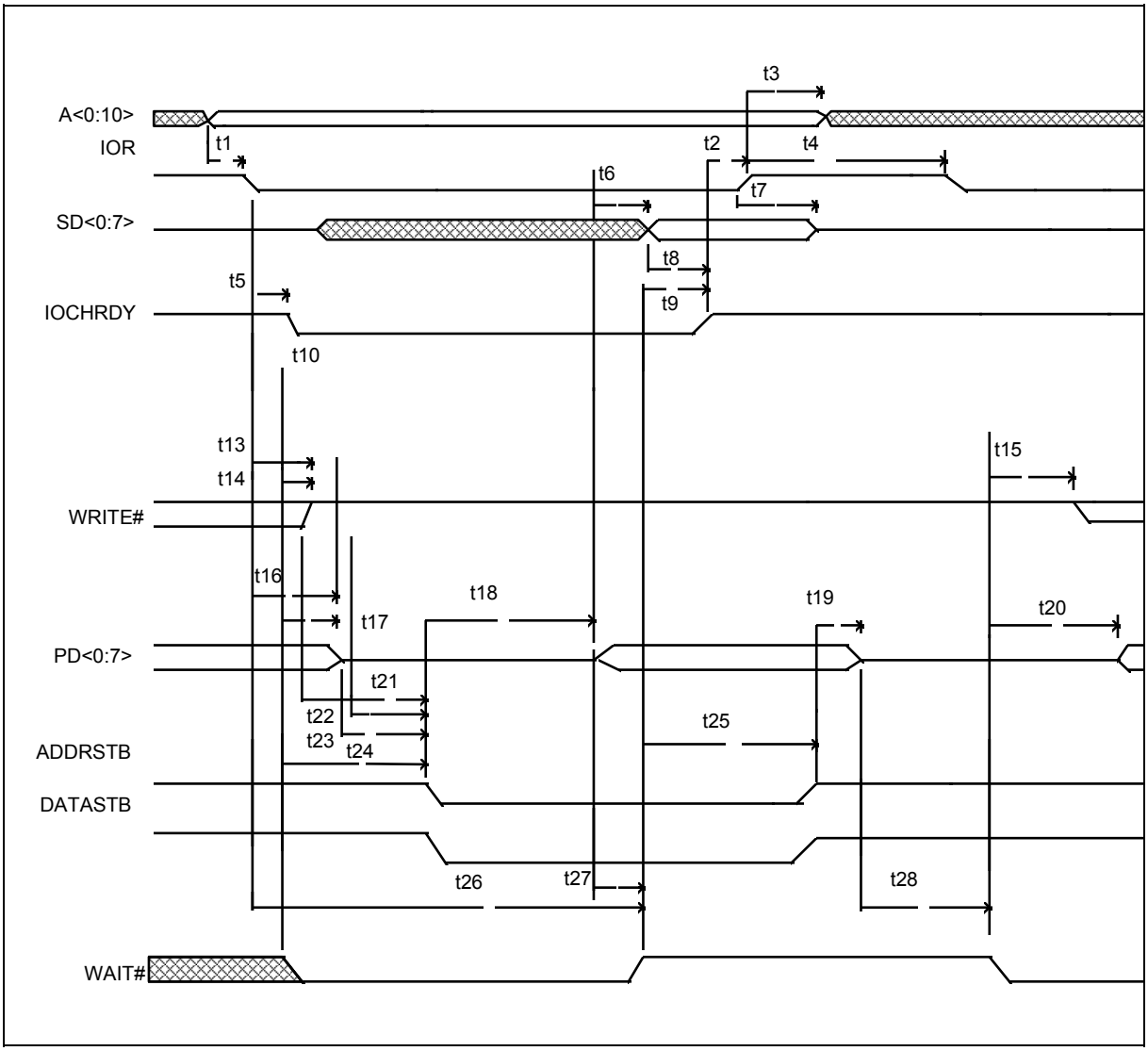

14.3.3 EPP Data or Address Write Cycle (EPP Version 1.9)

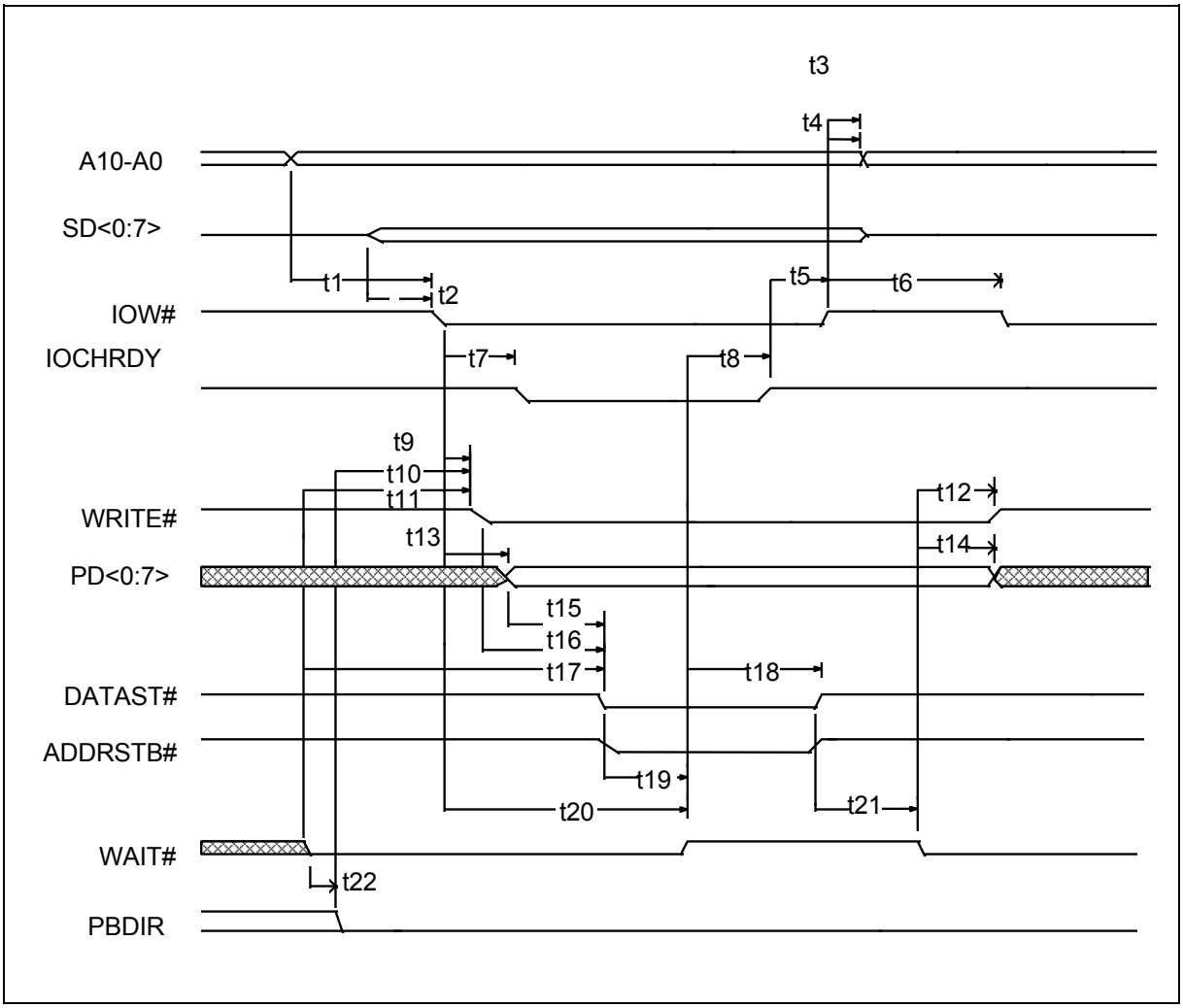

14.3.4 EPP Data or Address Read Cycle (EPP Version 1.7)

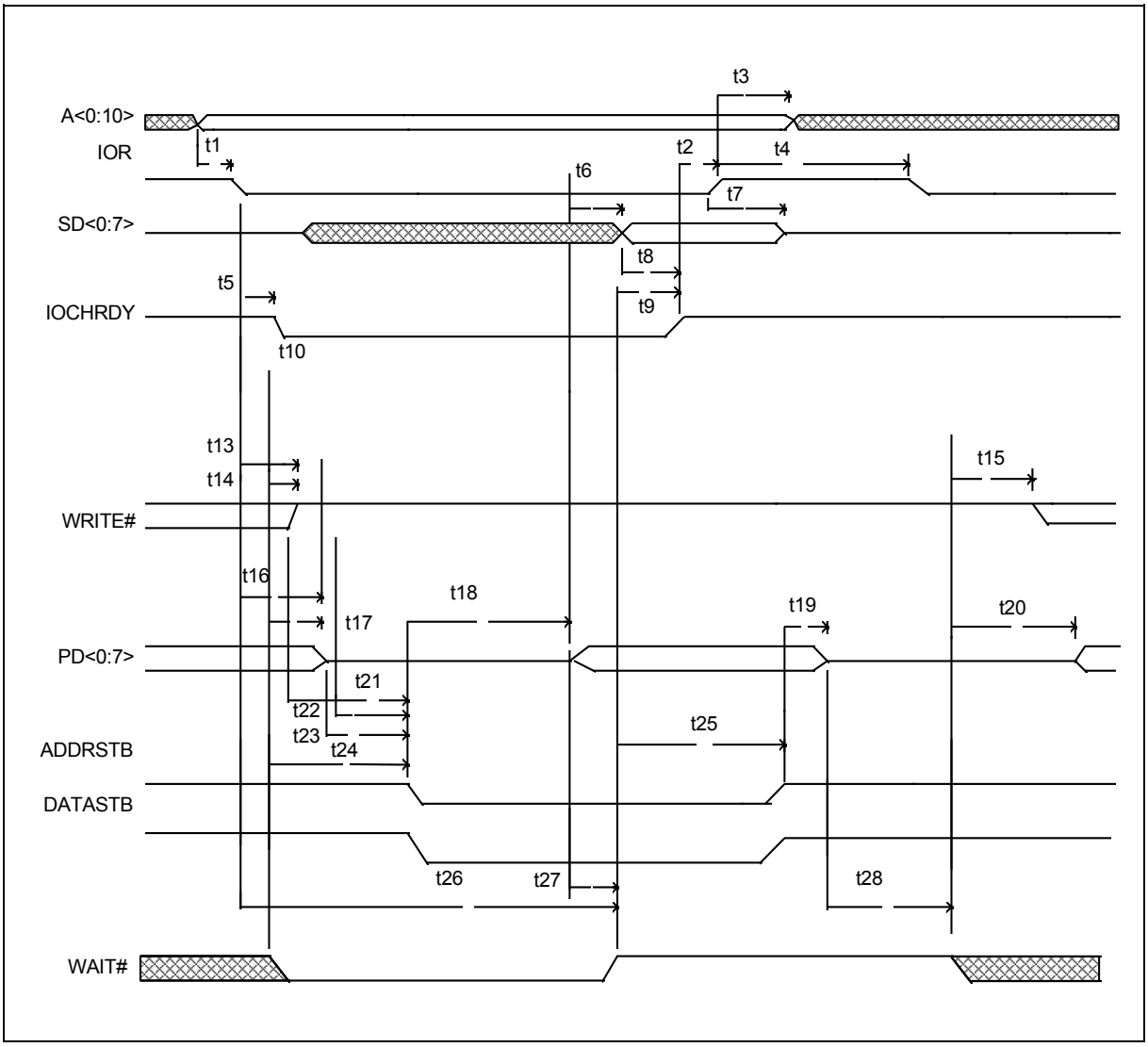

14.3.5 EPP Data or Address Write Cycle (EPP Version 1.7)

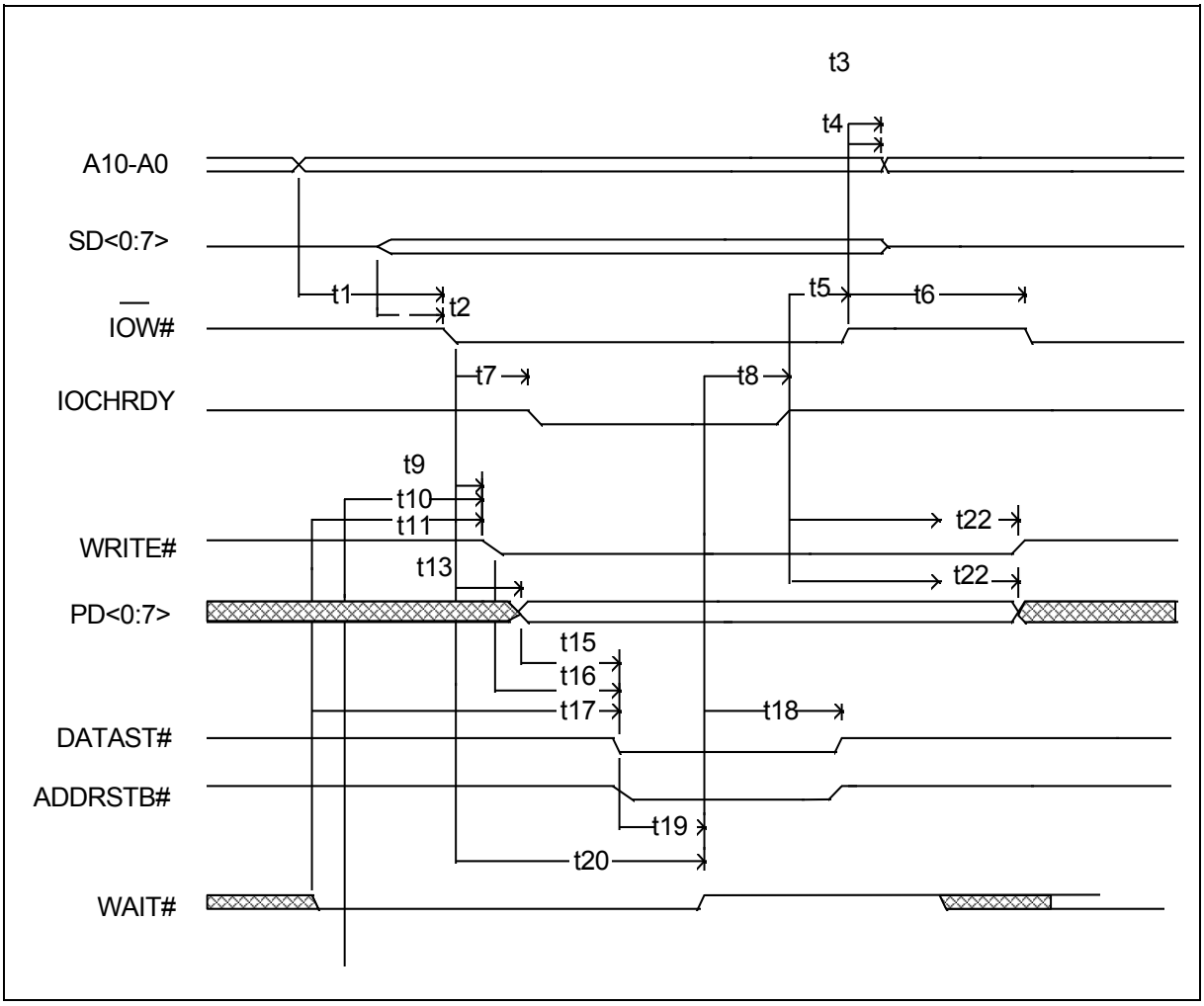

14.3.6 Parallel Port FIFO Timing

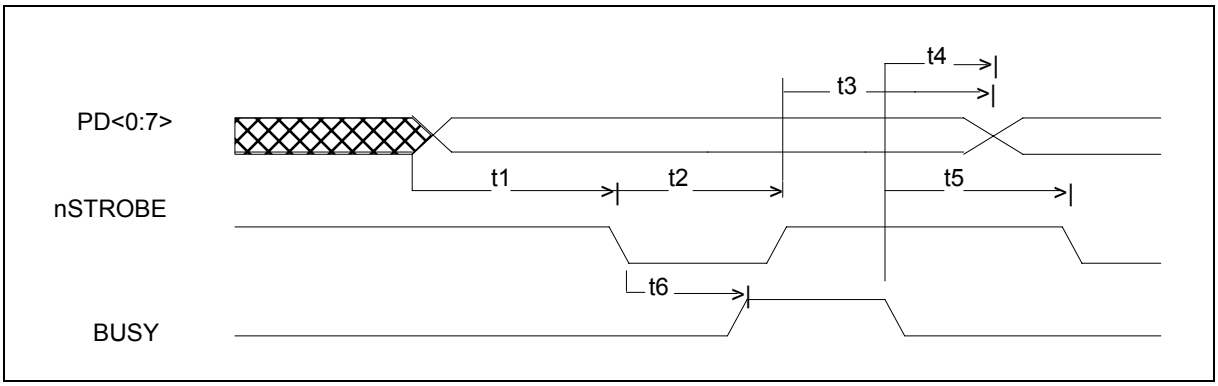

14.3.7 ECP Parallel Port Forward Timing

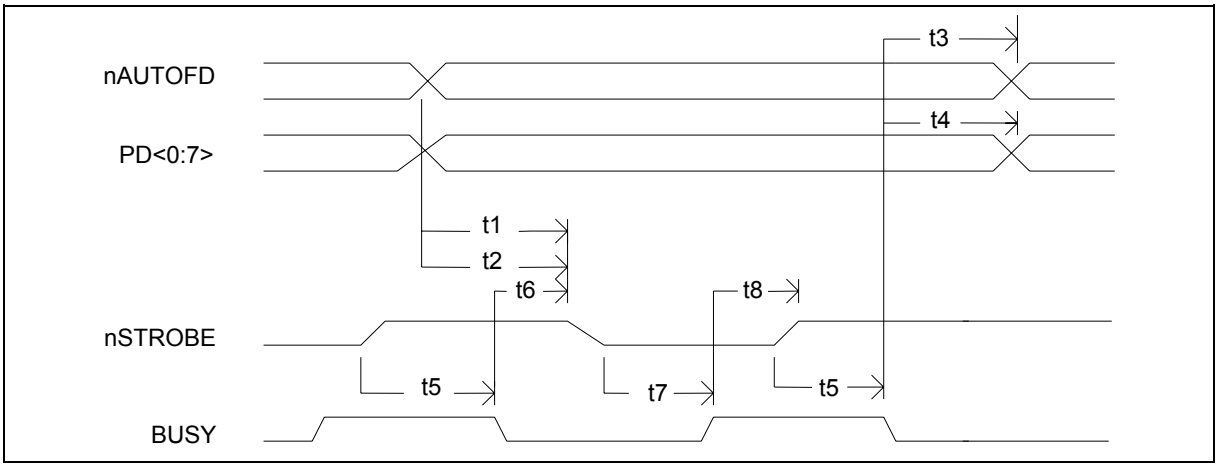

14.3.8 ECP Parallel Port Reverse Timing

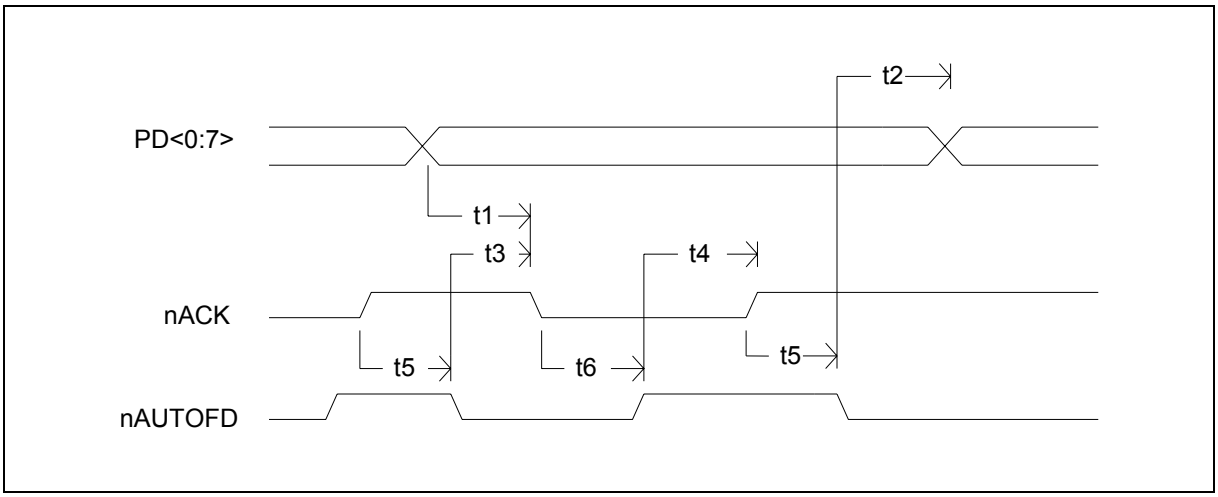

14.4 KBC

14.4.1 Write Cycle Timing

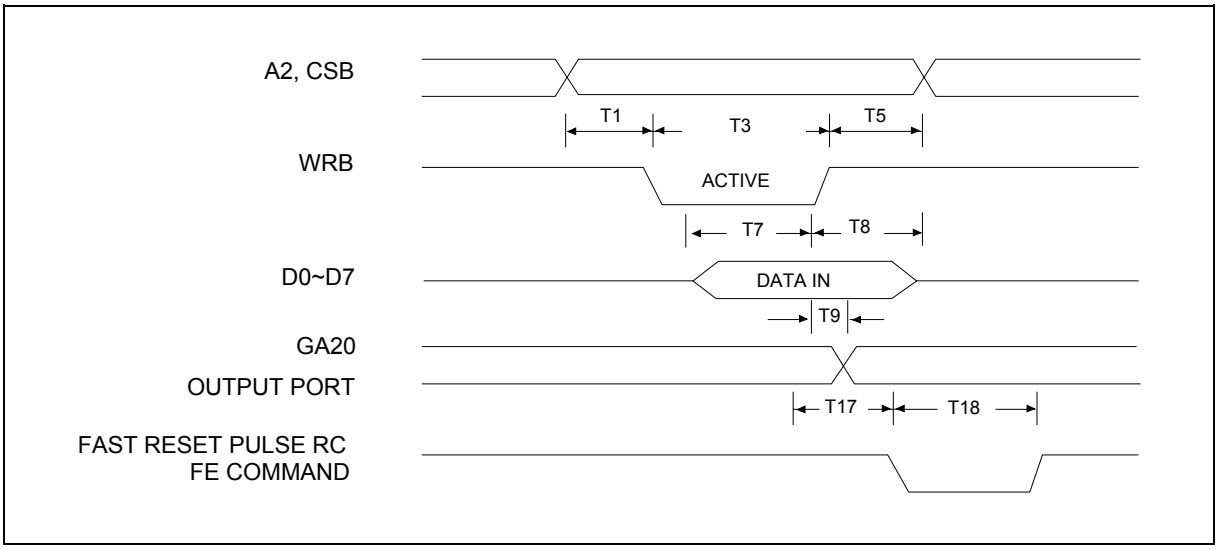

14.4.2 Read Cycle Timing

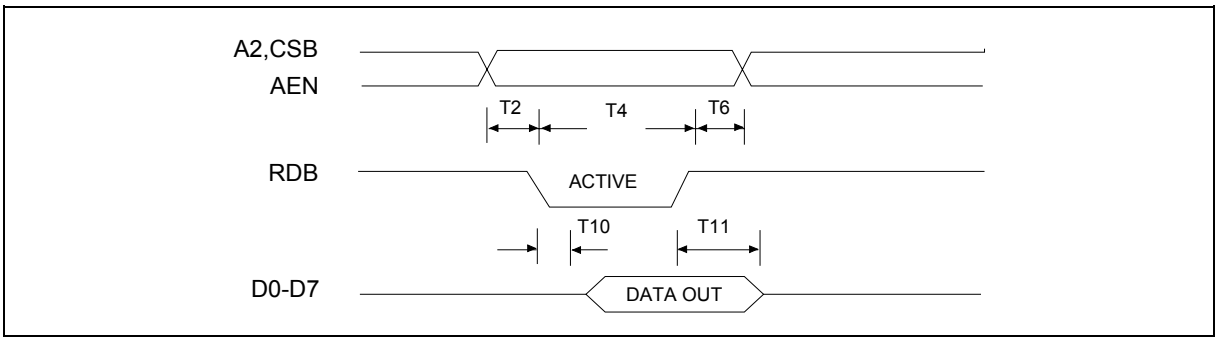

Send Data to K/B

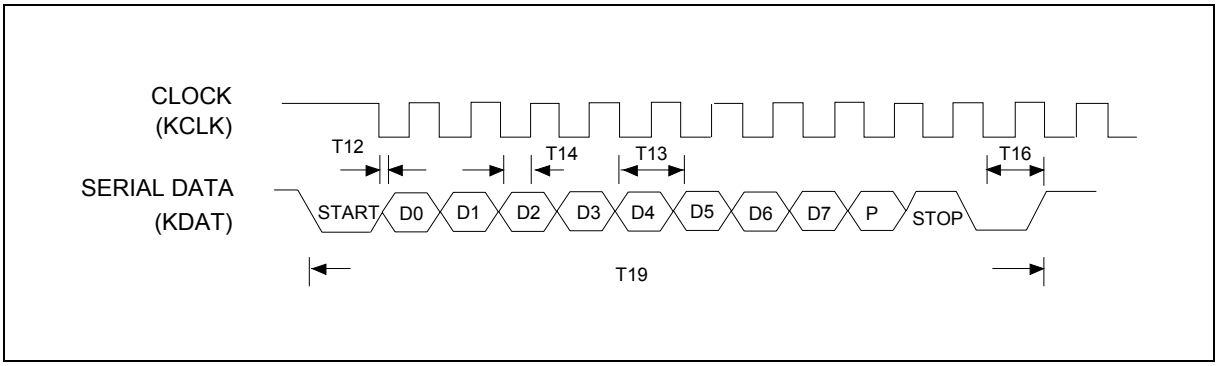

14.4.3 Receive Data from K/B

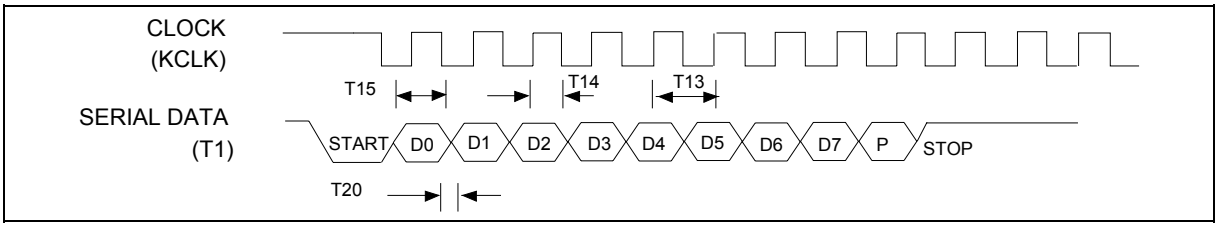

14.4.4 Input Clock

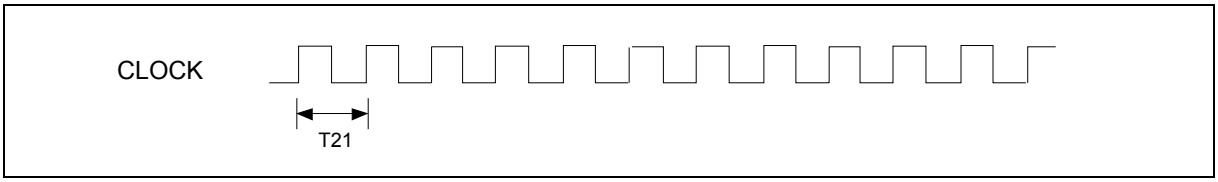

14.4.5 Send Data to Mouse

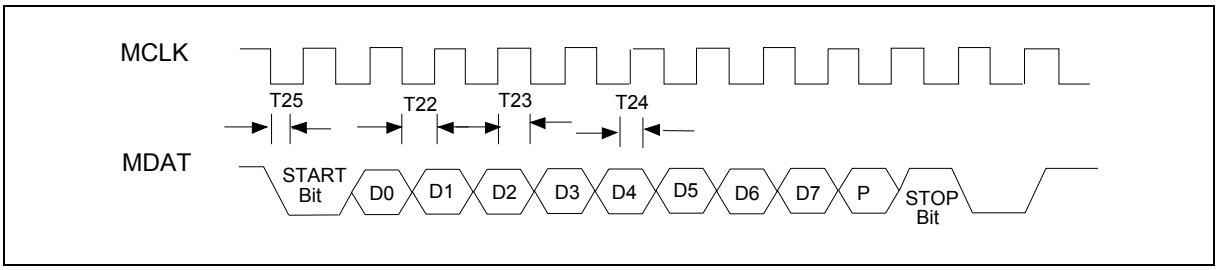

14.4.6 Receive Data from Mouse

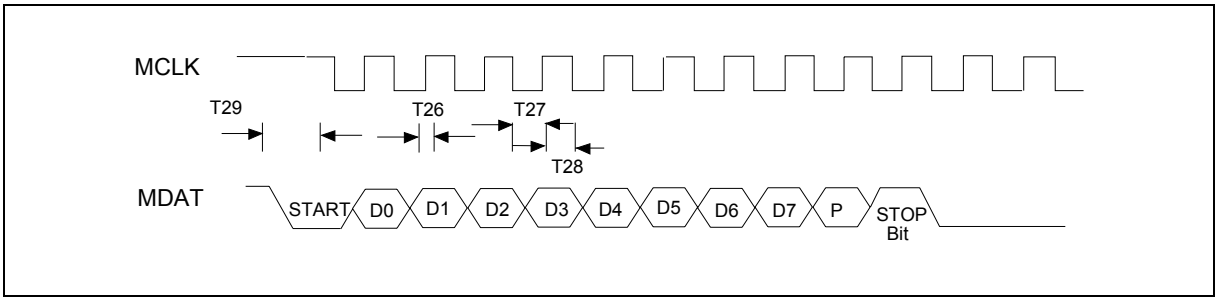

14.5 GPIO Write Timing Diagram

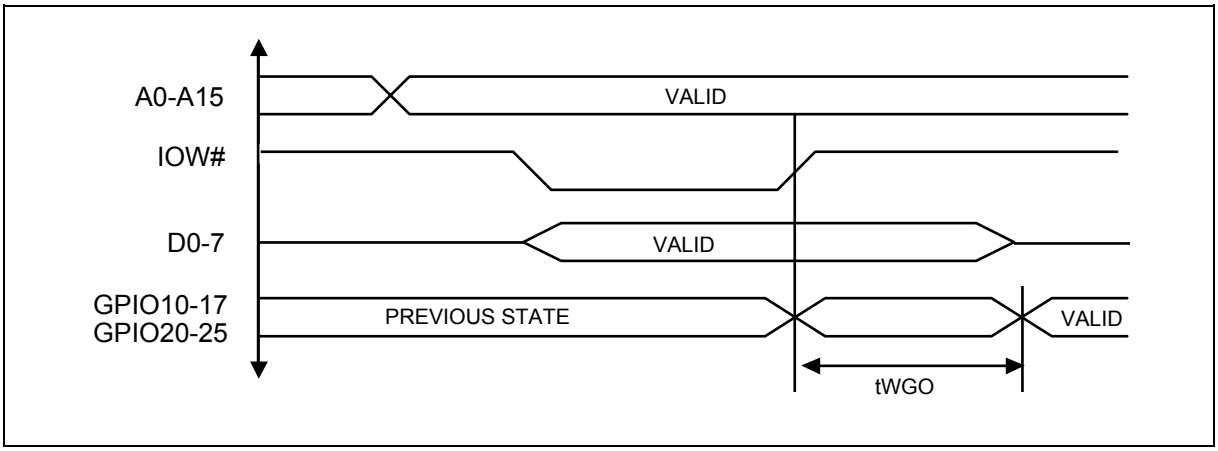

14.5.1 Master Reset (MR) Timing

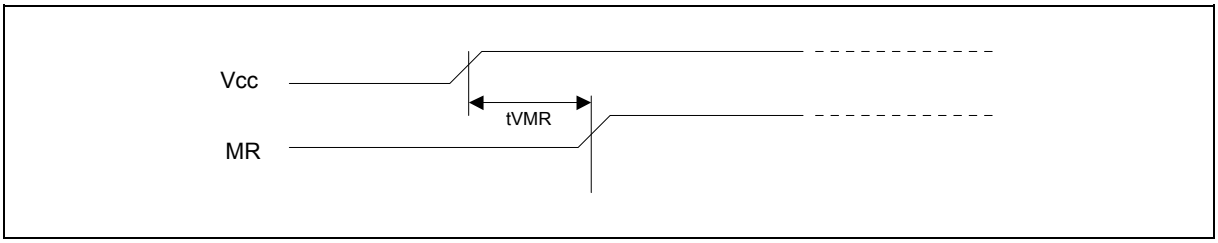

14.6 Keyboard/Mouse Wake-up Timing

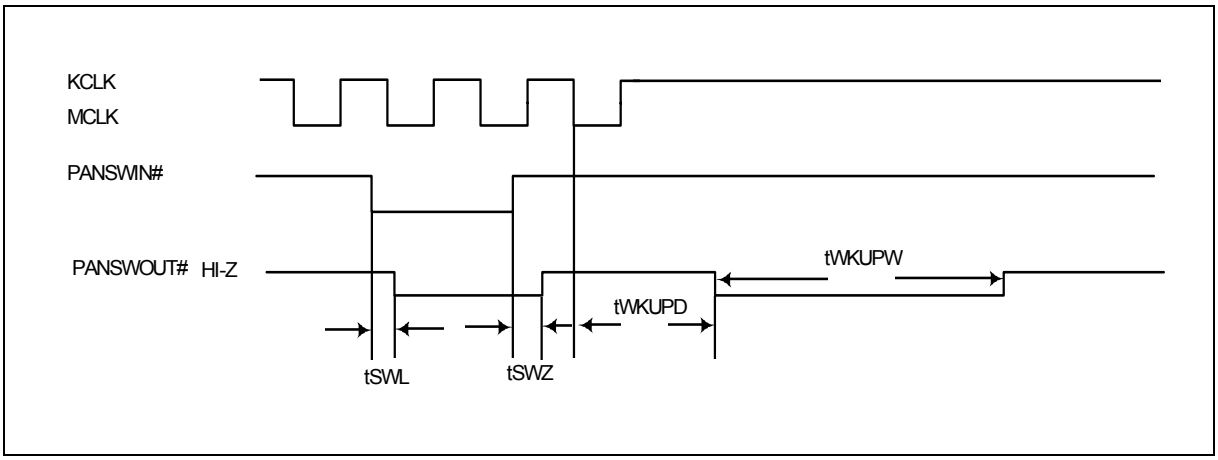

15. APPLICATION CIRCUITS

15.1 Parallel Port Extension FDD

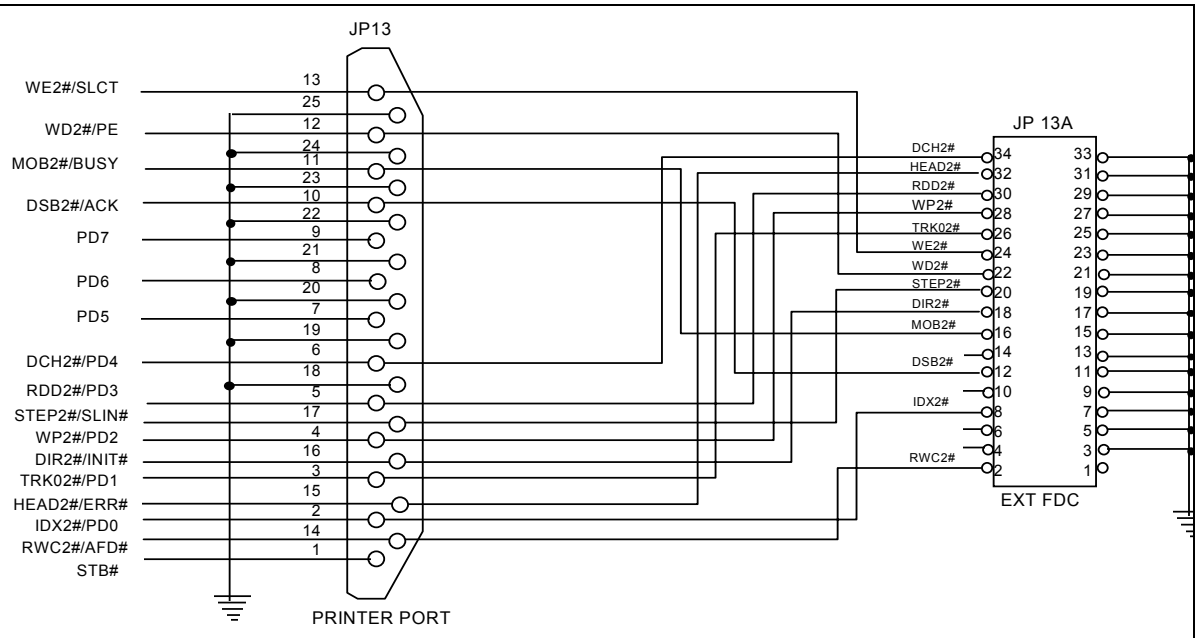

Parallel Port Extension FDD Mode Connection Diagram

15.2 Parallel Port Extension 2FDD

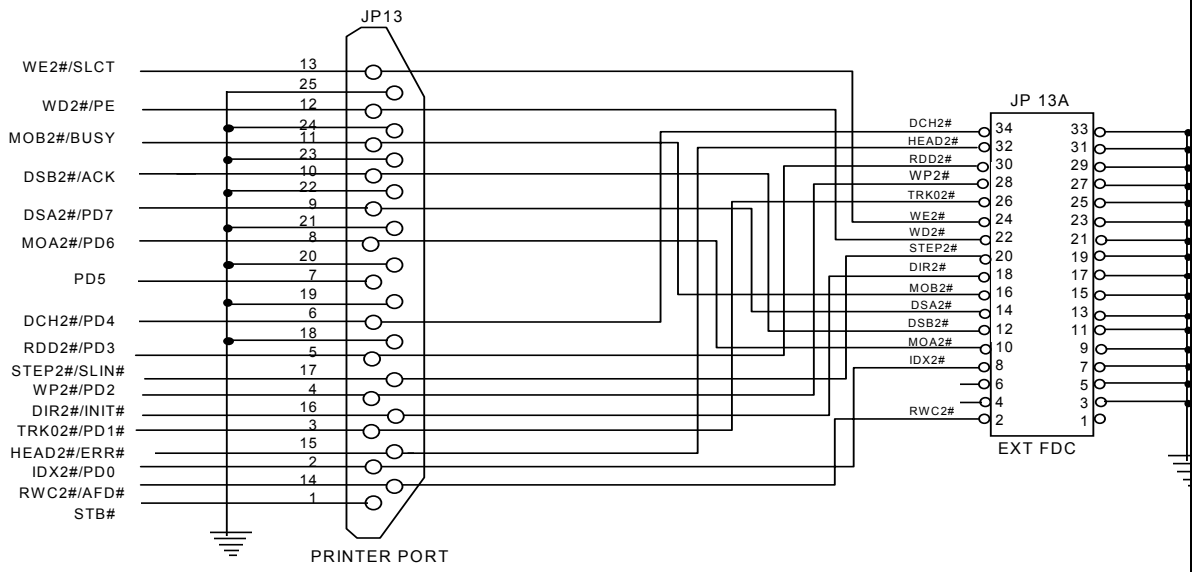

Parallel Port Extension 2FDD Connection Diagram

15.3 Four FDD Mode

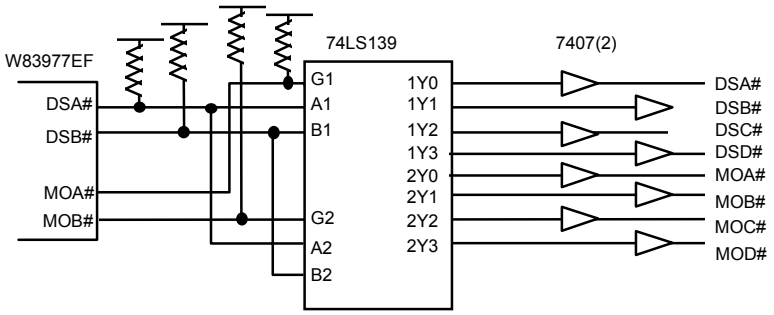

16. ORDERING INFORMATION

PART NO.	KBC FIRMWARE	REMARKS
W83977EF-AW	AMIKEY™-2	with OnNow / security keyboard Wake-Up

17. HOW TO READ THE TOP MARKING

Example: The top marking of W83977EF-AW

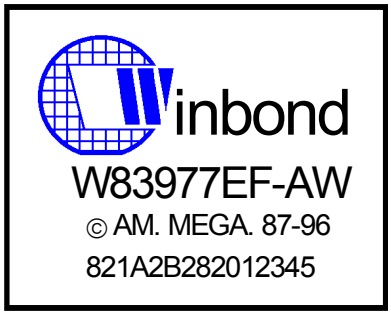

1st line: Winbond logo
2nd line: the type number: W83977EF-AW,W83977EG-AW(Pb-free package)
3rd line: the source of KBC F/W -- American Megatrends Incorporated™
4th line: the tracking code 821 A 2 C 282012345

821: packages made in '98, week 21
A: assembly house ID; A means ASE, S means SPIL.... etc.
2: Winbond internal use.
B: IC revision; A means version A, B means version B
282012345: wafer production series lot number

18. PACKAGE DIMENSIONS

(128-pin PQFP)

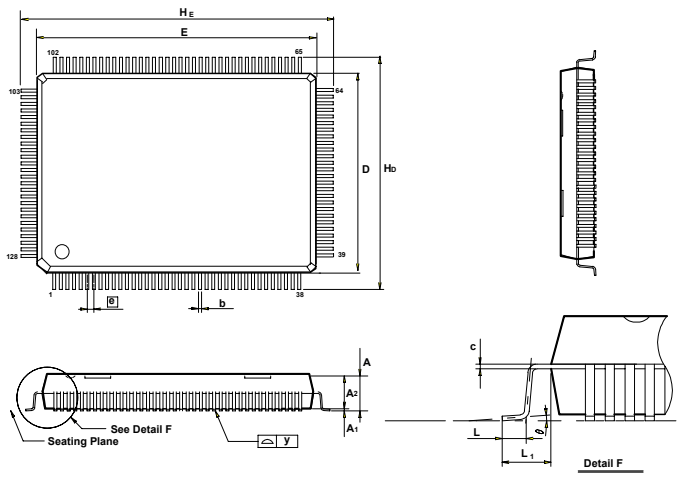

Symbol	Dimension in mm			Dimension in inch		
	Min	Nom	Max	Min	Nom	Max
A_1	0.25	0.35	0.45	0.010	0.014	0.018
A_2	2.57	2.72	2.87	0.101	0.107	0.113
b	0.10	0.20	0.30	0.004	0.008	0.012
c	0.10	0.15	0.20	0.004	0.006	0.008
D	13.90	14.00	14.10	0.547	0.551	0.555
E	19.90	20.00	20.10	0.783	0.787	0.791
e	——	0.50	——	—	0.020	—
H_D	17.00	17.20	17.40	0.669	0.677	0.685
H_E	23.00	23.20	23.40	0.905	0.913	0.921
L	0.65	0.80	0.95	0.025	0.031	0.037
L_1	——	1.60	——	—	0.063	—
y	——	——	0.08	—	—	0.003
θ	0	——	7	0	—	7

Note:

1. Dimension D & E do not include interlead flash.
2. Dimension b does not include dambar protrusion/intrusion .
3. Controlling dimension : Millimeter
4. General appearance spec. should be based on final visual inspection spec.
5. PCB layout please use the "mm".

Important Notice

Winbond products are not designed, intended, authorized or warranted for use as components in systems or equipment intended for surgical implantation, atomic energy control instruments, airplane or spaceship instruments, transportation instruments, traffic signal instruments, combustion control instruments, or for other applications intended to support or sustain life. Further more, Winbond products are not intended for applications wherein failure of Winbond products could result or lead to a situation wherein personal injury, death or severe property or environmental damage could occur.

Winbond customers using or selling these products for use in such applications do so at their own risk and agree to fully indemnify Winbond for any damages resulting from such improper use or sales.

Please note that all data and specifications are subject to change without notice.
All the trademarks of products and companies mentioned in this datasheet belong to their respective owners.