DELPHI SERIES

FEATURES

- High efficiency: 86.5% @3.3V/5A
- Industry standard 1x1 pinout
- Size: 27.9x24.4x8.5mm (1.10”x0.96”x0.33”)
- Fixed frequency operation
- 4:1 ultra wide input voltage range
- Input UVLO
- Output OCP, OVP and OTP
- Monotonic startup into normal and pre-bias loads
- Output voltage trim ±10%
- 2250V isolation and basic insulation
- No minimum load required
- SMT and Through-hole versions
- ISO 9001, TL 9000, ISO 14001, QS9000, OHSAS18001 certified manufacturing facility
- UL/cUL 60950 (US & Canada) Recognized, and TUV (EN60950) certified.
- CE mark meets 73/23/EEC and 93/68/EEC directives

Delphi S36SE, 17W 1x1 Brick Series
DC/DC Power Modules: 18~75V in, 3.3V/5A out

The Delphi S36SE series, 1x1 sized, 18~75Vin, single output, isolated DC/DC converters are the latest offering from a world leader in power systems technology and manufacturing – Delta Electronics, Inc. This product family is available in either a surface mount or through-hole package and provides up to 17 watts of power or 5A of output current (3.3V and below) in a standard 1x1 form factor (1.10”x0.96”x0.33”). The pinout is compatible with the popular industry standard 1x2 sized products. With creative design technology and optimization of component placement, these converters possess outstanding electrical and thermal performance, as well as extremely high reliability under highly stressful operating conditions. The S36SE 3.3V module could provide full output power without any airflow up to 85°C ambient temperature while keeping the component junction temperatures under most derating guidelines. Typical efficiency of 3.3V/5A module is better than 86.5% and all modules are fully protected from abnormal input/output voltage, current, and temperature conditions.

OPTIONS

- Positive, negative, or no On/Off
- Trim pin
- OTP and Output OVP, OCP mode, Auto-restart (default) or latch-up
- Surface mounted pins
- Short pin lengths

APPLICATIONS

- Optical Transport
- Data Networking
- Communications, including Wireless and traditional Telecom
- Servers

DATASHEET

DS_S36SE3R305_02152007

Delta Electronics, Inc.

TECHNICAL SPECIFICATIONS

T_A = 25°C, airflow rate = 300 LFM, V_{in} = 48 Vdc, nominal Vout unless otherwise noted.

PARAMETER	NOTES and CONDITIONS	S36SE3R305 (Standard)			
		Min.	Typ.	Max.	Units
ABSOLUTE MAXIMUM RATINGS					
Input Voltage					
Continuous				80	Vdc
Transient(100ms)	100ms			100	Vdc
Operating Temperature	Refer to Figure 20 for measuring point	-40		123	°C
Storage Temperature		-55		125	°C
Input/Output Isolation Voltage				2250	Vdc
INPUT CHARACTERISTICS					
Operating Input Voltage		18		75	Vdc
Input Under-Voltage Lockout					
Turn-On Voltage Threshold		16	17	18	Vdc
Turn-Off Voltage Threshold		15	16	17	Vdc
Lockout Hysteresis Voltage		0.5	1	1.5	Vdc
Maximum Input Current	100% Load, 18Vin			1.3	A
No-Load Input Current			20		mA
Off Converter Input Current			5		mA
Inrush Current (I^2t)				1	A^2s
Input Reflected-Ripple Current	P-P thru 12μH inductor, 5Hz to 20MHz		8		mA
Input Voltage Ripple Rejection	120 Hz		60		dB
OUTPUT CHARACTERISTICS					
Output Voltage Set Point	Vin=48V, Io=Io.max, Tc=25°C	3.25	3.3	3.35	Vdc
Output Voltage Regulation					
Over Load	Io=Io, min to Io, max		±3	±10	mV
Over Line	Vin=18V to 75V		±3	±10	mV
Over Temperature	Tc=-40°C to 100°C		±33		mV
Total Output Voltage Range	Over sample load, line and temperature	3.2		3.4	V
Output Voltage Ripple and Noise	5Hz to 20MHz bandwidth				
Peak-to-Peak	Full Load, 1μF ceramic, 10μF tantalum		60		mV
RMS	Full Load, 1μF ceramic, 10μF tantalum		10		mV
Operating Output Current Range		0		5	A
Output DC Current-Limit Inception	Output Voltage 10% Low	110	120	130	%
DYNAMIC CHARACTERISTICS					
Output Voltage Current Transient	48V, 10μF Tan & 1μF Ceramic load cap, 0.1A/μs				
Positive Step Change in Output Current	50% Io.max to 75% Io.max		150		mV
Negative Step Change in Output Current	75% Io.max to 50% Io.max		150		mV
Settling Time (within 1% Vout nominal)			300		us
Turn-On Transient					
Start-Up Time, From On/Off Control			16	25	ms
Start-Up Time, From Input			16	25	ms
Maximum Output Capacitance	Full load; 5% overshoot of Vout at startup			1000	μF
EFFICIENCY					
100% Load			86.5		%
60% Load			85.5		%
ISOLATION CHARACTERISTICS					
Input to Output				2250	Vdc
Isolation Resistance		10			MΩ
Isolation Capacitance			1000		pF
FEATURE CHARACTERISTICS					
Switching Frequency			450		kHz
ON/OFF Control, Negative Remote On/Off logic					
Logic Low (Module On)	Von/off	-0.7		0.8	V
Logic High (Module Off)	Von/off	2		18	V
ON/OFF Control, Positive Remote On/Off logic					
Logic Low (Module Off)	Von/off	-0.7		0.8	V
Logic High (Module On)	Von/off	2		18	V
ON/OFF Current (for both remote on/off logic)	Ion/off at Von/off=0.0V		0.25		mA
Leakage Current (for both remote on/off logic)	Logic High, Von/off=15V			30	uA
Output Voltage Trim Range	Across Trim Pin & +Vo or –Vo, Pout≦max rated	-10%		10%	%
Output Over-Voltage Protection	Over full temp range;	3.79		5	V
GENERAL SPECIFICATIONS					
MTBF	Io=80% of Io, max; Ta=25°C, 300LFM		TBD		M hours
Weight			9		grams
Over-Temperature Shutdown	Refer to Figure 20 for measuring point		128		°C

ELECTRICAL CHARACTERISTICS CURVES

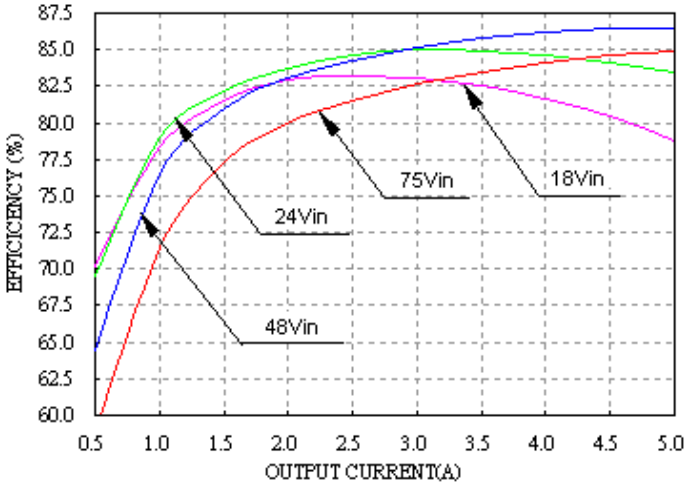

Figure 1: *Efficiency vs. load current for minimum, nominal, and maximum input voltage at 25°C.*

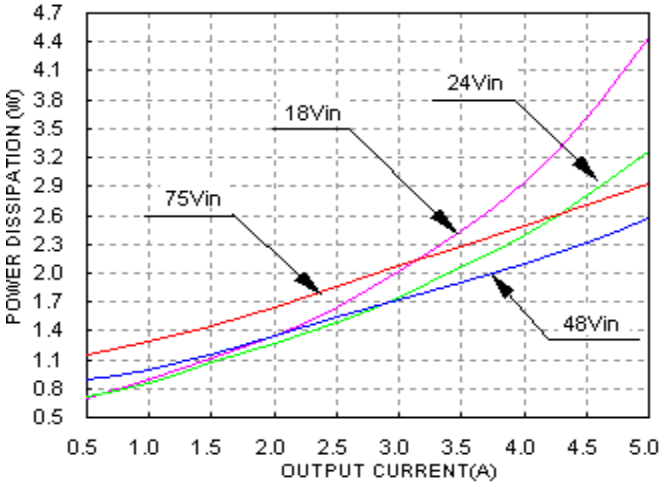

Figure 2: *Power dissipation vs. load current for minimum, nominal, and maximum input voltage at 25°C.*

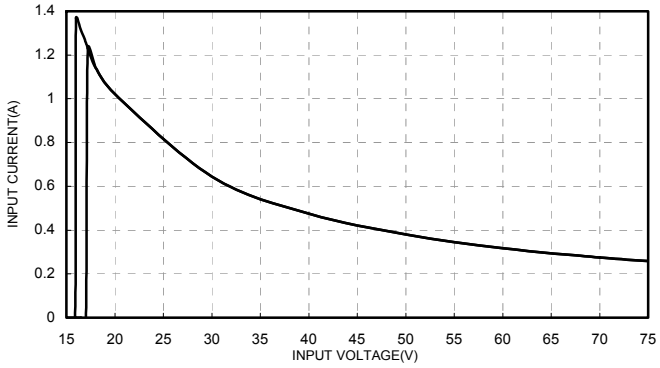

Figure 3: *Typical full load input characteristics at room temperature.*

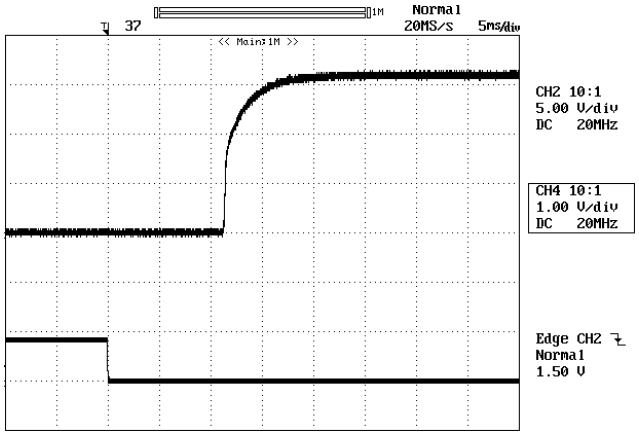

Figure 4: *(For negative remote on/off logic) Turn-on transient at full rated load current (5 ms/div). Vin=48V. Top Trace: Vout, 1V/div; Bottom Trace: ON/OFF input, 5V/div.*

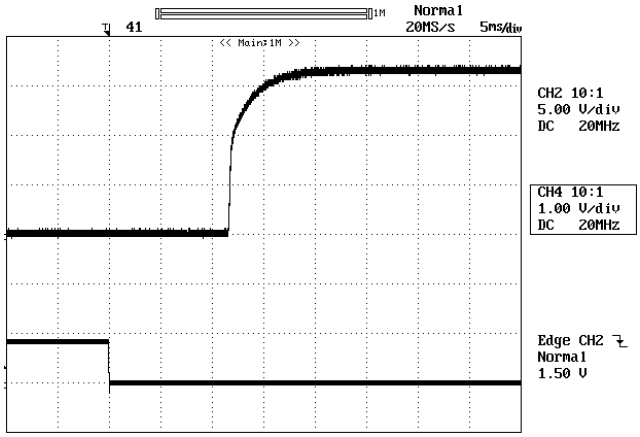

Figure 5: *(For negative remote on/off logic) Turn-on transient at zero load current (5 ms/div). Vin=48V. Top Trace: Vout, 1V/div, Bottom Trace: ON/OFF input, 5V/div.*

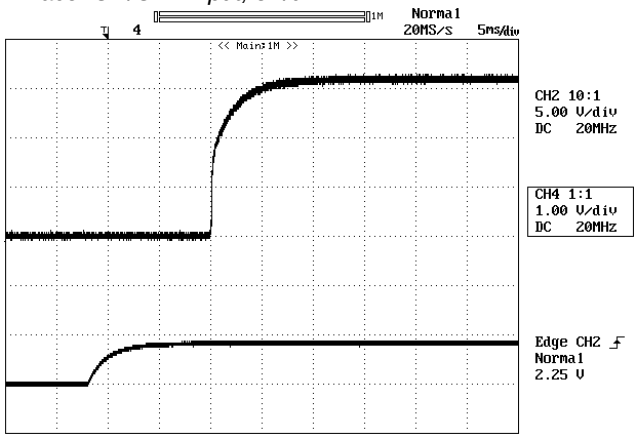

Figure 6: *(For positive remote on/off logic) Turn-on transient at full rated load current (5 ms/div). Vin=48V. Top Trace: Vout, 1V/div; Bottom Trace: ON/OFF input, 5V/div.*

ELECTRICAL CHARACTERISTICS CURVES (CON.)

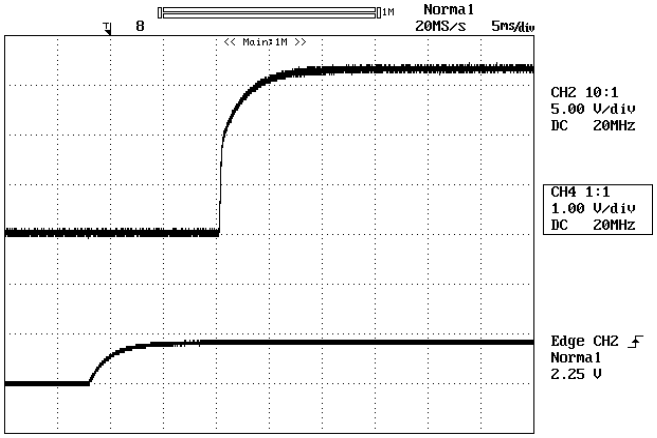

Figure 7: *(For positive remote on/off logic)Turn-on transient at zero load current (5 ms/div). Vin=48V. Top Trace: Vout, 1V/div; Bottom Trace: ON/OFF input, 5V/div.*

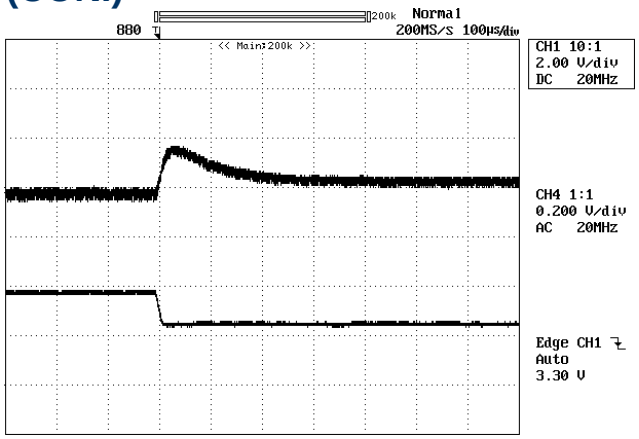

Figure 8: *Output voltage response to step-change in load current (75%-50% of Io, max; di/dt = 0.1A/µs). Load cap: 10µF tantalum capacitor and 1µF ceramic capacitor. Top Trace: Vout (200mV/div, 100us/div), Bottom Trace: Iout (2A/div). Scope measurement should be made using a BNC cable (length shorter than 20 inches). Position the load between 51 mm to 76 mm (2 inches to 3 inches) from the module.*

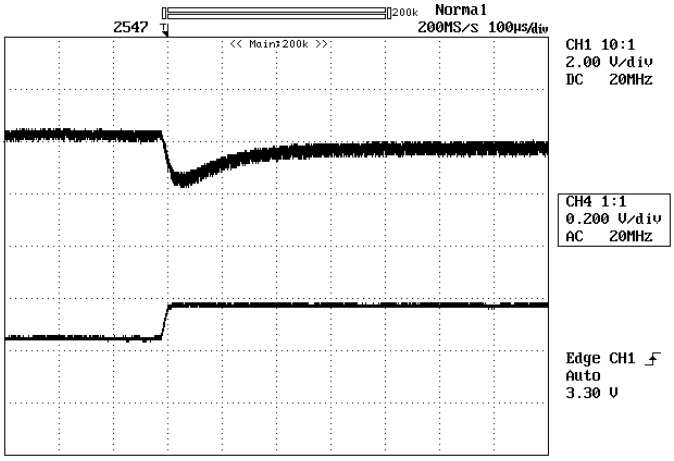

Figure 9: *Output voltage response to step-change in load current (50%-75% of Io, max; di/dt = 0.1A/µs). Load cap: 10µF tantalum capacitor and 1µF ceramic capacitor. Top Trace: Vout (200mV/div, 100us/div), Bottom Trace: Iout (2A/div). Scope measurement should be made using a BNC cable (length shorter than 20 inches). Position the load between 51 mm to 76 mm (2 inches to 3 inches) from the module.*

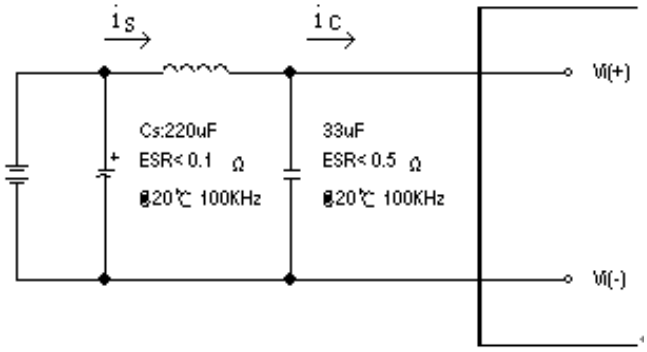

Figure 10: *Test set-up diagram showing measurement points for Input Terminal Ripple Current and Input Reflected Ripple Current. Note: Measured input reflected-ripple current with a simulated source Inductance (L_{TEST}) of 12 µH. Capacitor Cs offset possible battery impedance. Measure current as shown below.*

ELECTRICAL CHARACTERISTICS CURVES

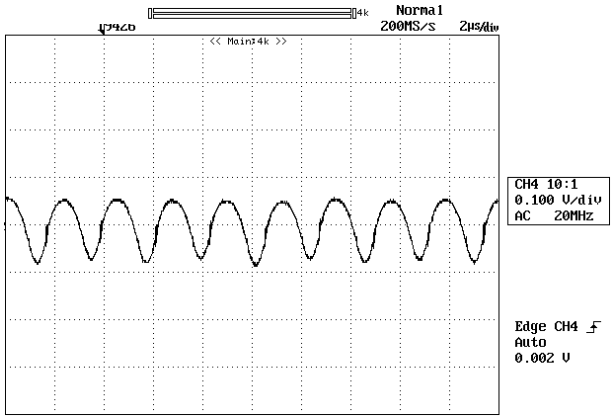

Figure 11: *Input Terminal Ripple Current, i_c, at full rated output current and nominal input voltage with 12µH source impedance and 33µF electrolytic capacitor (100mA/div, 2us/div)*

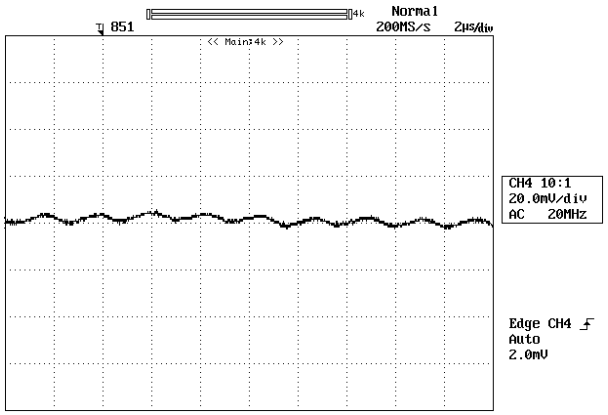

Figure 12: *Input reflected ripple current, i_s, through a 12µH source inductor at nominal input voltage and rated load current (20 mA/div, 2us/div)*

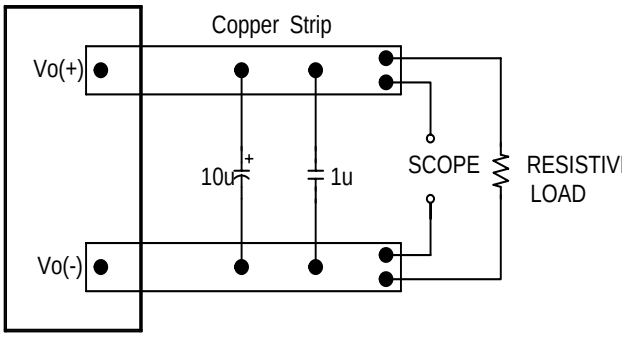

Figure 13: *Output voltage noise and ripple measurement test setup*

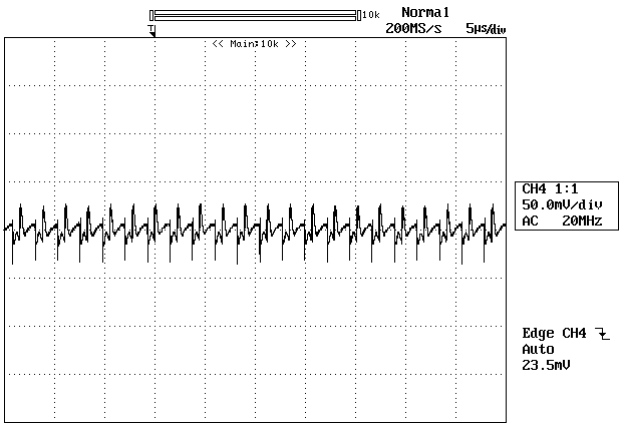

Figure 14: *Output voltage ripple at nominal input voltage and rated load current (Io=5A)(50 mV/div, 5us/div).Load capacitance: 1µF ceramic capacitor and 10µF tantalum capacitor. Bandwidth: 20 MHz. Scope measurements should be made using a BNC cable (length shorter than 20 inches). Position the load between 51 mm to 76 mm (2 inches to 3 inches) from the module*

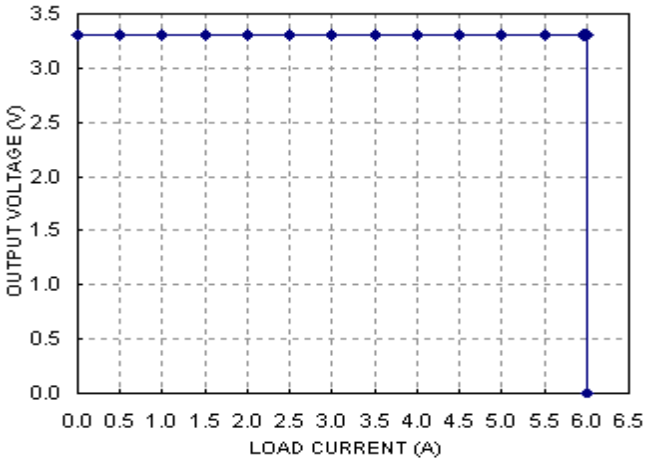

Figure 15: *Output voltage vs. load current showing typical current limit curves and converter shutdown points*

DESIGN CONSIDERATIONS

Input Source Impedance

The impedance of the input source connecting to the DC/DC power modules will interact with the modules and affect the stability. A low ac-impedance input source is recommended. If the source inductance is more than a few μH, we advise adding a 10 to 100 μF electrolytic capacitor (ESR < 0.7 Ω at 100 kHz) mounted close to the input of the module to improve the stability.

Layout and EMC Considerations

Delta's DC/DC power modules are designed to operate in a wide variety of systems and applications. For design assistance with EMC compliance and related PWB layout issues, please contact Delta's technical support team. An external input filter module is available for easier EMC compliance design. Application notes to assist designers in addressing these issues are pending to release.

Safety Considerations

The power module must be installed in compliance with the spacing and separation requirements of the end-user's safety agency standard, i.e., UL60950, CAN/CSA-C22.2 No. 60950-00 and EN60950: 2000 and IEC60950-1999, if the system in which the power module is to be used must meet safety agency requirements.

Basic insulation based on 75 Vdc input is provided between the input and output of the module for the purpose of applying insulation requirements when the input to this DC-to-DC converter is identified as TNV-2 or SELV. An additional evaluation is needed if the source is other than TNV-2 or SELV.

When the input source is SELV circuit, the power module meets SELV (safety extra-low voltage) requirements. If the input source is a hazardous voltage which is greater than 60 Vdc and less than or equal to 75 Vdc, for the module's output to meet SELV requirements, all of the following must be met:

- The input source must be insulated from the ac mains by reinforced or double insulation.
- The input terminals of the module are not operator accessible.
- If the metal baseplate is grounded, one Vi pin and one Vo pin shall also be grounded.
- A SELV reliability test is conducted on the system where the module is used, in combination with the module, to ensure that under a single fault, hazardous voltage does not appear at the module's output.

When installed into a Class II equipment (without grounding), spacing consideration should be given to the end-use installation, as the spacing between the module and mounting surface have not been evaluated.

The power module has extra-low voltage (ELV) outputs when all inputs are ELV.

This power module is not internally fused. To achieve optimum safety and system protection, an input line fuse is highly recommended. The safety agencies require a normal-blow fuse with 5A maximum rating to be installed in the ungrounded lead. A lower rated fuse can be used based on the maximum inrush transient energy and maximum input current.

Soldering and Cleaning Considerations

Post solder cleaning is usually the final board assembly process before the board or system undergoes electrical testing. Inadequate cleaning and/or drying may lower the reliability of a power module and severely affect the finished circuit board assembly test. Adequate cleaning and/or drying is especially important for un-encapsulated and/or open frame type power modules. For assistance on appropriate soldering and cleaning procedures, please contact Delta's technical support team.

FEATURES DESCRIPTIONS

Over-Current Protection

The modules include an internal output over-current protection circuit, which will endure current limiting for an unlimited duration during output overload. If the output current exceeds the OCP set point, the modules will automatically shut down, and enter hiccup mode or latch mode, which is optional.

For hiccup mode, the module will try to restart after shutdown. If the overload condition still exists, the module will shut down again. This restart trial will continue until the overload condition is corrected.

For latch mode, the module will latch off once it shutdown. The latch is reset by either cycling the input power or by toggling the on/off signal for one second.

Over-Voltage Protection

The modules include an internal output over-voltage protection circuit, which monitors the voltage on the output terminals. If this voltage exceeds the over-voltage set point, the module will shut down, and enter in hiccup mode or latch mode, which is optional.

For hiccup mode, the module will try to restart after shutdown. If the overload condition still exists, the module will shut down again. This restart trial will continue until the over-voltage condition is corrected.

For latch mode, the module will latch off once it shutdown. The latch is reset by either cycling the input power or by toggling the on/off signal for one second.

Over-Temperature Protection

The over-temperature protection consists of circuitry that provides protection from thermal damage. If the temperature exceeds the over-temperature threshold the module will shut down, and enter in hiccup mode or latch mode, which is optional.

For auto-restart mode, the module will monitor temperature after shut down. Once the temperature is within the specification, the module will be auto-restarted.

For latch mode, the module will latch off once it shutdown. The latch is reset by either cycling the input power or by toggling the on/off signal for one second.

Remote On/Off

The remote on/off feature on the module can be either negative or positive logic. Negative logic turns the module on during a logic low and off during a logic high. Positive logic turns the modules on during a logic high and off during a logic low.

Remote on/off can be controlled by an external switch between the on/off terminal and the Vi(-) terminal. The switch can be an open collector or open drain.

For negative logic if the remote on/off feature is not used, please short the on/off pin to Vi(-). For positive logic if the remote on/off feature is not used, please leave the on/off pin floating.

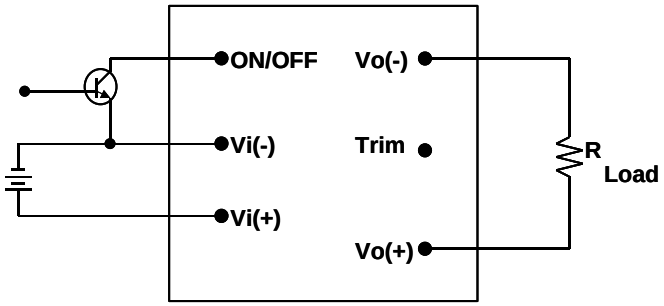

Figure 16: *Remote on/off implementation*

FEATURES DESCRIPTIONS (CON.)

Output Voltage Adjustment

To increase or decrease the output voltage set point, the modules may be connected with an external resistor between the TRIM pin and either the Vo(+) or Vo(-). The TRIM pin should be left open if this feature is not used.

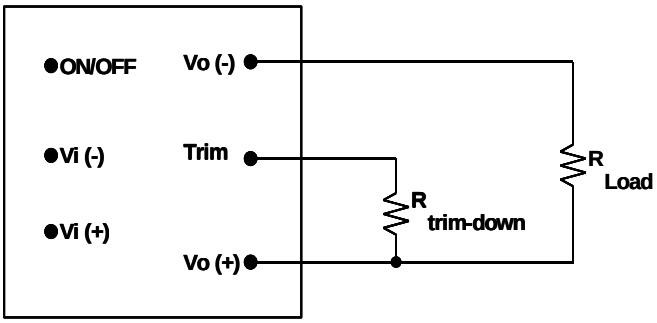

Figure 17: *Circuit configuration for trim-down (decrease output voltage)*

If the external resistor is connected between the TRIM and Vo(+) pins, the output voltage set point decreases (Fig. 17). The external resistor value required to obtain an output voltage change from 3.3V to the desired Vo_adj is defined as:

$$\text{Rtrim_down} = \frac{(\text{Vo_adj} - 2.5)\cdot 5110}{3.3 - \text{Vo_adj}} - 2050$$

Ex. When Trim-down -10%

Vo_adj=3.3V×(1-10%)=2.97V

$$\text{Rtrim_down} = \frac{(2.97 - 2.5)\cdot 5110}{3.3 - 2.97} - 2050$$

$$\text{Rtrim_down} = 5.228\times 10^{3} \text{ ohm}$$

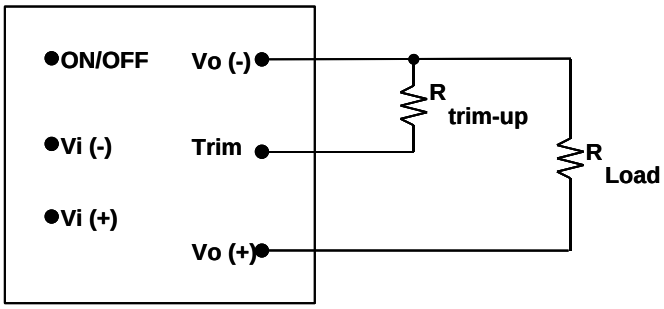

Figure 18: *Circuit configuration for trim-up (increase output voltage)*

If the external resistor is connected between the TRIM and Vo(-) the output voltage set point increases (Fig. 18). The external resistor value required to obtain an output voltage change from 3.3V to the desired Vo_adj is defined as:

$$\text{Rtrim_up} = \frac{2.5\cdot 5110}{\text{Vo_adj} - 3.3} - 2050$$

Ex. When Trim-up +10%

Vo_adj=3.3V×(1+10%)=3.63V

$$\text{Rtrim_up} = \frac{2.5\cdot 5110}{3.63 - 3.3} - 2050$$

$$\text{Rtrim_up} = 3.666\times 10^{4} \text{ ohm}$$

When using trim function, the output voltage of the module is usually increased, which increases the power output of the module with the same output current.

Care should be taken to ensure that the maximum output power of the module remains at or below the maximum rated power.

THERMAL CONSIDERATIONS

Thermal management is an important part of the system design. To ensure proper, reliable operation, sufficient cooling of the power module is needed over the entire temperature range of the module. Convection cooling is usually the dominant mode of heat transfer.

Hence, the choice of equipment to characterize the thermal performance of the power module is a wind tunnel.

Thermal Testing Setup

Delta's DC/DC power modules are characterized in heated vertical wind tunnels that simulate the thermal environments encountered in most electronics equipment. This type of equipment commonly uses vertically mounted circuit cards in cabinet racks in which the power modules are mounted.

The following figure shows the wind tunnel characterization setup. The power module is mounted on a test PWB and is vertically positioned within the wind tunnel. The space between the neighboring PWB and the top of the power module is constantly kept at 6.35mm (0.25").

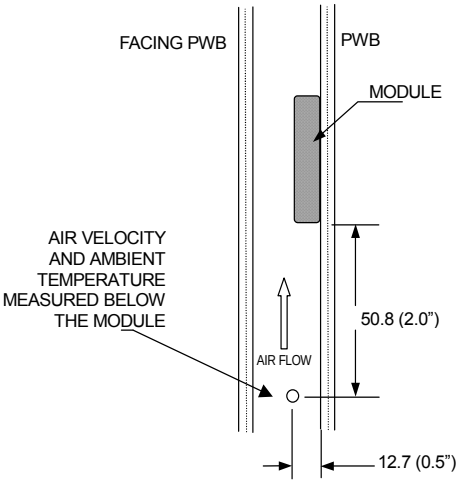

Note: Wind Tunnel Test Setup Figure Dimensions are in millimeters and (Inches)

Figure 19: *Wind tunnel test setup*

Thermal Derating

Heat can be removed by increasing airflow over the module. To enhance system reliability, the power module should always be operated below the maximum operating temperature. If the temperature exceeds the maximum module temperature, reliability of the unit may be affected.

THERMAL CURVES

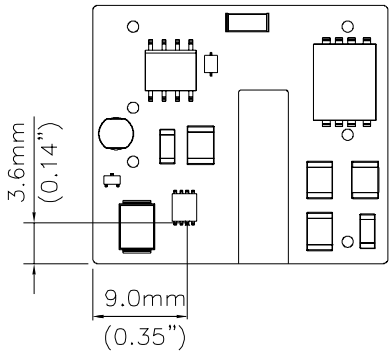

Figure 20: *Temperature measurement location*
The allowed maximum hot spot temperature is defined at 123℃.

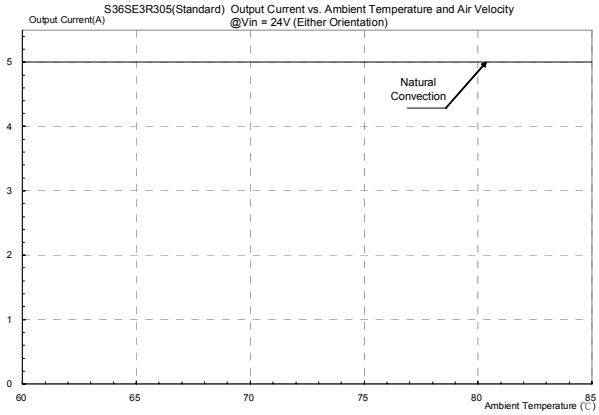

Figure 21: *Output current vs. ambient temperature and air velocity@ V_{in}=24V (Either Orientation)*

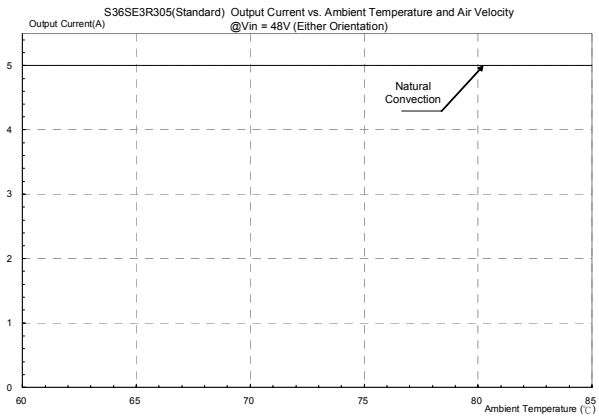

Figure 21: *Output current vs. ambient temperature and air velocity@ V_{in}=48V (Either Orientation)*

PICK AND PLACE LOCATION

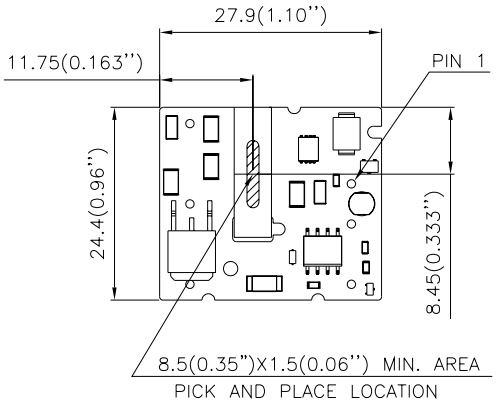

NOTES:
ALL DIMENSIONS ARE IN MILLIMETERS AND (INCHES)
TOLERANCES: X.Xmm±0.5mm(X.XX in.±0.02 in.)
X.XXmm±0.25mm(X.XXX in.±0.010 in.)

SURFACE-MOUNT TAPE & REEL

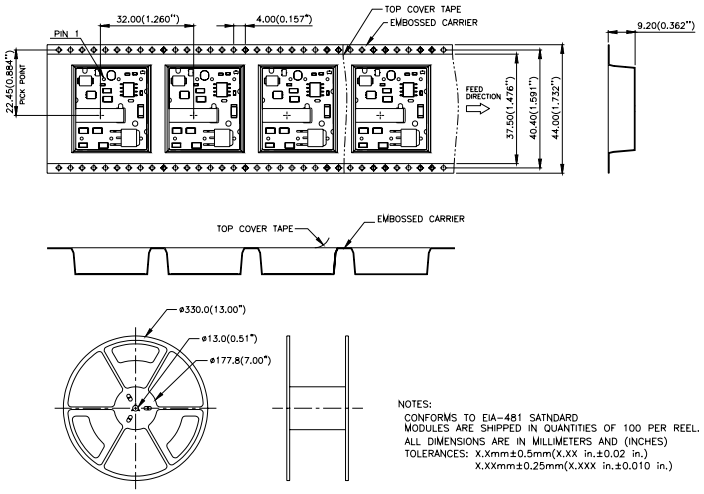

NOTES:
CONFORMS TO EIA-481 SATNDARD
MODULES ARE SHIPPED IN QUANTITIES OF 100 PER REEL.
ALL DIMENSIONS ARE IN MILLIMETERS AND (INCHES)
TOLERANCES: X.Xmm±0.5mm(X.XX in.±0.02 in.)
X.XXmm±0.25mm(X.XXX in.±0.010 in.)

RECOMMENDED PAD LAYOUT (SMD)

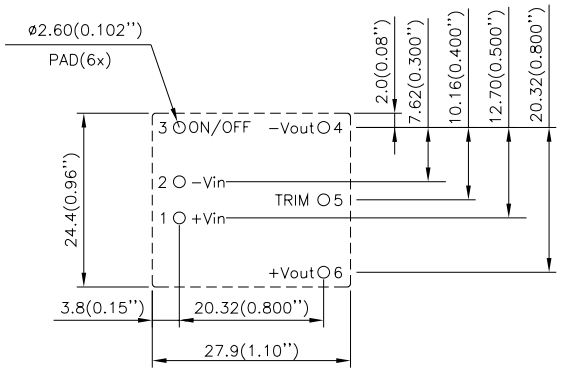

RECOMMAND P.W.B PAD LAYOUT

NOTES:
DIMENSIONS ARE IN MILLIMETERS AND (INCHES)
TOLERANCES: X.Xmm±0.5mm(X.XX in.±0.02 in.)
X.XXmm±0.25mm(X.XXX in.±0.010 in.)

LEADED (Sn/Pb) PROCESS RECOMMEND TEMP. PROFILE

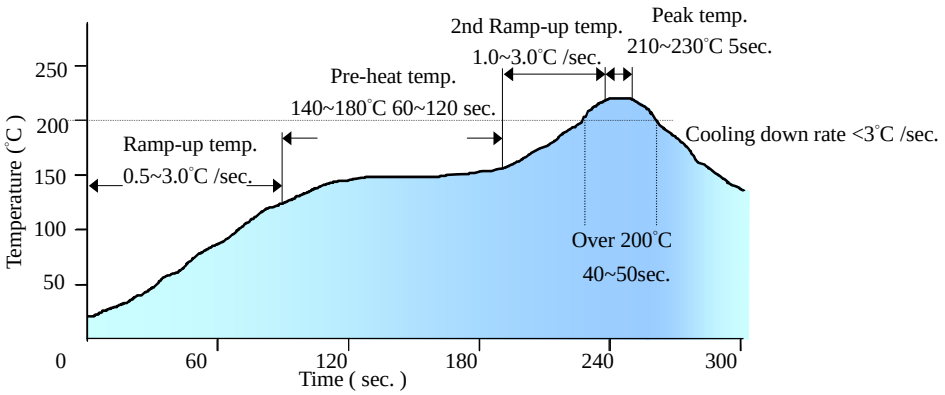

Note: The temperature refers to the pin of S36SE, measured on the pin +Vout joint.

LEAD FREE (SAC) PROCESS RECOMMEND TEMP. PROFILE

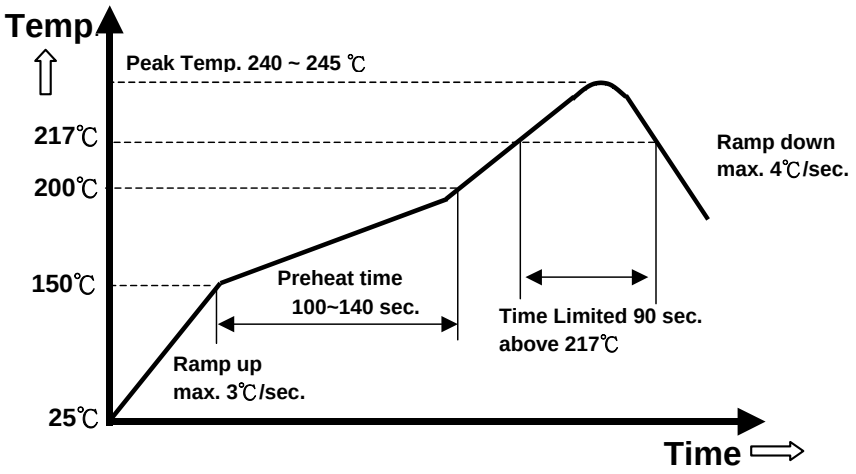

Note: The temperature refers to the pin of S36SE, measured on the pin +Vout joint.

MECHANICAL DRAWING

Surface-mount module

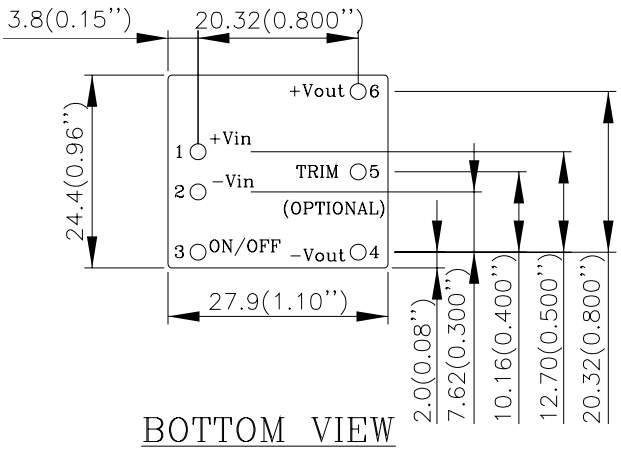

Through-hole module

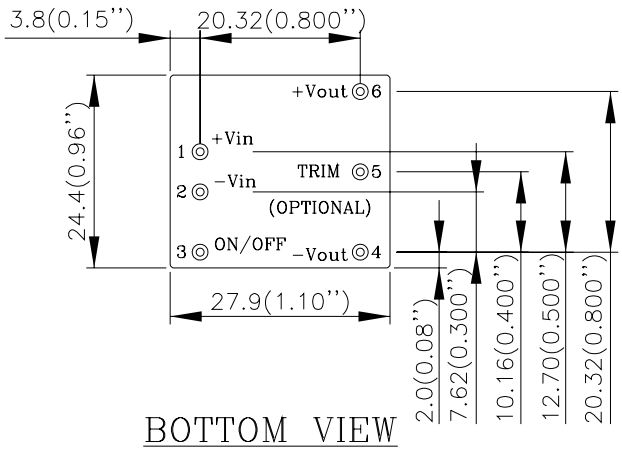

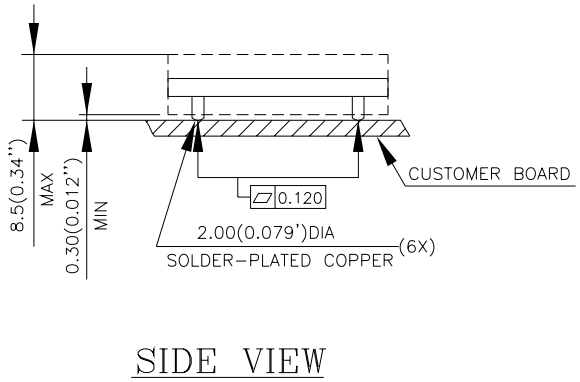

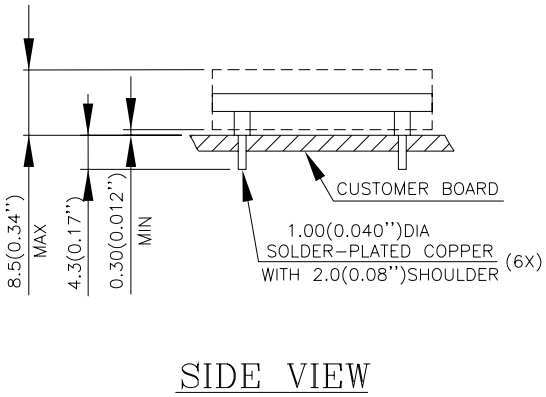

NOTES:
DIMENSIONS ARE IN MILLIMETERS AND (INCHES)
TOLERANCES: X.Xmm±0.5mm(X.XX in.±0.02 in.)
X.XXmm±0.25mm(X.XXX in.±0.010 in.)

Pin No.	Name	Function
1	+Vin	Positive input voltage
2	-Vin	Negative input voltage
3	ON/OFF	Remote ON/OFF
4	-Vout	Negative output voltage
5	TRIM (Optional)	Output voltage trim (Optional)
6	+Vout	Positive output voltage

PART NUMBERING SYSTEM

S	36	S	E	3R3	05	N	R	F	A
Product Type	**Input Voltage**	**Number of Outputs**	**Product Series**	**Output Voltage**	**Output Current**	**ON/OFF Logic**	**Pin Length/Type**		**Option Code**
S - Small Power	18V~75V	S - Single	1x1, 17W	3R3 - 3.3V	05 - 5A	N - Negative P - Positive E - No remote on/off control pin	R - 0.170” N - 0.145” K - 0.110” M - SMD	F- RoHS 6/6 (Lead Free)	A - No trim pin B - With trim pin

MODEL LIST

MODEL NAME	INPUT		OUTPUT		EFF @ 100% LOAD
S36SE3R305NRFA	18V~75V	1.3A	3.3V	5A	86.5%
S36SE05003NRFA	18V~75V	1.1A	5.0V	3A	83.5%
S36SE12001NRFA	18V~75V	1.1A	12V	1.3A	87.0%

Note:

1. Default remote on/off logic is negative;
2. Default pin length is 0.170”;
3. Default OTP and output OVP, OCP mode is auto-restart
4. Default is no trim pin;
5. For different options, please refer to part numbering system above or contact your local sales office.

CONTACT: www.delta.com.tw/dcdc

USA:
Telephone:
East Coast: (888) 335 8201
West Coast: (888) 335 8208
Fax: (978) 656 3964
Email: DCDC@delta-corp.com

Europe:
Phone: +41 31 998 53 11
Fax: +41 31 998 53 53
Email: DCDC@delta-es.com

Asia & the rest of world:
Telephone: +886 3 4526107 ext 6220
Fax: +886 3 4513485
Email: DCDC@delta.com.tw

WARRANTY

Delta offers a two (2) year limited warranty. Complete warranty information is listed on our web site or is available upon request from Delta.

Information furnished by Delta is believed to be accurate and reliable. However, no responsibility is assumed by Delta for its use, nor for any infringements of patents or other rights of third parties, which may result from its use. No license is granted by implication or otherwise under any patent or patent rights of Delta. Delta reserves the right to revise these specifications at any time, without notice.