Host Controlled Analog Front End for 3 to 6 Series Cell Lithium-Ion/ Polymer Battery Protection and Gas Gauging Applications

Check for Samples: bq76925

FEATURES

- **Analog Interface for Host cell Measurement**
  - **Cell Input MUX, Level Shifter and Scaler**
  - **1.5 / 3.0 V Low-Drift, Calibrated Reference Allows Accurate Analog to Digital Conversions**
- **Analog Interface for Host Current Measurement**
  - **Variable Gain Current Sense Amplifier Capable of Operation with 1 mΩ Sense Resistor**
- **Switchable Thermistor Bias output for Host Temperature Measurements**
- **Overcurrent Comparator with Dynamically Adjustable Threshold**
  - **Alerts Host to Potential Overcurrent Faults**
  - **May be used to Wake up Host on Load Connect**
- **Integrated Cell Balancing FETs**
  - **Individual Host Control**
  - **50 mA per-cell Balancing Current**
- **Supports Cell Sense-line Open Wire Detection**
- **Integrated 3.3 V Regulator for Powering Micro-controller and/or LEDs**
- **I^2C Interface for Host Communications**
  - **Optional Packet CRC for Robust Operation**
- **Supply Voltage Range From 4.2 to 26.4 V**
- **Low Power Consumption**
  - **40 μA Typical in Normal Mode**
  - **1.5 μA Maximum in Sleep Mode**
- **20-pin TSSOP or 24-pin QFN Package**

APPLICATIONS

- **Primary Protection in Li-Ion Battery Packs**
  - **Cordless Power Tools**
  - **Light Electric Vehicles (E-Bike, Scooter, etc.)**
  - **UPS Systems**
  - **Medical Equipment**
  - **Portable Test Equipment**

DESCRIPTION

The bq76925 Host controlled analog front end (AFE) is part of a complete pack monitoring, balancing and protection system for 3, 4, 5 or 6 series cell Lithium batteries. The bq76925 allows a Host controller to easily monitor individual cell voltages, pack current and temperature. This information may be used by the Host to determine unsafe or faulty operating conditions such as over-voltage, under-voltage, over-temperature and over-current, as well as cell imbalance, state of charge and state of health conditions.

Cell input voltages are level shifted, multiplexed, scaled and output for measurement by a Host ADC. A low-drift calibrated reference voltage is provided on a dedicated pin to enable accurate measurements.

The voltage across an external sense resistor is amplified and output to a Host ADC for both charge and discharge current measurements. Two gain settings enable operation with a variety of sense resistor values over a wide range of pack currents.

To enable temperature measurements by the Host, the AFE provides a separate output pin for biasing an external thermistor network. This output can be switched on and off under Host control to minimize power consumption.

The bq76925 includes a comparator with a dynamically selectable threshold for monitoring current. The comparator result is driven through an open-drain output to alert the host when the threshold is exceeded. This feature can be used to wake up the Host on connection of the load, or to alert the Host to a potential fault condition.

The bq76925 integrates cell balancing FETs that are fully controlled by the Host. The balancing current is set by external resistors up to a maximum value of 50 mA. These same FETs may be utilized in conjunction with cell voltage measurements to detect an open wire on a cell sense-line.

The Host communicates with the AFE via an I^2C interface. A packet CRC may optionally be used to ensure robust operation. The device may be put into a low-current sleep mode via the I^2C interface and awakened by pulling up the ALERT pin.

These devices have limited built-in ESD protection. The leads should be shorted together or the device placed in conductive foam during storage or handling to prevent electrostatic damage to the MOS gates.

PIN DIAGRAMS

PW PACKAGE (TOP VIEW)

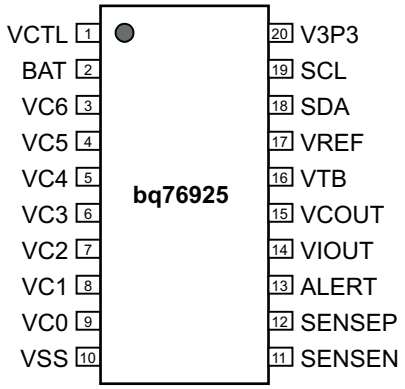

RGE PACKAGE (TOP VIEW)

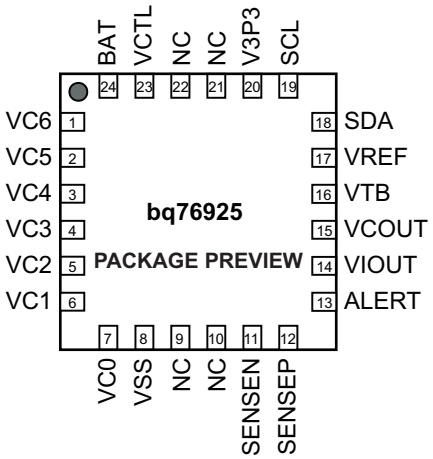

PIN FUNCTIONS

PIN NO.		NAME	TYPE	DESCRIPTION
TSSOP	QFN			
1	23	VCTL	Output	3.3 V Regulator control voltage (1)
2	24	BAT	Power	Supply voltage, tied to most positive cell
3	1	VC6	Input	Sense voltage for most positive cell
4	2	VC5	Input	Sense voltage for second most positive cell
5	3	VC4	Input	Sense voltage for third most positive cell
6	4	VC3	Input	Sense voltage for fourth most positive cell
7	5	VC2	Input	Sense voltage for fifth most positive cell
8	6	VC1	Input	Sense voltage for least positive cell
9	7	VC0	Input	Sense voltage for negative end of cell stack
10	8	VSS	Power	Ground
	9	NC	NA	No Connection (leave open)
	10	NC	NA	No Connection (leave open)
11	11	SENSEN	Input	Negative current sense
12	12	SENSEP	Input	Positive current sense
13	13	ALERT	Output	Overcurrent alert (open drain)
14	14	VIOUT	Output	Current measurement voltage
15	15	VCOUT	Output	Cell measurement voltage
16	16	VTB	Output	Bias voltage for thermistor network
17	17	VREF	Output	Reference voltage for ADC
18	18	SDA	Input / Output	I^2C Data (open drain)
19	19	SCL	Input	I^2C Clock (open drain)
20	20	V3P3	Output	3.3 V Regulator
	21	NC	NA	No Connection (leave open)
	22	NC	NA	No Connection (leave open)

(1) When a bypass FET is used to supply the regulated 3.3V load current, VCTL automatically adjusts to keep V3P3 = 3.3 V. If VCTL is tied to BAT, the load current is supplied through V3P3.

FUNCTIONAL BLOCK DIAGRAM

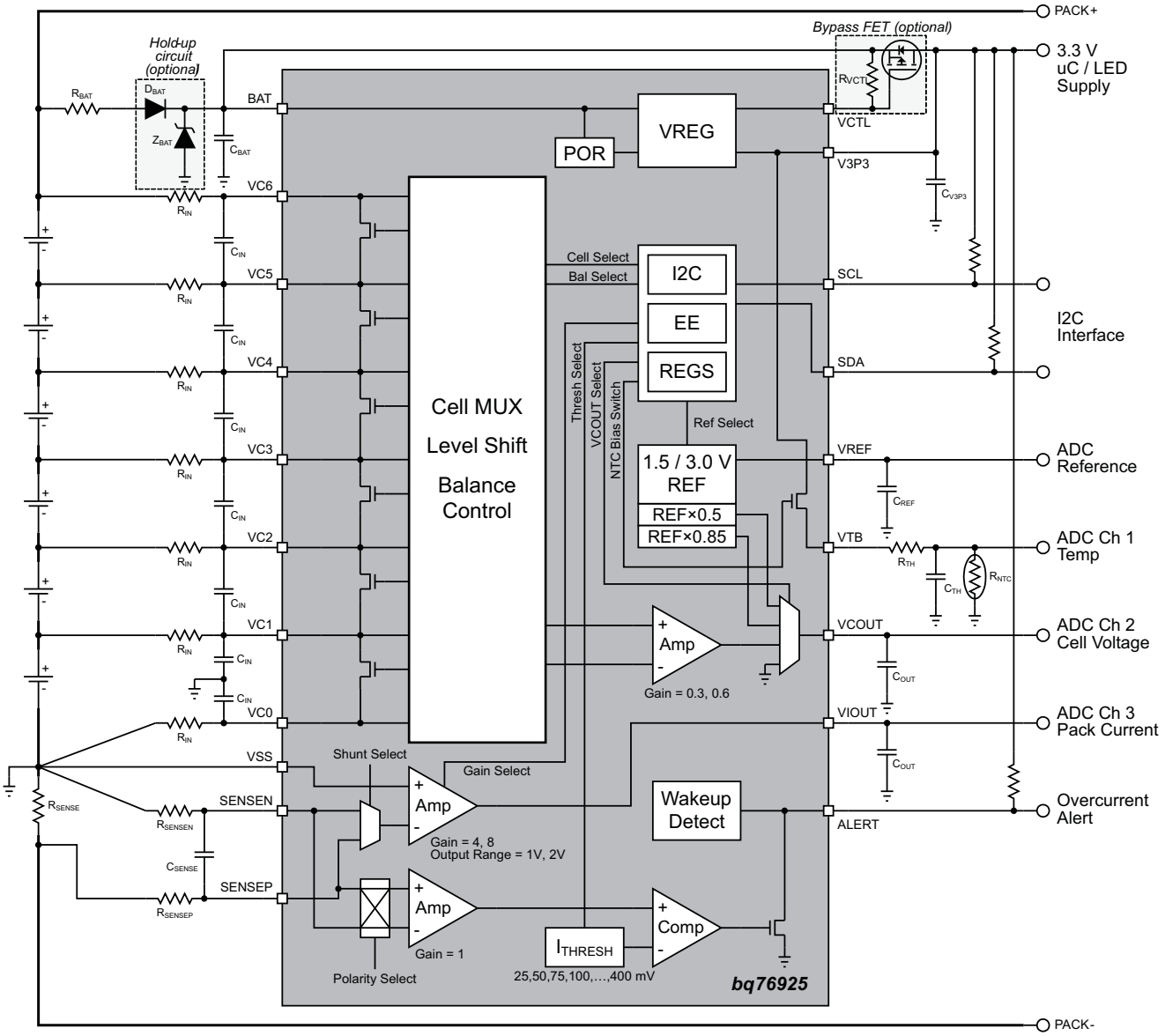

ORDERING INFORMATION(1)

T_A	PACKAGE	PART NUMBER(2)
–25°C to 85°C	20-Pin PW	bq76925PW
	24-Pin RGE	bq76925RGE(3)

(1) For the most current package and ordering information, see the Package Option Addendum at the end of this document, or see the TI web site at www.ti.com.
(2) The PW and RGE package options are also available taped and reeled. Add an R suffix to the device type (e.g., bq76925PWR for 2000 units per reel). See applications section of data sheet for layout information.
(3) Product Preview

ABSOLUTE MAXIMUM RATINGS(1)

over operating free-air temperature range (unless otherwise noted)

			RANGE(2)		
			MIN	MAX	UNITS
V_{BAT}	Supply voltage range	BAT	–0.3	36	V
V_I	Input voltage range	Cell input differential, VCn to VCn+1, n = 0 to 5	–0.3	9	V
		Cell input, VCn, n = 1 to 6	–0.3	(6 × n)	
		BAT to VC6 differential	–10	10	
		VC0 (3)	–3	3	
		SENSEP, SENSEN	–3	3	
		SCL, SDA	–0.3	6	
V_O	Output voltage range	VCOUT, VIOUT, VREF	–0.3	3.6	V
		VTB, V3P3	–0.3	7	
		ALERT	–0.3	30	
		VCTL	–0.3	36	
I_{CB}	Cell balancing current			70	mA
I_{IN}	Cell input current		–25	70	mA
T_{STG}	Storage temperature range		–65	150	°C

(1) Stresses beyond those listed under “absolute maximum ratings” may cause permanent damage to the device. These are stress ratings only. Functional operation of the device at these or any other conditions beyond those indicated under “Recommended Operating Conditions” is not implied. Exposure to absolute–maximum–rated conditions for extended periods may affect device reliability.
(2) All voltages are relative to VSS, except “Cell input differential”.
(3) Negative voltage swings on VC0 in the absolute maximum range can cause unwanted circuit behavior and should be avoided.

THERMAL INFORMATION

THERMAL METRIC(1)		bq76925		UNITS
		TSSOP (PW PACKAGE)	QFN (RGE PACKAGE) PRODUCT PREVIEW	
		(20) PINS	(24) PINS	
θ_{JA}	Junction-to-ambient thermal resistance	97.5		°C/W
θ_{JCtop}	Junction-to-case (top) thermal resistance	31.7		
θ_{JB}	Junction-to-board thermal resistance	48.4		
ψ_{JT}	Junction-to-top characterization parameter	1.5		
ψ_{JB}	Junction-to-board characterization parameter	47.9		
θ_{JCbot}	Junction-to-case (bottom) thermal resistance	n/a		

(1) For more information about traditional and new thermal metrics, see the *IC Package Thermal Metrics* application report, SPRA953.

RECOMMENDED OPERATING CONDITIONS[1]

				MIN	TYP	MAX	UNIT
	Supply voltage range	BAT		4.2		26.4	V
V_{IN}	Input voltage range	Cell input differential, VCn to VCn+1, n = 0 to 5		1.4		4.4	V
		Cell input, VCn, n = 1 to 6				4.4 × n	V
		BAT to VC6 differential		–8		8	V
		VC0, SENSEN			0		V
		SENSEP		–125		375	mV
		SCL, SDA		0		5.5	V
		V3P3	Backfeeding[2]			5.5	V
		ALERT	Wakeup function	0		26.4	V
V_{OUT}	Output voltage range	VCOUT, VIOUT		0		V3P3 + 0.2	V
		VREF	REFSEL = 0		1.5		V
			REFSEL = 1		3.0		V
		VTB				5.5	V
		V3P3	Regulating		3.3		V
		VCTL		0.8		26.4	V
		ALERT	Alert function	0		5.5	V
I_{CB}	Cell balancing current			0		50	mA
R_{BAT}	BAT filter resistance				100		Ω
C_{BAT}	BAT filter capacitance				10		µF
R_{IN}	External cell input resistance				[3]100		Ω
C_{IN}	External cell input capacitance			0.1	1	10	µF
R_{SENSEN} R_{SENSEP}	Current sense input filter resistance				1K		Ω
C_{SENSE}	Current sense input filter capacitance				0.1		µF
R_{VCTL}	VCTL pullup resistance	Without external bypass transistor			0		Ω
		With external bypass transistor			200K		
C_{V3P3}	V3P3 output capacitance	Without external bypass transistor			4.7		µF
		With external bypass transistor			1.0		
C_{REF}	VREF output capacitance			1.0			µF
C_{OUT}	ADC channel output capacitance	VCOUT		0.1			µF
		VIOUT		470		2000	pF
T_{OPR}	Operating free-air temperature			–25		85	°C
T_{FUNC}	Functional free-air temperature			–40		100	°C

(1) All voltages are relative to VSS, except “Cell input differential”.
(2) Internal 3.3 V regulator may be overridden (i.e. backfed) by applying an external voltage larger than the regulator voltage.
(3) $R_{IN,MIN} = 0.5 \times (VCn_{MAX} / 50\ mA)$ if cell balancing used so that maximum recommended cell balancing current is not exceeded

ELECTRICAL CHARACTERISTICS

BAT = 4.2 to 26.4V, VCn = 1.4 to 4.4, T_A = –25°C to 85°C
Typical values stated where T_A = 25°C and BAT= 21.6V (unless otherwise noted)

Supply Current

PARAMETER		TEST CONDITION		MIN	TYP	MAX	UNIT
I_{DD1}	Normal mode supply current	All device functions enabled All pins unloaded SDA and SCL high			40	48	µA
I_{DD2}	Standby mode 1 supply current	V3P3 and overcurrent monitor enabled All pins unloaded All other device functions disabled SDA and SCL high			14	17	µA
I_{DD3}	Standby mode 2 supply current	V3P3 enabled All pins unloaded All device functions disabled SDA and SCL high			12	14	V
I_{DD4}	Sleep mode supply current	V3P3 disabled All pins unloaded All device functions disabled SDA and SCL low			1.0	1.5	µA
I_{VCn}	Input current for selected cell	All cell voltages equal Cell balancing disabled Open cell detection disabled during cell voltage monitoring	n = 6		2.4	2.7	µA
			n = 1 – 5			< 0.5	
ΔI_{VCn}	Cell to cell input current difference	All cell voltages equal Cell balancing disabled Open cell detection disabled				< 0.2	µA

Internal Power Control (Startup and Shutdown)

PARAMETER		TEST CONDITION		MIN	TYP	MAX	UNIT
V_{POR}	Power on reset voltage	Measured at BAT pin	Initial BAT < 1.4 VBAT rising(1)	4.3	4.5	4.7	V
			Initial BAT > 1.4 VBAT rising(1)	6.5	7.0	7.5	V
V_{SHUT}	Shutdown voltage(2)	Measured at BAT pin, BAT falling				3.6	V
t_{POR}	Time delay after POR before I2C comms allowed	CV3P3 = 4.7 µF				1	ms
V_{WAKE}	Wakeup voltage	Measured at ALERT pin		0.8		2	V
t_{WAKE_PLS}	Wakeup signal pulse width			1		5	µs
t_{WAKE_DLY}	Time delay after wakeup before I2C comms allowed	CV3P3 = 4.7 µF				1	ms

(1) Initial power up will start with BAT < 1.4 V, however if BAT falls below V_{SHUT} after rising above V_{POR}, the power on threshold depends on the minimum level reached by BAT after falling below V_{SHUT}
(2) Following POR, the device will operate down to this voltage.

3.3 V Voltage Regulator

PARAMETER		TEST CONDITION	MIN	TYP	MAX	UNIT
3.3 V VOLTAGE REGULATOR						
V_{CTL}	Regulator control voltage (1)(2)	Measured at VCTL, V3P3 regulating	3.3		26.4	V
V_{V3P3}	Regulator output	Measured at V3P3, I_{REG} = 0 to 4 mA, BAT = 4.2 to 26.4 V	3.2	3.3	3.4	V
I_{REG}	V3P3 output current				4.0	mA
I_{SC}	V3P3 short circuit current limit	V3P3 = 0.0 V	10.0		17.0	mA
V_{TB}	Thermistor bias voltage	Measured at VTB, I_{TB} = 0		V_{V3P3}		V
I_{TB}	Thermistor bias current				1.0	mA
R_{TB}	Thermistor bias internal resistance	$R_{DS,ON}$ for internal FET switch, I_{TB} = 1.0 mA		90	130	Ω

(1) When a bypass FET is used to supply the regulated 3.3V load current, VCTL automatically adjusts to keep V3P3 = 3.3 V. Note that $V_{CTL,MIN}$ and the FET V_{GS} will determine the minimum BAT voltage at which the bypass FET will operate.
(2) If VCTL is tied to BAT, the load current is supplied through V3P3.

Voltage Reference

PARAMETER		TEST CONDITION		MIN	TYP	MAX	UNIT
VOLTAGE REFERENCE							
V_{REF}	Voltage reference output	Before gain correction, T_A = 25°C	REF_SEL = 0	1.44		1.56	V
			REF_SEL = 1	2.88		3.12	
		After gain correction, (1)T_A = 25°C	REF_SEL = 0	–0.1%	1.5	+0.1%	
			REF_SEL = 1	–0.1%	3.0	+0.1%	
V_{REF_CAL}	Reference calibration voltage	Measured at VCOUT	VCOUT_SEL = 2	–0.9%	0.5 × V_{REF}	+0.9%	V
			VCOUT_SEL = 3	–0.5%	0.85 × V_{REF}	+0.5%	
			(0.85 × V_{REF}) – (0.5 × V_{REF})	–0.3%	0.35 × V_{REF}	+0.3%	V
ΔV_{REF}	Voltage reference tolerance	T_A = 0 – 50°C		–40		40	ppm/°C
I_{REF}	VREF output current					10	µA

(1) Gain correction factor determined at final test and stored in non-volatile storage. Gain correction is applied by Host controller.

Cell Voltage Amplifier

PARAMETER		TEST CONDITION		MIN	TYP	MAX	UNIT
G_{VCOUT}	Cell voltage amplifier gain	Measured from VCn to VCOUT	REF_SEL = 0	–1.6%	0.3	1.5%	
			REF_SEL = 1	–1.6%	0.6	1.5%	
O_{VCOUT}	Cell voltage amplifier offset	Measured from VCn to VCOUT		–16		15	mV
V_{COUT}	Cell voltage amp output range (1)	Measured at VCOUT, VCn = 5.0V	REF_SEL = 0	1.47	1.5	1.53	V
			REF_SEL = 1	2.94	3.0	3.06	V
		Measured at VCOUT, VCn = 0.0V			0.0		V
ΔV_{COUT}	Cell voltage amplifier accuracy	VCn = 1.4 V to 4.4 V, After correction, (2) Measured at VCOUT (3) REF_SEL = 1 (4)	T_A = 25°C	–3		3	mV
			T_A = 0°C to 50°C	–5		5	
			T_A = –25°C to 85°C	–8		8	
I_{VCOUT}	VCOUT output current(5)					10	µA
t_{VCOUT}	Delay from VCn select to VCOUT	Output step of 200 mV. C_{OUT} = 0.1 µF				100	µs

(1) For VCn values greater than 5.0 V, VCOUT clamps at approximately V3P3.
(2) Correction factor determined at final test and stored in non-volatile storage. Correction is applied by Host controller.
(3) Output referred. Input referred accuracy is calculated as ΔV_{COUT} / G_{VCOUT} (e.g. 3 / 0.6 = 5).
(4) Correction factors are calibrated for gain of 0.6. Tolerance at gain of 0.3 is approximately doubled. Contact TI for information on devices calibrated to a gain of 0.3.
(5) Max DC load for specified accuracy.

Current Sense Amplifier

PARAMETER		TEST CONDITION		MIN	TYP	MAX	UNIT
G_{VIOUT}	Current sense amplifier gain	Measured from SENSEN, SENSEP to VIOUT	I_GAIN = 0		4		
			I_GAIN = 1		8		
V_{IIN}	Current sense amp input range	Measured from SENSEN, SENSEP to VSS		–125		375	mV
V_{IOUT}	Current sense amp output range	Measured at VIOUT	REF_SEL = 0	0.25		1.25	V
			REF_SEL = 1	0.5		2.5	V
	Zero current output	Measured at VIOUT SENSEP = SENSEN	REF_SEL = 0		1.0		V
			REF_SEL = 1		2.0		V
ΔV_{IOUT}	Current amplifier accuracy			–1%		1%	
IV_{IOUT}	VIOUT output current (1)					10	µA

(1) Max DC load for specified accuracy

Over Current Comparator

PARAMETER		TEST CONDITION	MIN	TYP	MAX	UNIT
V_{BAT_COMP}	Minimum VBAT for comparator operation(1)				5	V
G_{VCOMP}	Comparator amplifier gain	Measured from SENSEP to comparator input		1		
V_{ITRIP}	Current comparator trip threshold(2)		25		400	mV
ΔV_{ITRIP}	Current comparator accuracy	V_{ITRIP} = 25 mV	–6		6	mV
		V_{ITRIP} > 25 mV	–10%		10%	V
V_{OL_ALERT}	ALERT Output Low Logic	I_{ALERT} = 1 mA			0.4	V
V_{OH_ALERT}	ALERT Output High Logic (3)		NA	NA	NA	
I_{ALERT}	ALERT Pulldown current	ALERT = 0.4 V, Output driving low	1			mA
I_{ALERT_LKG}	ALERT Leakage current	ALERT = 5.0 V, Output high-Z			< 1	µA
t_{OC}	Comparator response time				100	µs

(1) The Over Current Comparator is not guaranteed to work when VBAT is below this voltage.
(2) Trip threshold selectable from 25, 50, 75, 100, 125, 150, 175, 200, 225, 250, 275, 300, 325, 350, 375 or 400 mV
(3) This parameter NA because output is open drain.

Internal Temperature Measurement

PARAMETER		TEST CONDITION	MIN	TYP	MAX	UNIT
V_{TEMP_INT}	Internal temperature voltage	Measured at VCOUT, T_{INT} = 25°C	1.15	1.2	1.25	V
ΔV_{TEMP_INT}	Internal temperature voltage sensitivity			–4.4		mV / °C

Cell Balancing and Open Cell Detection

PARAMETER		TEST CONDITION	MIN	TYP	MAX	UNIT
R_{BAL}	Cell balancing internal resistance(1)	$R_{DS,ON}$ for VC1 internal FET switch, VCn = 3.6 V	1	3	5	Ω
		$R_{DS,ON}$ for internal VC2 to VC6 FET switch, VCn = 3.6 V	3	5.5	8	

(1) Balancing current is not internally limited. The cell balancing operation is completely controlled by the Host processor, no automatic function or time-out is included in the part. Care must be used to ensure that balancing current through the part is below the maximum power dissipation limit. The Host algorithm is responsible for limiting thermal dissipation to package ratings.

I²C Compatible Interface

DC PARAMETERS			MIN	TYP	MAX	UNIT
V_{IL}	Input Low Logic Threshold				0.6	V
V_{IH}	Input High Logic Threshold		2.8			V
V_{OL}	Output Low Logic Drive	I_{OL} = 1 mA			0.20	V
		I_{OL} = 2.5 mA			0.40	
V_{OH}	Output High Logic Drive (Not applicable due to open-drain outputs)			N/A	V	
I_{LKG}	I²C Pin Leakage	Pin = 5.0 V, Output in high-Z			< 1	µA
AC PARAMETERS						
t_r	SCL, SDA Rise Time				1000	ns
t_f	SCL, SDA Fall Time				300	ns
$t_{w(H)}$	SCL Pulse Width High		4.0			µs
$t_{w(L)}$	SCL Pulse Width Low		4.7			µs
$t_{su(STA)}$	Setup time for START condition		4.7			µs
$t_{h(STA)}$	START condition hold time after which first clock pulse is generated		4.0			µs
$t_{su(DAT)}$	Data setup time		250			ns
$t_{h(DAT)}$	Data hold time		0(1)			µs
$t_{su(STOP)}$	Setup time for STOP condition		4.0			µs
$t_{su(BUF)}$	Time the bus must be free before new transmission can start		4.7			µs
t_V	Clock Low to Data Out Valid				900	ns
$t_{h(CH)}$	Data Out Hold Time After Clock Low		0			ns
f_{SCL}	Clock Frequency		0		100	kHz
t_{WAKE}	I2C ready after transition to Wake Mode				2.5	ms

(1) Devices must provide internal hold time of at least 300 ns for the SDA signal to bridge the undefined region of the falling edge of SCL.

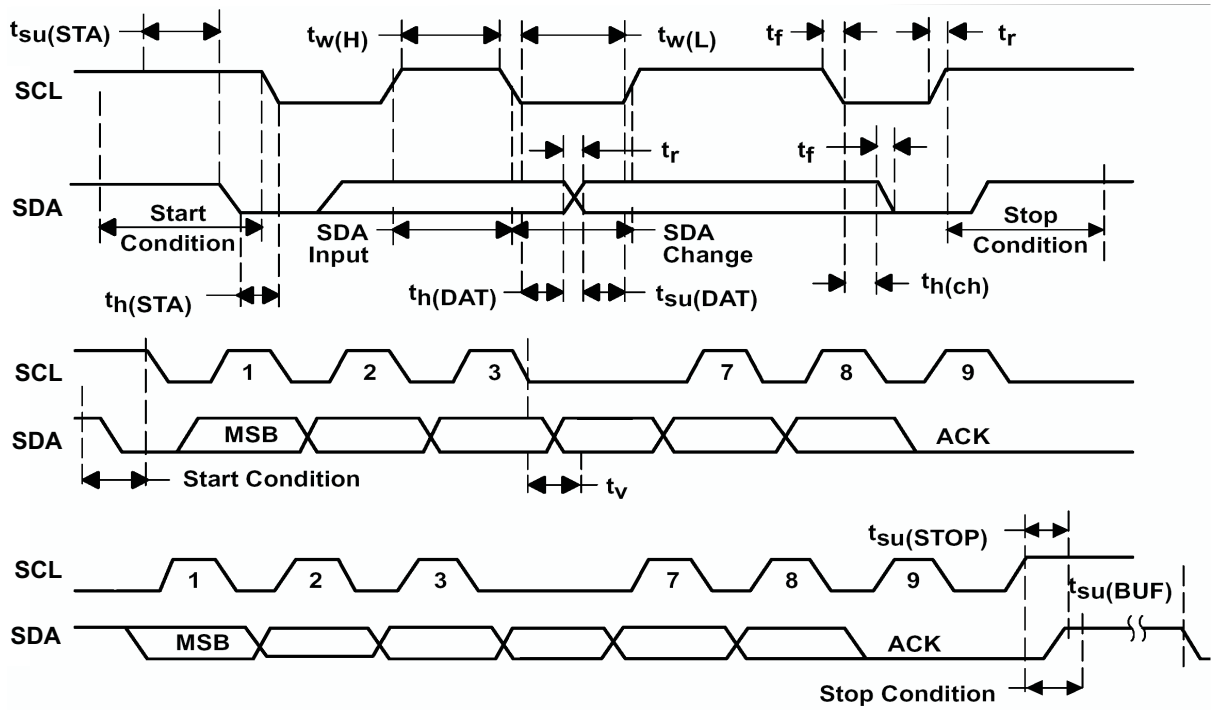

Figure 1. I²C Timing

OPERATIONAL OVERVIEW

INTRODUCTION

The bq76925 Host controlled analog front end (AFE) is part of a complete pack monitoring, balancing and protection system for 3 to 6 series cell Lithium batteries. The bq76925 allows a Host controller to easily monitor individual cell voltages, pack current and temperature. This information can be used by the Host to detect and act on a fault condition caused when one or more of these parameters exceed the limits of the application. In addition, this information may be used by the Host to determine end-of-charge, end-of-discharge and other gas-gauging and state of health conditions.

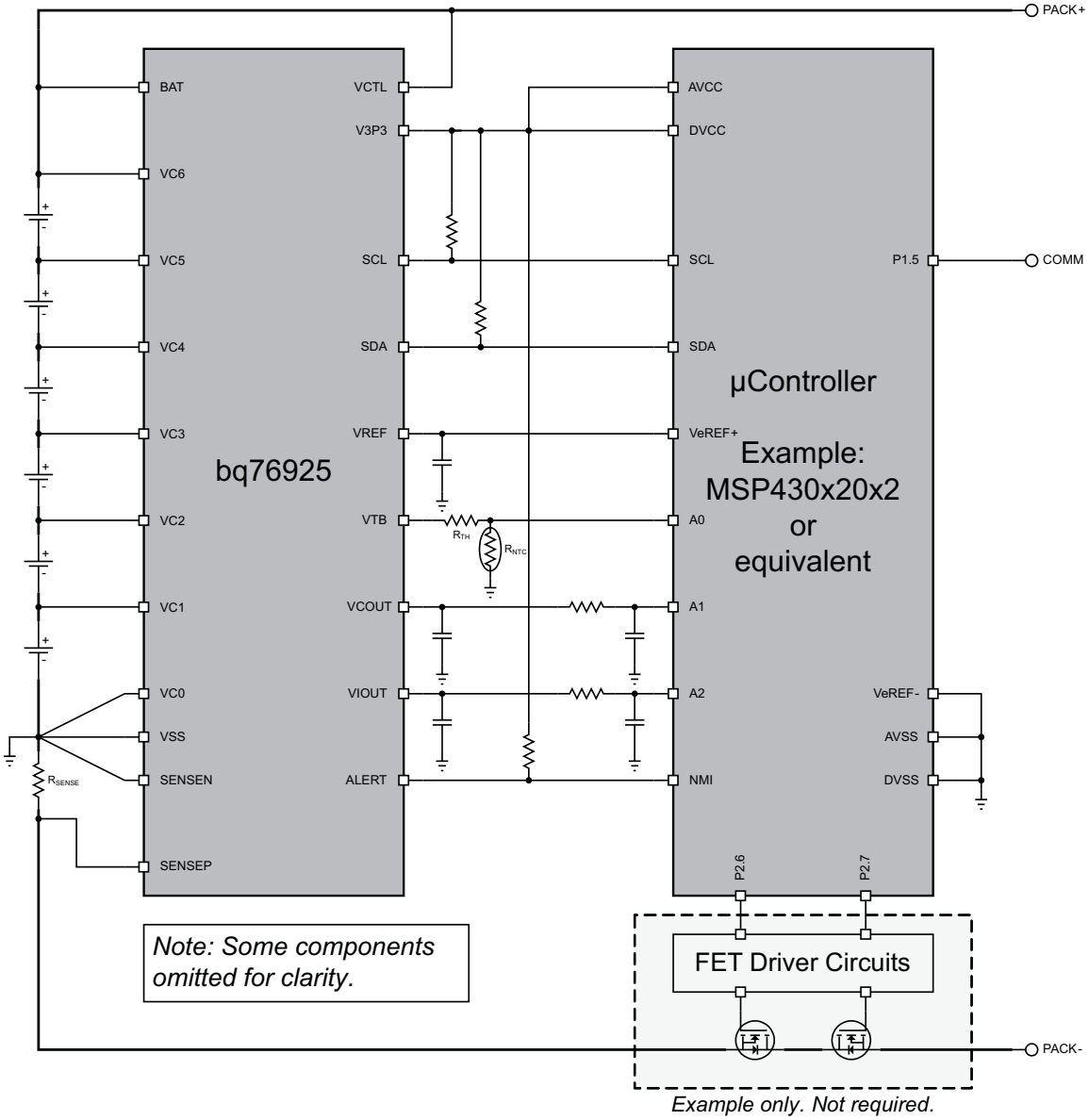

Figure 2. Example of bq76925 With Host Controller

POWER MODES

Power On Reset (POR)

When initially powering up the bq76925, the voltage on the BAT pin must exceed V_{POR} (4.7 V max) before the device will turn on. Following this, the device will remain operational as long as the voltage on BAT remains above V_{SHUT} (3.6 V max). If the BAT voltage falls below V_{SHUT} the device will shut down. Recovery from shutdown occurs when BAT rises back above the V_{POR} threshold and is equivalent to a POR. The V_{POR} threshold following a shutdown depends on the minimum level reached by BAT after crossing below V_{SHUT}. If BAT does not fall below ~1.4 V, a higher V_{POR} (7.5 V max) applies. This is illustrated in Figure 3.

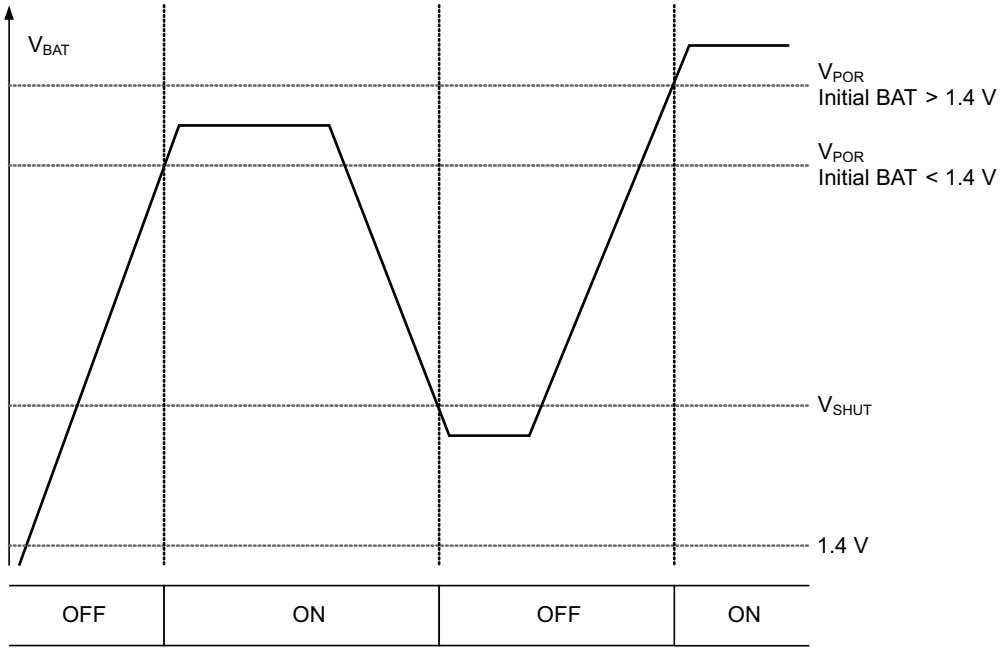

Figure 3. Power On State vs V_{BAT}

Following a power on reset, all volatile registers assume their default state. Therefore, care must be taken that transients on the BAT pin during normal operation do not fall below V_{SHUT}. To avoid this condition in systems subject to extreme transients or brown-outs, a hold-up circuit such as the one shown in the functional diagram is recommended. When a hold-up circuit is used, care must be taken to observe the BAT to VC6 maximum ratings.

Standby

Individual device functions such as cell translator, current amplifier, reference and current comparator can be enabled and disabled under Host control by writing to the POWER_CTL register. This feature can be used to save power by disabling functions that are unused. In the minimum power standby mode, all device functions can be turned off leaving only the 3.3 V regulator active.

Sleep

In addition to standby, a sleep mode is provided by which the Host can order the bq76925 to shutdown all internal circuitry including the LDO regulator. In this mode the device will consume a minimal amount of current (< 1.5 µA) due only to leakage and powering of the wake-up detection circuitry.

Sleep mode is entered by writing a ‘1’ to the SLEEP bit in the POWER_CTL register. In sleep mode, all functions including the LDO are disabled. Wake-up is achieved by pulling up the ALERT pin; however the wake-up circuitry is not armed until the voltage at V3P3 drops to ~0 V. To facilitate the discharge of V3P3, an internal 3 kΩ pull-down is connected from V3P3 to VSS during the time that sleep mode is active. Once V3P3 is discharged, the bq76925 may be awakened by pulling the ALERT pin above V_{WAKE} (2 V max).

The SLEEP_DIS bit in the POWER_CTL register acts as an override to the sleep function. When SLEEP_DIS is set to '1', writing the SLEEP bit has no effect (i.e. sleep mode cannot be entered). If SLEEP_DIS is set after sleep mode has been entered, the device will immediately exit sleep mode. This scenario can arise if SLEEP_DIS is set after SLEEP is set, but before V3P3 has discharged below a valid operating voltage. This scenario can also occur if the V3P3 pin is held up by external circuitry and not allowed to fully discharge.

If the over-current alert function is not used, the ALERT pin can function as a dedicated wake-up pin. Otherwise, the ALERT pin will normally be pulled up to the LDO voltage, so care must be taken in the system design so that the wake-up signal does not interfere with proper operation of the regulator.

Internal LDO Voltage Regulator

The bq76925 provides a regulated 3.3 V supply voltage on the V3P3 pin for operating the device's internal logic and interface circuitry. This regulator may also be used to directly power an external microcontroller or other external circuitry up to a limit of 4 mA load current. In this configuration, the VCTL pin is tied directly to the BAT pin. For applications requiring more than 4 mA, an external bypass transistor may be used to supply the load current. In this configuration the VCTL pin is tied to the gate of the bypass FET. These two configurations are show in Figure 4.

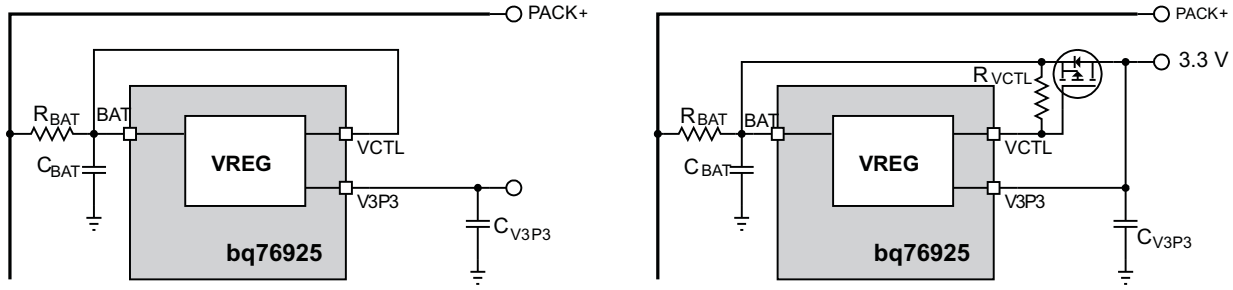

a) Regulator load supplied through bq76925

b) Regulator load supplied through external pass device

Figure 4. LDO Regulator Configurations

For the configuration of Figure 4B), a high gain bypass device should be used to ensure stability. A bipolar PNP or p-channel FET bypass device may be used. Contact TI for recommendations.

The LDO regulator may be overridden (i.e., back-fed) by an external supply voltage greater than the regulated voltage on V3P3. In this configuration the bq76925 internal logic and interface circuitry will operate from the external supply and the internal 3.3 V regulator will supply no load current.

ADC Interface

The bq76925 is designed to interface to a multi-channel analog-to-digital converter (ADC) located in an external Host controller, such as an MSP430 Microcontroller or equivalent. Three outputs provide voltage, current and temperature information for measurement by the Host. In addition, the bq76925 includes a low-drift calibrated 1.5 / 3 V reference that is output on a dedicated pin for use as the reference input to the ADC.

The gain and offset characteristics of the bq76925 are measured during factory test and stored in non-volatile memory as correction factors. The Host reads these correction factors and applies them to the ADC conversion results in order to achieve high measurement accuracy. In addition, the precise voltage reference of the bq76925 can be used to calibrate out the gain and offset of the Host ADC.

Reference Voltage

The bq76925 outputs a stable reference voltage for use by the Host ADC. A nominal voltage of 1.5 V or 3 V is selected via the REF_SEL bit in the CONFIG_2 register. The reference voltage is very stable across temperature, but the initial voltage may vary by ±4%. The variation from nominal is manifested as a gain error in the ADC conversion result. To correct for this error, offset and gain correction factors are determined at final test and stored in the non-volatile registers VREF_CAL and VREF_CAL_EXT. The Host reads the correction factors and applies them to the nominal reference voltage to arrive at the actual reference voltage as described under Cell Voltage Monitoring. After gain correction, the tolerance of the reference will be within ±0.1%.

Host ADC Calibration

All analog to digital converters have inherent gain and offset errors which adversely affect measurement accuracy. Some microcontrollers may be characterized by the manufacturer and shipped with ADC gain and offset information stored on-chip. It is also possible for such characterization to be done by the end-user on loose devices prior to PCB assembly, or as a part of the assembled PCB test.

For applications where such ADC characterization is not provided or is not practical, the bq76925 provides a means for in-situ calibration of the Host ADC. Through setting of the VCOUT_SEL bits in the CELL_CTL register two scaled versions of the reference voltage, 0.5 × V_{REF} and 0.85 × V_{REF}, can be selected for output on the VCOUT pin for measurement by the Host ADC. Measuring both scaled voltages enables the Host to do a two-point calibration of the ADC and compensate for the ADC offset and gain in all subsequent ADC measurement results as shown in Figure 5.

Note that the calibration accuracy will be limited by the tolerance of the scaled reference voltage output so that use of this method may not be effective. For these cases, it is recommended to use a higher accuracy source for the two-point calibration shown in Figure 5.

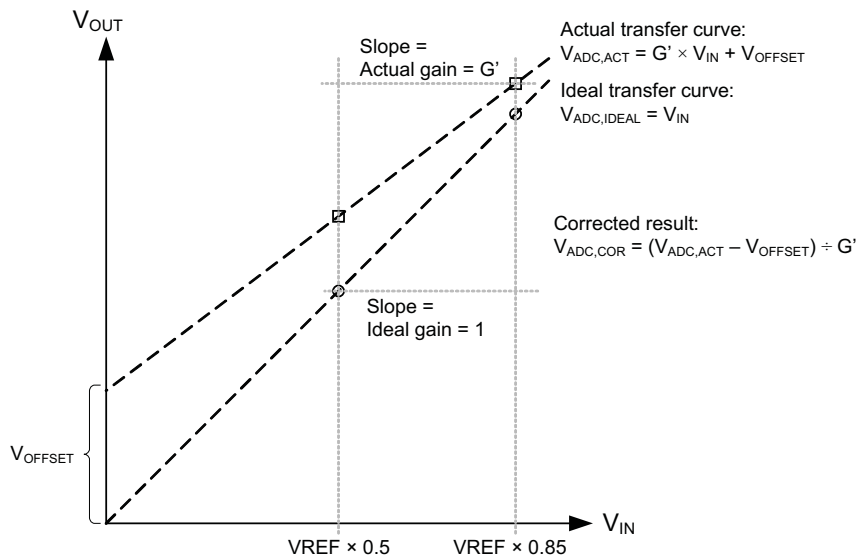

Figure 5. Host ADC Calibration Using V_{REF}

Cell Voltage Monitoring

The cell voltage monitoring circuits include an input level-shifter, multiplexer (MUX) and scaling amplifier. The Host selects one VCn cell input for measurement by setting the VCOUT_SEL and CELL_SEL bits in the CELL_CTL register. The scaling factor is set by the REF_SEL bit in the CONFIG_2 register. The selected cell input is level shifted to VSS reference, scaled by a nominal gain G_{VCOUT} = 0.3 (REF_SEL = 0) or 0.6 (REF_SEL = 1) and output on the VCOUT pin for measurement by the Host ADC.

Similar to the reference voltage, gain and offset correction factors are determined at final test for each individual cell input and stored in non-volatile registers VCn_CAL (n = 1-6) and VC_CAL_EXT_m (m = 1-2). These factors are read by the Host and applied to the ADC voltage measurement results in order to obtain the specified accuracy.

The cell voltage offset and gain correction factors are stored as 5-bit signed integers in 2's complement format. The most significant bits (VCn_OC_4, VCn_GC_4) are stored separately and must be concatenated with the least significant bits (VCn_OFFSET_CORR, VCn_GAIN_CORR).

The reference voltage offset and gain correction factors are stored respectively as a 6-bit and 5-bit signed integer in 2's complement format. As with the cell voltage correction factors, the most significant bits (VREF_OC_5, VREF_OC_4, VREF_GC_4) are stored separately and must be concatenated with the least significant bits (VREF_OFFSET_CORR, VREF_GAIN_CORR).

The actual cell voltage (VCn) is calculated from the measured voltage (VCOUT) as shown in the following equations:

$$VCOUT = \frac{\text{ADC Count}}{\text{Full Scale Count}} \times VREF_{NOMINAL}$$

$$VCn = \frac{VCOUT \times GC_{VREF} + OC_{VCOUT}}{G_{VCOUT}} \times (1 + GC_{VCOUT}) \quad (1)$$

$$GC_{VCOUT} = \left[(VCn\_GC\_4 << 4) + VCn\_GAIN\_CORR\right] \times 0.001,$$

$$OC_{VCOUT} = \left[(VCn\_OC\_4 << 4) + VCn\_OFFSET\_CORR\right] \times 0.001,$$

$$GC_{VREF} = (1 + \left[(VREF\_GC\_4 << 4) + VREF\_GAIN\_CORR\right] \times 0.001) + \frac{\left[(VREF\_OC\_5 << 5) + (VREF\_OC\_4 << 4) + VREF\_OFFSET\_CORR\right] \times 0.001}{VREF_{NOMINAL}} \quad (2)$$

Cell Amplifier Headroom Under Extreme Cell Imbalance

For cell voltages across (VC1 – VC0) that are less than ~2.64 V, extreme cell voltage imbalances between (VC1 – VC0) and (VC2 – VC1) can lead to a loss of gain in the (VC2 – VC1) amplifier. The cell imbalance at which the loss of gain occurs is determined by the following equation:

$$(VC2 - VC1) \times 0.6 > (VC1 - VSS) \quad (3)$$

Assuming VC0 = VSS, it can be seen that when (VC1 – VC0) > 2.64 volts, the voltage across (VC2 – VC1) can range up to the limit of 4.4 V without any loss of gain. At the minimum value of (VC1 – VC0) = 1.4 V, an imbalance of more than 900 mV is tolerated before any loss of gain in the (VC2 – VC1) amplifier. For higher values of (VC1 – VC0), increasingly large imbalances are tolerated. For example, when (VC1 – VC0) = 2.0 V, an imbalance up to 1.33 V (i.e. (VC2 – VC1) = 3.33 V) results in no degradation of amplifier performance.

Normally, cell imbalances greater than 900 mV will signal a faulty condition of the battery pack and its use should be discontinued. *The loss of gain on the second cell input does not affect the ability of the system to detect this condition. The gain fall-off is gradual so that the measured imbalance will never be less than the critical imbalance set by Equation 3.*

Therefore if the measured (VC2 – VC1) is greater than (VC1 – VSS) / 0.6, a severe imbalance is detected and the pack should enter a fault state which prevents further use. In this severe cell imbalance condition comparisons of the measured (VC2 – VC1) to any over-voltage limits will be optimistic due to the reduced gain in the amplifier, further emphasizing the need to enter a fault state.

Cell Amplifier Headroom Under BAT Voltage Drop

Voltage differences between BAT and the top cell potential come from two sources as shown in Figure 6: V3P3 regulator current that flows through the R_{BAT} filter resistor, and the voltage drop in the series diode D_{BAT} of the hold-up circuit. These effects cause BAT to be less than the top cell voltage measured by the cell amplifier.

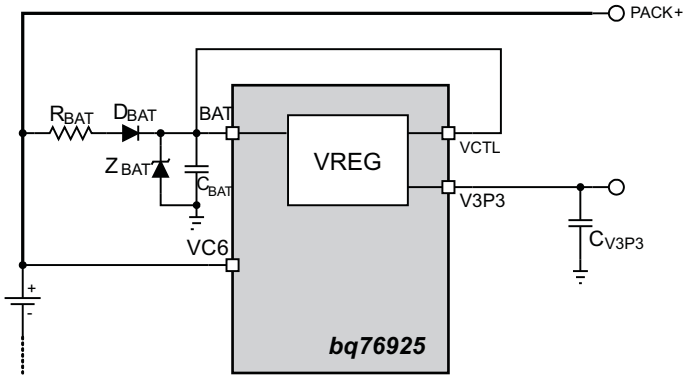

Figure 6. Sources of Voltage Drop Affecting the BAT Pin

The top cell amplifier (VC6 – VC5) is designed to measure an input voltage down to 1.4 V with a difference between the BAT and VC6 pin up to 1.2 V (i.e. BAT can be 1.2 V lower than VC6). However, in applications with fewer than 6 cells, the upper cell inputs are typically shorted to the top cell input. For example, in a 5-cell application VC6 and VC5 would be shorted together and the (VC5 – VC4) amplifier would measure the top cell voltage. The case is similar for 4- and 3-cell applications.

For these cases when using the (VC5 – VC4), (VC4 –VC3) or (VC3 – VC2) amplifier to measure the top cell, the difference between BAT and the top cell amplifier must be less than 240 mV in order to measure cell voltages down to 1.4 V. Note that at higher cell input voltages the top amplifier tolerates a greater difference. For example, in a 5-cell configuration (VC6 and VC5 tied together) the (VC5 – VC4) amplifier is able to measure down to a 1.7 V input with a 600 mV difference between VC5 and BAT.

Accordingly, in systems with fewer than 6 cells it is important in system design to minimize R_{BAT} and to use a Schottky type diode for D_{BAT} with a low forward voltage. If it is not possible to reduce the drop at BAT to an acceptable level, then for 4 and 5 cell configurations the (VC6 – VC5) amplifier may be used as the top cell amplifier as show in Table 1, which allows up to a 1.2 V difference between BAT and top cell.

Table 1. Alternate Connections for 4 and 5 Cells

Configuration	Cell 5	Cell 4	Cell 3	Cell 2	Cell 1	Unused Cell Inputs
5-cell	VC6 – VC5	VC4 – VC3	VC3 – VC2	VC2 – VC1	VC1 – VC0	Short VC5 to VC4
4-cell		VC6 – VC5	VC3 – VC2	VC2 – VC1	VC1 – VC0	Short VC5 to VC4 to VC3

Current Monitoring

Current is measured by converting current to voltage via a sense resistor connected between SENSEN and SENSEP. A positive voltage at SENSEP with respect to SENSEN indicates a discharge current is flowing, and a negative voltage indicates a charge current. The small voltage developed across the sense resistor is amplified by gain G_{VIOUT} and output on the VIOUT pin for conversion by the Host ADC. The voltage on VIOUT is always positive and for zero current is set to 3/4 of the output range. The current sense amplifier is inverting; discharge current causes VIOUT to decrease and charge current causes VIOUT to increase. Therefore, the measurement range for discharge currents is 3 times the measurement range for charge currents.

The current sense amplifier is preceded by a multiplexer that allows measurement of either the SENSEN or SENSEP input with respect to VSS. The Host selects the pin for measurement by writing the I_AMP_CAL bit in the CONFIG_1 register. The Host then calculates the voltage across the sense resistor by subtracting the measured voltage at SENSEN from the measured voltage at SENSEP. If the SENSEN and VSS connections are such that charge and discharge currents do not flow through the connection between them, i.e. there is no voltage drop between SENSEN and VSS due to the current being measured, then the measurement of the SENSEN voltage can be regarded as a calibration step and stored by the Host for use as a pseudo-constant in the V_{SENSE} calculation. The SENSEN voltage measurement would then only need updating when changing environmental conditions warrant.

The Host sets G_{VIOUT} by writing the I_GAIN bit in the CONFIG_1 register. The available gains of 4 and 8 enable operation with a variety of sense resistor values over a broad range of pack currents. The gain may be changed at any time allowing for dynamic range and resolution adjustment. The input and output ranges of the amplifier are determined by the value of the REF_SEL bit in the CONFIG_2 register. These values are shown in Table 2. Because the current amplifier is inverting, the Min column under Output Range corresponds to the Max column under Input Range. Likewise, the Max column under Output Range corresponds to the Min column under Input Range.

The actual current is calculated from the measured voltage (VIOUT) as follows. Note that V_{SENSE} is positive when discharge current is flowing. In keeping with battery pack conventions, the sign of I_{SENSE} is inverted so that discharge current is negative.

$$V_{SENSE} = \frac{-(VIOUT(SENSEP) - VIOUT(SENSEN))}{G_{VIOUT}}$$

$$I_{SENSE} = -\frac{V_{SENSE}}{R_{SENSE}} \quad (4)$$

Table 2. Current Amplifier Configurations

REF_SEL	I_GAIN	Gain	VIOUT (V) at I_{SENSE} = 0 (typical)	Input Range(1) (mV)		Output Range (V)(2)		I_{SENSE} Range (A) at R_{SENSE} = 1 mΩ	I_{SENSE} Resolution (mA)w/10-bit ADC(3)
				Min	Max	Min	Max		
0	0	4	1.0	–62.5	187.5	0.25	1.25	–62.5 – 187.5	366
0	1	8	1.0	–14	91	0.27	1.11	–14 – 91	183
1	0	4	2.0	–125	375	0.5	2.5	–125 – 375	732
1	1	8	2.0	–62.5	187.5	0.5	2.5	–62.5 – 187.5	366

(1) SENSEN or SENSEP measured with respect to VSS.
(2) Output range assumes typical value of VIOUT at I_{SENSE} = 0. For non-typical values, the output range will shift accordingly.
(3) Assumes 1 mΩ R_{SENSE} and ADC reference voltage of 1.5 V and 3.0 V when REF_SEL = 0 and 1, respectively.

Over Current Monitoring

The bq76925 also includes a comparator for monitoring the current sense resistor and alerting the Host when the voltage across the sense resistor exceeds a selected threshold. The available thresholds range from 25 mV to 400 mV and are set by writing the I_THRESH bits in the CONFIG_1 register. Positive (discharge) or negative (charge) current may be monitored by setting the I_COMP_POL bit in the CONFIG_1 register. By the choice of sense resistor and threshold a variety of trip points are possible to support a wide range of applications.

The comparator result is driven through the open-drain ALERT output to signal the host when the threshold is exceeded. This feature can be used to wake up the Host on connection of a load, or to alert the Host to a potential fault condition. The ALERT pin state is also available by reading the ALERT bit in the STATUS register.

Temperature Monitoring

To enable temperature measurements by the Host, the bq76925 provides the LDO regulator voltage on a separate output pin (VTB) for biasing an external thermistor network. In order to minimize power consumption, the Host may switch the VTB output on and off by writing to the VTB_EN bit in the POWER_CTL register. Note that if the LDO is back-fed by an external source, the VTB bias will be switched to the external source.

In a typical application, the thermistor network will consist of a resistor in series with an NTC thermistor, forming a resistor divider where the output is proportional to temperature. This output may be measured by the Host ADC to determine temperature.

Internal Temperature Monitoring

The internal temperature (T_{INT}) of the bq76925 can be measured by setting VCOUT_SEL = ‘01’ and CELL_SEL = ‘110’ in the CELL_CTL register. In this configuration, a voltage proportional to temperature (V_{TEMP_INT}) is output on the VCOUT pin. This voltage is related to the internal temperature as follows:

$$V_{TEMP\_INT}(mV) = V_{TEMP\_INT}(T_{INT} = 25°C) - T_{INT}(°C) \times \Delta V_{TEMP\_INT}$$

Cell Balancing and Open Cell Detection

The bq76925 integrates cell balancing FETs that are individually controlled by the Host. The balancing method is resistive bleed balancing, where the balancing current is set by the external cell input resistors. The maximum allowed balancing current is 50 mA per cell.

The Host may activate one or more cell balancing FETs by writing the BAL_n bits in the BAL_CTL register. To allow the greatest flexibility, the Host has complete control over the balancing FETs. However, in order to avoid exceeding the maximum cell input voltage, the bq76925 will prevent two adjacent balancing FETs from being turned on simultaneously. If two adjacent bits in the balance control register are set to 1, neither balancing transistor will be turned on. The Host based balancing algorithm must also limit the power dissipation to the maximum ratings of the device.

In a normal system, closing a cell balancing FET will cause 2 cell voltages to appear across one cell input. This fact can be utilized to detect a cell sense-line open condition, i.e. a broken wire from the cell sense point to the bq76925 VCn input. Table 3 shows how this can be accomplished. Note that the normal cell voltage measurements may represent a saturated or full scale reading. However, these will normally be distinguishable from the open cell measurement.

Table 3. Open Cell Detection Method

Kelvin input to test	Method 1				Method 2			
	Turn On	Measure	Result		Turn On	Measure	Result	
			Normal	Open			Normal	Open
VC0	BAL_1	CELL2	CELL2 + 0.5 × CELL1	CELL2				
VC1	BAL_2	CELL3	CELL3 + 0.5 × CELL2	CELL3				
VC2	BAL_3	CELL4	CELL4 + 0.5 × CELL3	CELL4	BAL_2	CELL1	CELL1 + 0.5 × CELL2	CELL1
VC3	BAL_4	CELL5	CELL5 + 0.5 × CELL4	CELL5	BAL_3	CELL2	CELL2 + 0.5 × CELL3	CELL2
VC4	BAL_5	CELL6	CELL6 + 0.5 × CELL5	CELL6	BAL_4	CELL3	CELL3 + 0.5 × CELL4	CELL3
VC5					BAL_5	CELL4	CELL4 + 0.5 × CELL5	CELL4
VC6					BAL_6	CELL5	CELL5 + 0.5 × CELL6	CELL5

It should be noted that the cell amplifier headroom limits discussed above apply to the open cell detection method because by virtue of closing a switch between 2 cell inputs, internally to the device this appears as an extreme cell imbalance. Therefore, when testing for an open on CELL2 by closing the CELL1 balancing FET, the CELL2 measurement will be less than the expected normal result due to gain loss caused by the imbalance. However, the CELL2 measurement will still increase under this condition so that a difference between open (no change) and normal (measured voltage increases) can be detected.

Host Interface

The Host communicates with the AFE via an I2C interface. A CRC byte may optionally be used to ensure robust operation. The CRC is calculated over all bytes in the message according to the polynomial $x^8 + x^2 + x + 1$.

I²C Addressing

In order to reduce communications overhead, the addressing scheme for the I2C interface combines the slave device address and device register addresses into a single 7-bit address as shown below.

ADDRESS[6:0] = (I2C_GROUP_ADDR[3:0] << 3) + REG_ADDR[4:0]

The I2C_GROUP_ADDR is a 4-bit value stored in the EEPROM. REG_ADDR is the 5-bit register address being accessed, and can range from 0x00 – 0x1F. The factory programmed value of the group address is ‘0100’. Contact TI if an alternative group address is required.

For the default I2C_GROUP_ADDR, the combined address can be formed as shown in Table 4.

Table 4. Combined I2C Address for Default Group Address

ADDRESS[6:0]		
6	**5**	**4:0**
0	1	Register address

Bus Write Command to bq76925

The Host writes to the registers of the bq76925 as shown in Figure 7. The bq76925 acknowledges each received byte by pulling the SDA line low during the acknowledge period.

The Host may optionally send a CRC after the Data byte as shown. The CRC for write commands is enabled by writing the CRC_EN bit in the CONFIG_2 register. If the CRC is not used, then the Host generates the Stop condition immediately after the bq76925 acknowledges receipt of the Data byte.

When the CRC is disabled, the bq76925 will act on the command on the first rising edge of SCL following the ACK of the Data byte. This occurs as part of the normal bus setup prior to a Stop. If a CRC byte is sent while the CRC is disabled, the first rising edge of the SCL following the ACK will be the clocking of the first bit of the CRC. The bq76925 does not distinguish these two cases. In both cases, the command will complete normally, and in the latter case the CRC will be ignored.

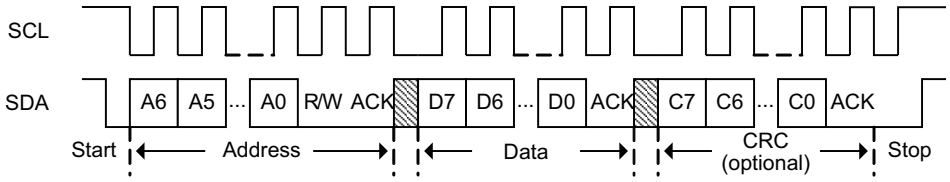

Figure 7. I²C Write Command

Bus Read Command from bq76925

The Host reads from the registers of the bq76925 as shown in Figure 8. This protocol is similar to the write protocol, except that the slave now drives data back to the Host. The bq76925 acknowledges each received byte by pulling the SDA line low during the acknowledge period. When the bq76925 sends data back to the Host, the Host drives the acknowledge.

The Host may optionally request a CRC byte following the Data byte as shown. The CRC for read commands is always enabled, but not required. If the CRC is not used, then the Host simply NACK's the Data byte and then generates the Stop condition.

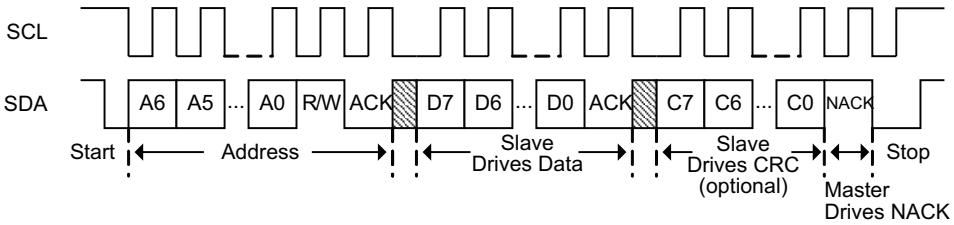

Figure 8. I²C Read Command

Register Map

Address	Name	Access	D7	D6	D5	D4	D3	D2	D1	D0
0x00	STATUS	R/W						ALERT	CRC_ERR	POR
0x01	CELL_CTL	R/W			VCOUT_SEL			CELL_SEL		
0x02	BAL_CTL	R/W			BAL_6	BAL_5	BAL_4	BAL_3	BAL_2	BAL_1
0x03	CONFIG_1	R/W	I_THRESH				I_COMP_POL	I_AMP_CAL		I_GAIN
0x04	CONFIG_2	R/W	CRC_EN							REF_SEL
0x05	POWER_CTL	R/W	SLEEP	SLEEP_DIS		I_COMP_EN	I_AMP_EN	VC_AMP_EN	VTB_EN	REF_EN
0x06	Reserved	R/W								
0x07	CHIP_ID	RO	CHIP_ID							
0x08 – 0x0F	Reserved	R/W								
0x10	VREF_CAL	EEPROM	VREF_OFFSET_CORR				VREF_GAIN_CORR			
0x11	VC1_CAL	EEPROM	VC1_OFFSET_CORR				VC1_GAIN_CORR			
0x12	VC2_CAL	EEPROM	VC2_OFFSET_CORR				VC2_GAIN_CORR			
0x13	VC3_CAL	EEPROM	VC3_OFFSET_CORR				VC3_GAIN_CORR			
0x14	VC4_CAL	EEPROM	VC4_OFFSET_CORR				VC4_GAIN_CORR			
0x15	VC5_CAL	EEPROM	VC5_OFFSET_CORR				VC5_GAIN_CORR			
0x16	VC6_CAL	EEPROM	VC6_OFFSET_CORR				VC6_GAIN_CORR			
0x17	VC_CAL_EXT_1	EEPROM	VC1_OC_4	VC1_GC_4	VC2_OC_4	VC2_GC_4				
0x18	VC_CAL_EXT_2	EEPROM	VC3_OC_4	VC3_GC_4	VC4_OC_4	VC4_GC_4	VC5_OC_4	VC5_GC_4	VC6_OC_4	VC6_GC_4
0x10 – 0x1A	Reserved	EEPROM								
0x1B	VREF_CAL_EXT	EEPROM					1	VREF_OC_5	VREF_OC_4	VREF_GC_4
0x1C – 0x1F	Reserved	EEPROM								

Register Descriptions

STATUS

Address	Name	Type	D7	D6	D5	D4	D3	D2	D1	D0
0x00	STATUS	R/W						ALERT	CRC_ERR	POR
		Defaults:	0	0	0	0	0	0	0	1

ALERT : Over-current alert. Reflects state of the over-current comparator. ‘1’ = over-current.

CRC_ERR : CRC error status. Updated on every I^2C write packet when CRC_EN = ‘1’. ‘1’ = CRC error.

POR : Power on reset flag. Set on each power-up and wake-up from sleep. May be cleared by writing with ‘0’.

CELL_CTL

Address	Name	Type	D7(1)	D6	D5	D4	D3	D2	D1	D0
0x01	CELL_CTL	R/W			VCOUT_SEL			CELL_SEL		
		Defaults:	0	0		0	0	0		

(1) This bit must be kept = 0

VCOUT_SEL : VCOUT MUX select. Selects the VCOUT pin function as follows.

VCOUT_SEL	VCOUT
0 0	VSS
0 1	VCn (n determined by CELL_SEL)
1 0	VREF × 0.5
1 1	VREF × 0.85

CELL_SEL : Cell select. Selects the VCn input for output on VCOUT when VCOUT_SEL = ‘01’.

VCOUT_SEL	CELL_SEL	VCOUT
0 1	0 0 0	VC1
0 1	0 0 1	VC2

VCOUT_SEL	CELL_SEL	VCOUT
0 1	0 1 0	VC3
0 1	0 1 1	VC4
0 1	1 0 0	VC5
0 1	1 0 1	VC6
0 1	1 1 0	$V_{TEMP,INT}$
0 1	1 1 1	Hi-Z

BAL_CTL

Address	Name	Type	D7	D6	D5	D4	D3	D2	D1	D0
0x02	BAL_CTL	R/W			BAL_6	BAL_5	BAL_4	BAL_3	BAL_2	BAL_1
		Defaults:	0	0	0	0	0	0	0	0

BAL_n : Balance control for cell n. When set, turns on balancing transistor for cell n. Setting of two adjacent balance controls is not permitted. If two adjacent balance controls are set, neither cell balancing transistor will be turned on. However, the BAL_n bits will retain their values.

CONFIG_1

Address	Name	Type	D7	D6	D5	D4	D3	D2	D1	D0
0x03	CONFIG_1	R/W	I_THRESH				I_COMP_POL	I_AMP_CAL		I_GAIN
		Defaults:	0				0	0	0	0

I_THRESH : Current comparator threshold. Sets the threshold of the current comparator as follows:

I_THRESH	Comparator threshold
0x0	25 mV
0x1	50 mV
0x2	75 mV
0x3	100 mV
0x4	125 mV
0x5	150 mV
0x6	175 mV
0x7	200 mV
0x8	225 mV
0x9	250 mV
0xA	275 mV
0xB	300 mV
0xC	325 mV
0xD	350 mV
0xE	375 mV
0xF	400 mV

I_COMP_POL : Current comparator polarity select. When ‘0’, trips on discharge current (SENSEP > SENSEN). When ‘1’, trips on charge current (SENSEP < SENSEN).

I_AMP_CAL : Current amplifier calibration. When ‘0’, current amplifier reports SENSEN with respect to VSS. When ‘1’, current amplifier reports SENSEP with respect to VSS. This bit can be used for offset cancellation as described under OPERATIONAL OVERVIEW.

I_GAIN : Current amplifier gain. Sets the nominal gain of the current amplifier as follows.

I_GAIN	Current amp gain
0	4
1	8

CONFIG_2

Address	Name	Type	D7	D6	D5	D4	D3	D2	D1	D0
0x04	CONFIG_2	R/W	CRC_EN							REF_SEL
		Defaults:	0	0	0	0	0	0	0	0

CRC_EN : CRC enable. Enables CRC comparison on write. When ‘1’, CRC is enabled. CRC on read is always enabled but is optional for Host.

REF_SEL : Reference voltage selection. Sets reference voltage output on VREF pin, cell voltage amplifier gain and VIOUT output range.

REF_SEL	VREF (V)	VCOUT Gain	VIOUT Output Range (V)
0	1.5	0.3	0.25 – 1.25
1	3.0	0.6	0.5 – 2.5

POWER_CTL

Address	Name	Type	D7	D6	D5	D4	D3	D2	D1	D0
0x05	POWER_CTL	R/W	SLEEP	SLEEP_DIS		I_COMP_EN	I_AMP_EN	VC_AMP_EN	VTB_EN	REF_EN
		Defaults:	0	0	0	0	0	0	0	0

SLEEP : Sleep control. Set to ‘1’ to put device to sleep

SLEEP_DIS : Sleep mode disable. When ‘1’, disables the sleep mode.

I_COMP_EN : Current comparator enable. When ‘1’, comparator is enabled. Disable to save power.

I_AMP_EN : Current amplifier enable. When ‘1’, current amplifier is enabled. Disable to save power.

VC_AMP_EN : Cell amplifier enable. When ‘1’, cell amplifier is enabled. Disable to save power.

VTB_EN : Thermistor bias enable. When ‘1’, the VTB pin is internally switched to the V3P3 voltage.

REF_EN : Voltage reference enable. When ‘1’, the 1.5 / 3.0 V reference is enabled. Disable to save power

CHIP_ID

Address	Name	Type	D7	D6	D5	D4	D3	D2	D1	D0
0x07	CHIP_ID	RO	CHIP_ID							
		Defaults:	0x10							

CHIP_ID : Silicon version identifier.

VREF_CAL

Address	Name	Type	D7	D6	D5	D4	D3	D2	D1	D0
0x10	VREF_CAL	EEPROM	VREF_OFFSET_CORR				VREF_GAIN_CORR			

VREF_OFFSET_CORR : Lower 4 bits of offset correction factor for reference output. The complete offset correction factor is obtained by concatenating this value with the the two most significant bits VREF_OC_5 and VREF_OC_4, which are stored in the VREF_CAL_EXT register. The final value is a 6-bit signed 2’s complement number in the range -32 to +31 with a value of 1 mV per lsb. See description of usage in OPERATIONAL OVERVIEW.

VREF_GAIN_CORR : Lower 4 bits of gain correction factor for reference output. The complete gain correction factor is obtained by concatenating this value with the most significant bit VREF_GC_4, which is stored in the VREF_CAL_EXT register. The final value is a 5-bit signed 2's complement number in the range -16 to +15 with a value of 0.1% per lsb. See description of usage in OPERATIONAL OVERVIEW.

VC1_CAL

Address	Name	Type	D7	D6	D5	D4	D3	D2	D1	D0
0x11	VC1_CAL	EEPROM	VC1_OFFSET_CORR				VC1_GAIN_CORR			

VC1_OFFSET_CORR : Lower 4 bits of offset correction factor for cell 1 translation. The complete offset correction factor is obtained by concatenating this value with the most significant bit VC1_OC_4, which is stored in the VC_CAL_EXT_1 register. The final value is a 5-bit signed 2's complement number in the range -16 to +15 with a value of 1 mV per lsb. See description of usage in OPERATIONAL OVERVIEW.

VC1_GAIN_CORR : Lower 4 bits of gain correction factor for cell 1 translation. The complete gain correction factor is obtained by concatenating this value with the most significant bit VC1_GC_4, which is stored in the VC_CAL_EXT_1 register. The final value is a 5-bit signed 2's complement number in the range -16 to +15 with a value of 0.1% per lsb. See description of usage in OPERATIONAL OVERVIEW.

VC2_CAL

Address	Name	Type	D7	D6	D5	D4	D3	D2	D1	D0
0x12	VC2_CAL	EEPROM	VC2_OFFSET_CORR				VC2_GAIN_CORR			

VC2_OFFSET_CORR : Lower 4 bits of offset correction factor for cell 2 translation. The complete offset correction factor is obtained by concatenating this value with the most significant bit VC2_OC_4, which is stored in the VC_CAL_EXT_1 register. The final value is a 5-bit signed 2's complement number in the range -16 to +15 with a value of 1 mV per lsb. See description of usage in OPERATIONAL OVERVIEW.

VC2_GAIN_CORR : Lower 4 bits of gain correction factor for cell 2 translation. The complete gain correction factor is obtained by concatenating this value with the most significant bit VC2_GC_4, which is stored in the VC_CAL_EXT_1 register. The final value is a 5-bit signed 2's complement number in the range -16 to +15 with a value of 0.1% per lsb. See description of usage in OPERATIONAL OVERVIEW.

VC3_CAL

Address	Name	Type	D7	D6	D5	D4	D3	D2	D1	D0
0x13	VC3_CAL	EEPROM	VC3_OFFSET_CORR				VC3_GAIN_CORR			

VC3_OFFSET_CORR : Lower 4 bits of offset correction factor for cell 3 translation. The complete offset correction factor is obtained by concatenating this value with the most significant bit VC3_OC_4, which is stored in the VC_CAL_EXT_2 register. The final value is a 5-bit signed 2's complement number in the range -16 to +15 with a value of 1 mV per lsb. See description of usage in OPERATIONAL OVERVIEW.

VC3_GAIN_CORR : Lower 4 bits of gain correction factor for cell 3 translation. The complete gain correction factor is obtained by concatenating this value with the most significant bit VC3_GC_4, which is stored in the VC_CAL_EXT_2 register. The final value is a 5-bit signed 2's complement number in the range -16 to +15 with a value of 0.1% per lsb. See description of usage in OPERATIONAL OVERVIEW.

VC4_CAL

Address	Name	Type	D7	D6	D5	D4	D3	D2	D1	D0
0x14	VC4_CAL	EEPROM	VC4_OFFSET_CORR				VC4_GAIN_CORR			

VC4_OFFSET_CORR : Lower 4 bits of offset correction factor for cell 4 translation. The complete offset correction factor is obtained by concatenating this value with the most significant bit VC4_OC_4, which is stored in the VC_CAL_EXT_2 register. The final value is a 5-bit signed 2's complement number in the range -16 to +15 with a value of 1 mV per lsb. See description of usage in OPERATIONAL OVERVIEW.

VC4_GAIN_CORR : Lower 4 bits of gain correction factor for cell 4 translation. The complete gain correction factor is obtained by concatenating this value with the most significant bit VC4_GC_4, which is stored in the VC_CAL_EXT_2 register. The final value is a 5-bit signed 2's complement number in the range -16 to +15 with a value of 0.1% per lsb. See description of usage in OPERATIONAL OVERVIEW.

VC5_CAL

Address	Name	Type	D7	D6	D5	D4	D3	D2	D1	D0
0x15	VC5_CAL	EEPROM	VC5_OFFSET_CORR				VC5_GAIN_CORR			

VC5_OFFSET_CORR : Lower 4 bits of offset correction factor for cell 5 translation. The complete offset correction factor is obtained by concatenating this value with the most significant bit VC5_OC_4, which is stored in the VC_CAL_EXT_2 register. The final value is a 5-bit signed 2's complement number in the range -16 to +15 with a value of 1 mV per lsb. See description of usage in OPERATIONAL OVERVIEW.

VC5_GAIN_CORR : Lower 4 bits of gain correction factor for cell 5 translation. The complete gain correction factor is obtained by concatenating this value with the most significant bit VC5_GC_4, which is stored in the VC_CAL_EXT_2 register. The final value is a 5-bit signed 2's complement number in the range -16 to +15 with a value of 0.1% per lsb. See description of usage in OPERATIONAL OVERVIEW.

VC6_CAL

Address	Name	Type	D7	D6	D5	D4	D3	D2	D1	D0
0x16	VC6_CAL	EEPROM	VC6_OFFSET_CORR				VC6_GAIN_CORR			

VC6_OFFSET_CORR : Lower 4 bits of offset correction factor for cell 6 translation. The complete offset correction factor is obtained by concatenating this value with the most significant bit VC6_OC_4, which is stored in the VC_CAL_EXT_2 register. The final value is a 5-bit signed 2's complement number in the range -16 to +15 with a value of 1 mV per lsb. See description of usage in OPERATIONAL OVERVIEW.

VC6_GAIN_CORR : Lower 4 bits of gain correction factor for cell 6 translation. The complete gain correction factor is obtained by concatenating this value with the most significant bit VC6_GC_4, which is stored in the VC_CAL_EXT_2 register. The final value is a 5-bit signed 2's complement number in the range -16 to +15 with a value of 0.1% per lsb. See description of usage in OPERATIONAL OVERVIEW.

VC_CAL_EXT_1

Address	Name	Type	D7	D6	D5	D4	D3	D2	D1	D0
0x17	VC_CAL_EXT_1	EEPROM	VC1_OC_4	VC1_GC_4	VC2_OC_4	VC2_GC_4				

VC1_OC_4 : Most significant bit of offset correction factor for cell 1 translation. See VC1_CAL register description for details.

VC1_GC_4 : Most significant bit of gain correction factor for cell 1 translation. See VC1_CAL register description for details.

VC2_OC_4 : Most significant bit of offset correction factor for cell 2 translation. See VC2_CAL register description for details.

VC2_GC_4 : Most significant bit of gain correction factor for cell 2 translation. See VC2_CAL register description for details.

VC_CAL_EXT_2

Address	Name	Type	D7	D6	D5	D4	D3	D2	D1	D0
0x18	VC_CAL_EXT_2	EEPROM	VC3_OC_4	VC3_GC_4	VC4_OC_4	VC4_GC_4	VC5_OC_4	VC5_GC_4	VC6_OC_4	VC6_GC4

VC3_OC_4 : Most significant bit of offset correction factor for cell 3 translation. See VC3_CAL register description for details.

VC3_GC_4 : Most significant bit of gain correction factor for cell 3 translation. See VC3_CAL register description for details.

VC4_OC_4 : Most significant bit of offset correction factor for cell 4 translation. See VC4_CAL register description for details.

VC4_GC_4 : Most significant bit of gain correction factor for cell 4 translation. See VC4_CAL register description for details.

VC5_OC_4 : Most significant bit of offset correction factor for cell 5 translation. See VC5_CAL register description for details.

VC5_GC_4 : Most significant bit of gain correction factor for cell 5 translation. See VC5_CAL register description for details.

VC6_OC_4 : Most significant bit of offset correction factor for cell 6 translation. See VC6_CAL register description for details.

VC6_GC_4 : Most significant bit of gain correction factor for cell 6 translation. See VC6_CAL register description for details.

VREF_CAL_EXT

Address	Name	Type	D7	D6	D5	D4	D3	D2	D1	D0
0x1B	VREF_CAL_EXT	EEPROM					1	VREF_OC_5	VCREF_OC_4	VREF_GC4

VREF_OC_5 : Most significant bit of offset correction factor for reference output. See VREF_CAL register description for details.

VREF_OC_4 : Next most significant bit of offset correction factor for reference output. See VREF_CAL register description for details.

VREF_GC_4 : Most significant bit of gain correction factor for reference output. See VREF_CAL register description for details.

PACKAGING INFORMATION

Orderable Device	Status [1]	Package Type	Package Drawing	Pins	Package Qty	Eco Plan [2]	Lead/ Ball Finish	MSL Peak Temp [3]	Samples (Requires Login)
BQ76925PW	ACTIVE	TSSOP	PW	20	1050	Green (RoHS & no Sb/Br)	CU NIPDAU	Level-2-260C-1 YEAR	
BQ76925PWR	ACTIVE	TSSOP	PW	20	2000	Green (RoHS & no Sb/Br)	CU NIPDAU	Level-2-260C-1 YEAR	

[1] The marketing status values are defined as follows:
ACTIVE: Product device recommended for new designs.
LIFEBUY: TI has announced that the device will be discontinued, and a lifetime-buy period is in effect.
NRND: Not recommended for new designs. Device is in production to support existing customers, but TI does not recommend using this part in a new design.
PREVIEW: Device has been announced but is not in production. Samples may or may not be available.
OBSOLETE: TI has discontinued the production of the device.

[2] Eco Plan - The planned eco-friendly classification: Pb-Free (RoHS), Pb-Free (RoHS Exempt), or Green (RoHS & no Sb/Br) - please check http://www.ti.com/productcontent for the latest availability information and additional product content details.
TBD: The Pb-Free/Green conversion plan has not been defined.
Pb-Free (RoHS): TI's terms "Lead-Free" or "Pb-Free" mean semiconductor products that are compatible with the current RoHS requirements for all 6 substances, including the requirement that lead not exceed 0.1% by weight in homogeneous materials. Where designed to be soldered at high temperatures, TI Pb-Free products are suitable for use in specified lead-free processes.
Pb-Free (RoHS Exempt): This component has a RoHS exemption for either 1) lead-based flip-chip solder bumps used between the die and package, or 2) lead-based die adhesive used between the die and leadframe. The component is otherwise considered Pb-Free (RoHS compatible) as defined above.
Green (RoHS & no Sb/Br): TI defines "Green" to mean Pb-Free (RoHS compatible), and free of Bromine (Br) and Antimony (Sb) based flame retardants (Br or Sb do not exceed 0.1% by weight in homogeneous material)

[3] MSL, Peak Temp. -- The Moisture Sensitivity Level rating according to the JEDEC industry standard classifications, and peak solder temperature.

TAPE AND REEL INFORMATION

REEL DIMENSIONS

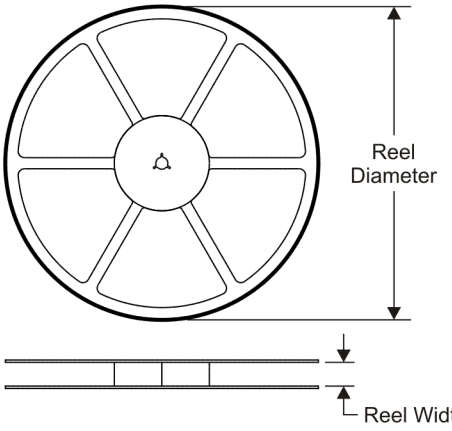

TAPE DIMENSIONS

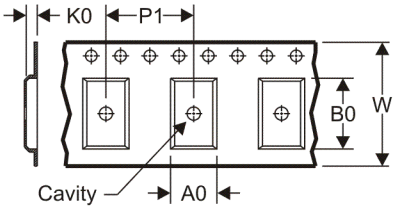

A0	Dimension designed to accommodate the component width
B0	Dimension designed to accommodate the component length
K0	Dimension designed to accommodate the component thickness
W	Overall width of the carrier tape
P1	Pitch between successive cavity centers

QUADRANT ASSIGNMENTS FOR PIN 1 ORIENTATION IN TAPE

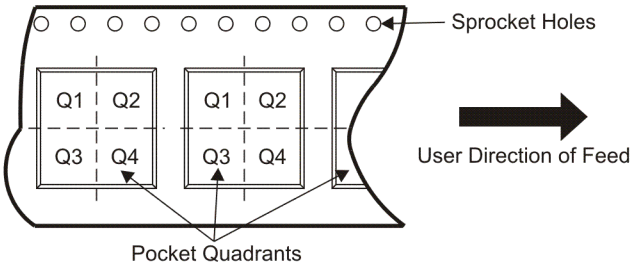

*All dimensions are nominal

Device	Package Type	Package Drawing	Pins	SPQ	Reel Diameter (mm)	Reel Width W1 (mm)	A0 (mm)	B0 (mm)	K0 (mm)	P1 (mm)	W (mm)	Pin1 Quadrant
BQ76925PWR	TSSOP	PW	20	2000	330.0	16.4	6.95	7.1	1.6	8.0	16.0	Q1

TAPE AND REEL BOX DIMENSIONS

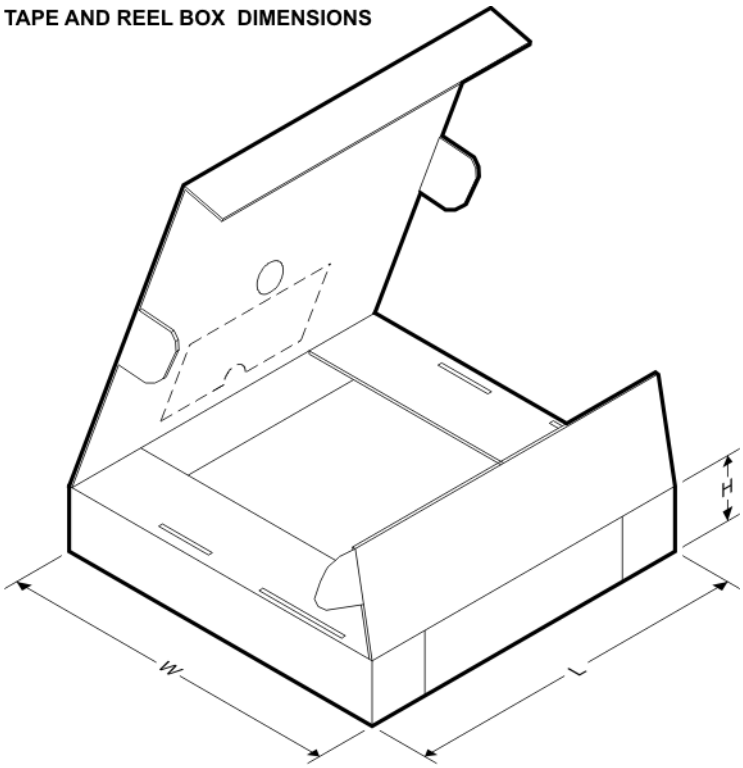

*All dimensions are nominal

Device	Package Type	Package Drawing	Pins	SPQ	Length (mm)	Width (mm)	Height (mm)
BQ76925PWR	TSSOP	PW	20	2000	346.0	346.0	33.0

PW (R-PDSO-G20) PLASTIC SMALL OUTLINE

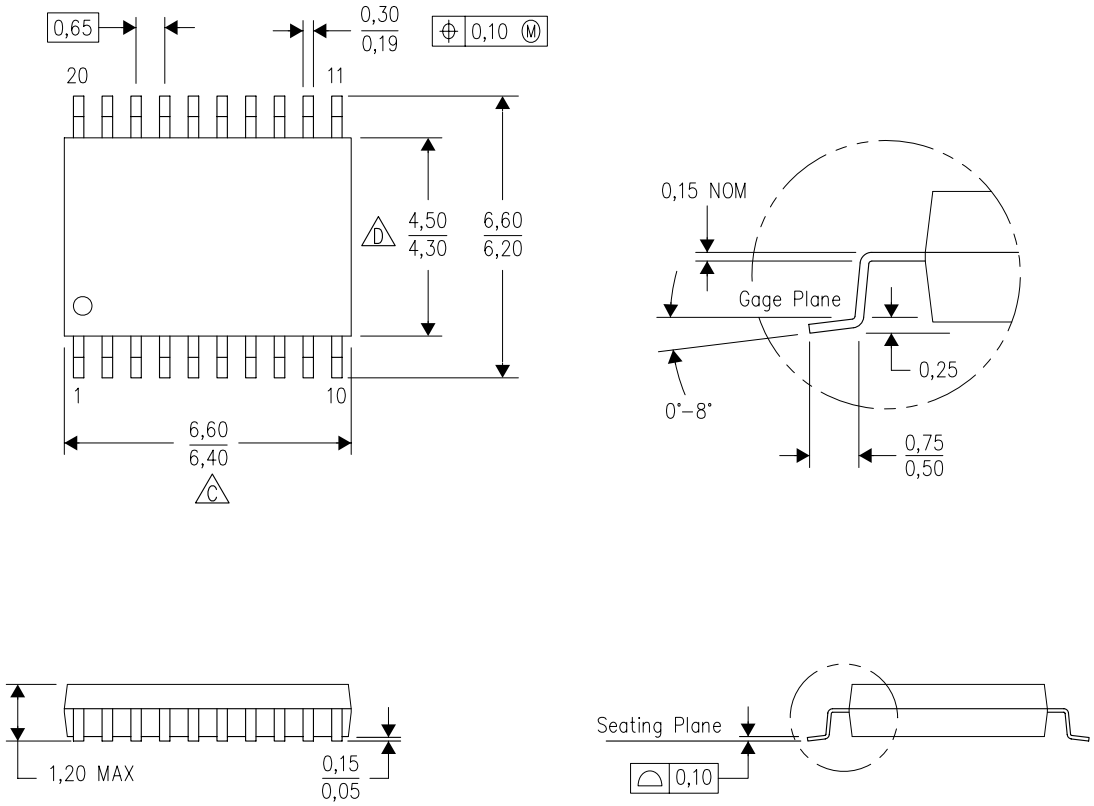

4040064-5/G 02/11

NOTES:
A. All linear dimensions are in millimeters. Dimensioning and tolerancing per ASME Y14.5M-1994.
B. This drawing is subject to change without notice.
C. Body length does not include mold flash, protrusions, or gate burrs. Mold flash, protrusions, or gate burrs shall not exceed 0,15 each side.
D. Body width does not include interlead flash. Interlead flash shall not exceed 0,25 each side.
E. Falls within JEDEC MO-153