TELEVISION SOUND COMBINATION

The TDA2791 contains the following functions:

- Limiter/amplifier
- F.M. detector.
- Physiological d.c. volume control.
- D.C. tone control.

The limiter/amplifier is designed as a four-stage differential amplifier, to obtain good noise and interference suppression. The detector is a balanced quadrature demodulator.

During VTR operation audio signals can be inserted before the tone and volume control circuits. The limiter amplifier and demodulator must be switched off by grounding pin 2. This switching action occurs without a d.c. shift, so that no transients will be noticed in the speaker. The circuit is very flexible in its application because the characteristics of the various controls can be adapted by changing external component values.

QUICK REFERENCE DATA

Supply voltage	$V_{13\text{-}3}$	typ.	12	V
Total current drain	I_{13}	typ.	61	mA
Frequency	f_o		5,5	MHz
Input voltage at start of limiting (r.m.s. value)	$V_{i(rms)}$	typ.	100	μV
A.M. rejection at V_i = 5 mV	α	typ.	60	dB
A.F. output voltage at $\Delta f = \pm$ 27 kHz (r.m.s. value) (at pin 7 after de-emphasis)	$V_{o(rms)}$	typ.	700	mV
D.C. bass control range		<	$^{+16}_{-19}$	dB
D.C. treble control range		<	$^{+12}_{-15}$	dB
D.C. volume control range		>	−75	dB

PACKAGE OUTLINE

16-lead DIL; plastic (SOT-38).

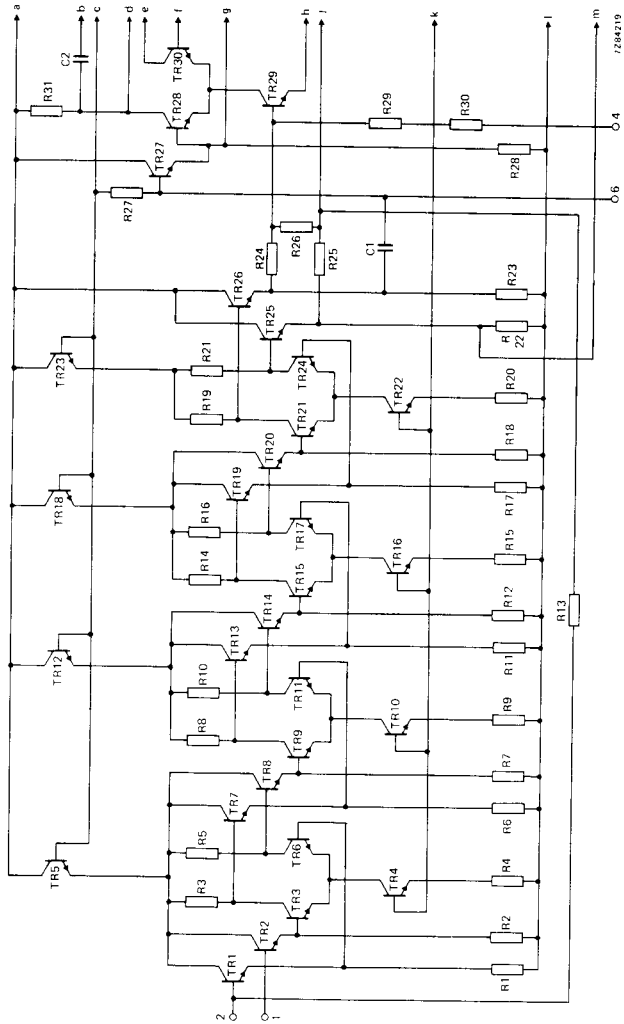

Fig. 1a Circuit diagram; continued in Fig. 1b.

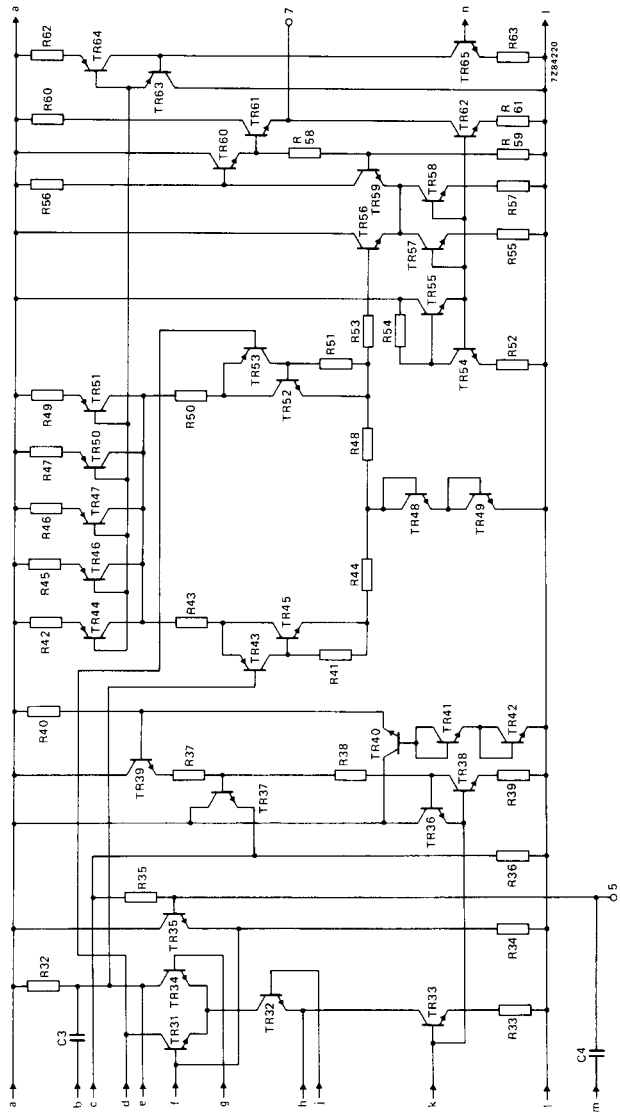

Fig. 1b Circuit diagram; continued from Fig. 1a; continued in Fig. 1c, for line 'n' see Fig. 1d.

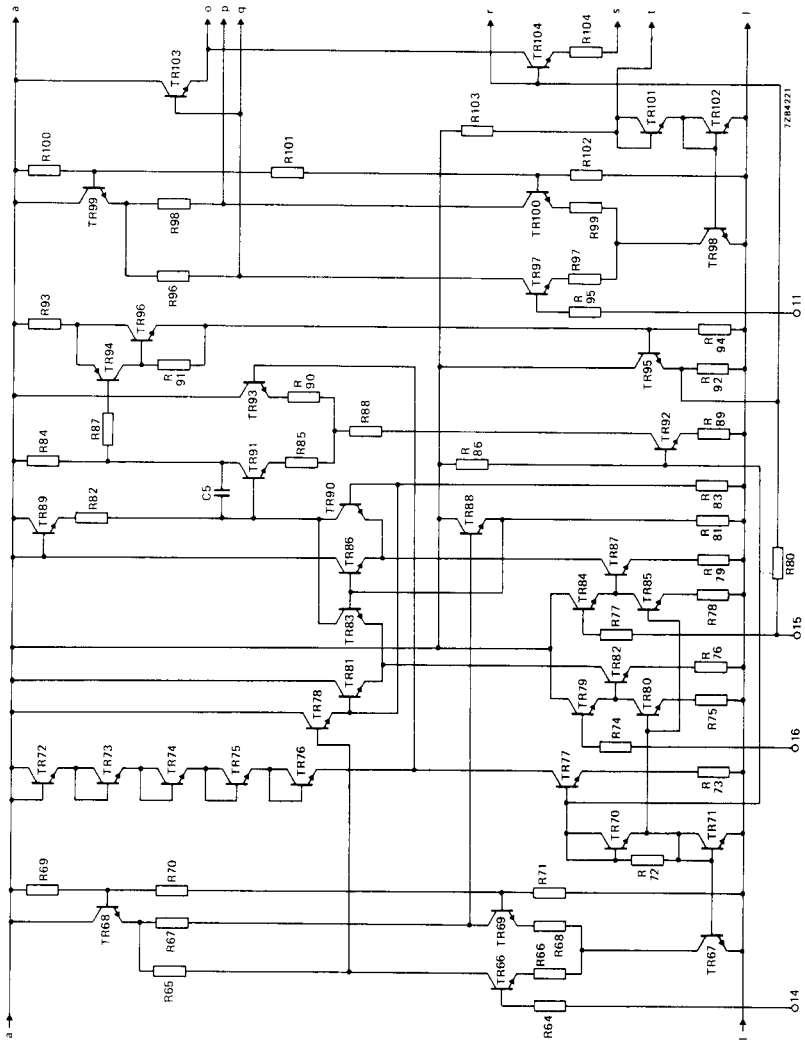

Fig. 1c Circuit diagram; continued from Fig. 1b; continued in Fig. 1d.

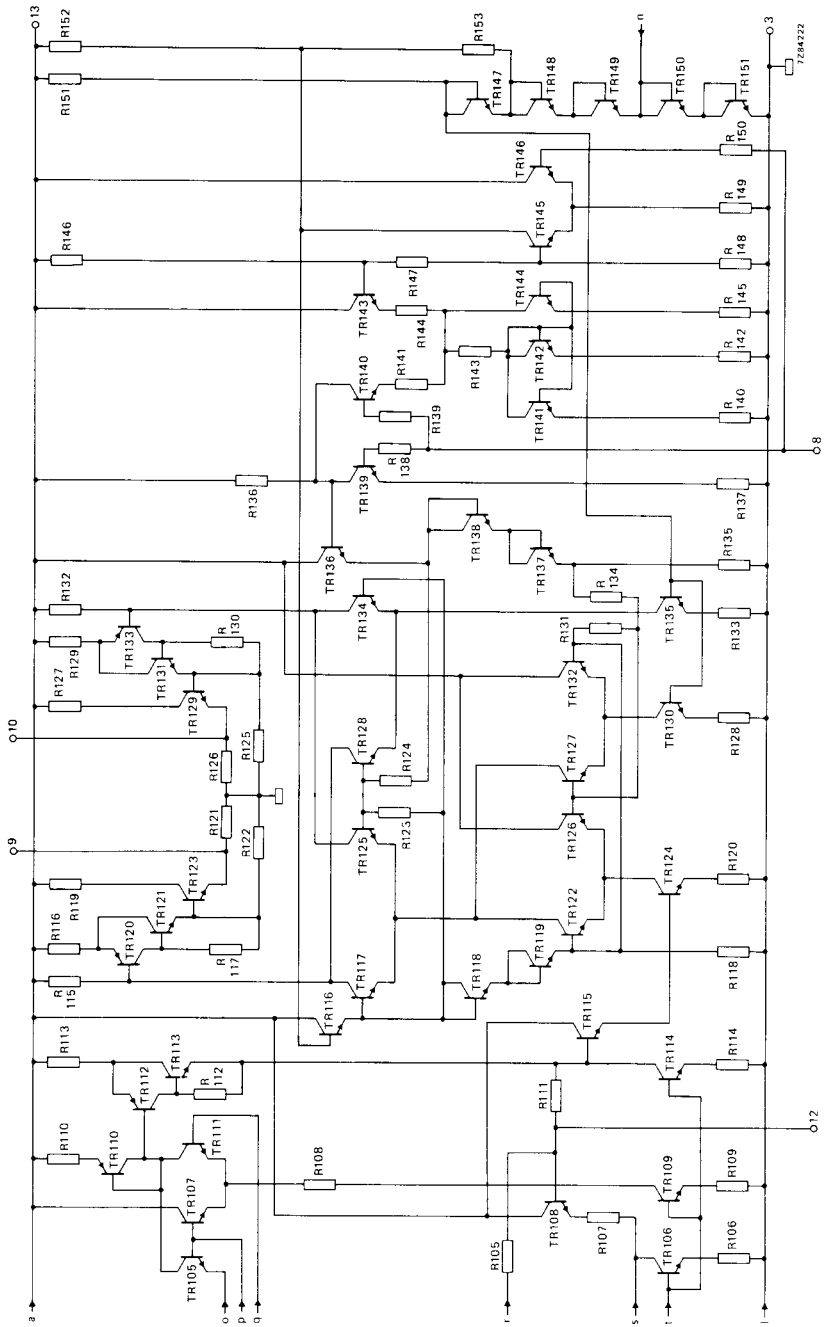

Fig. 1d Circuit diagram; continued from Fig. 1c and Fig. 1b.

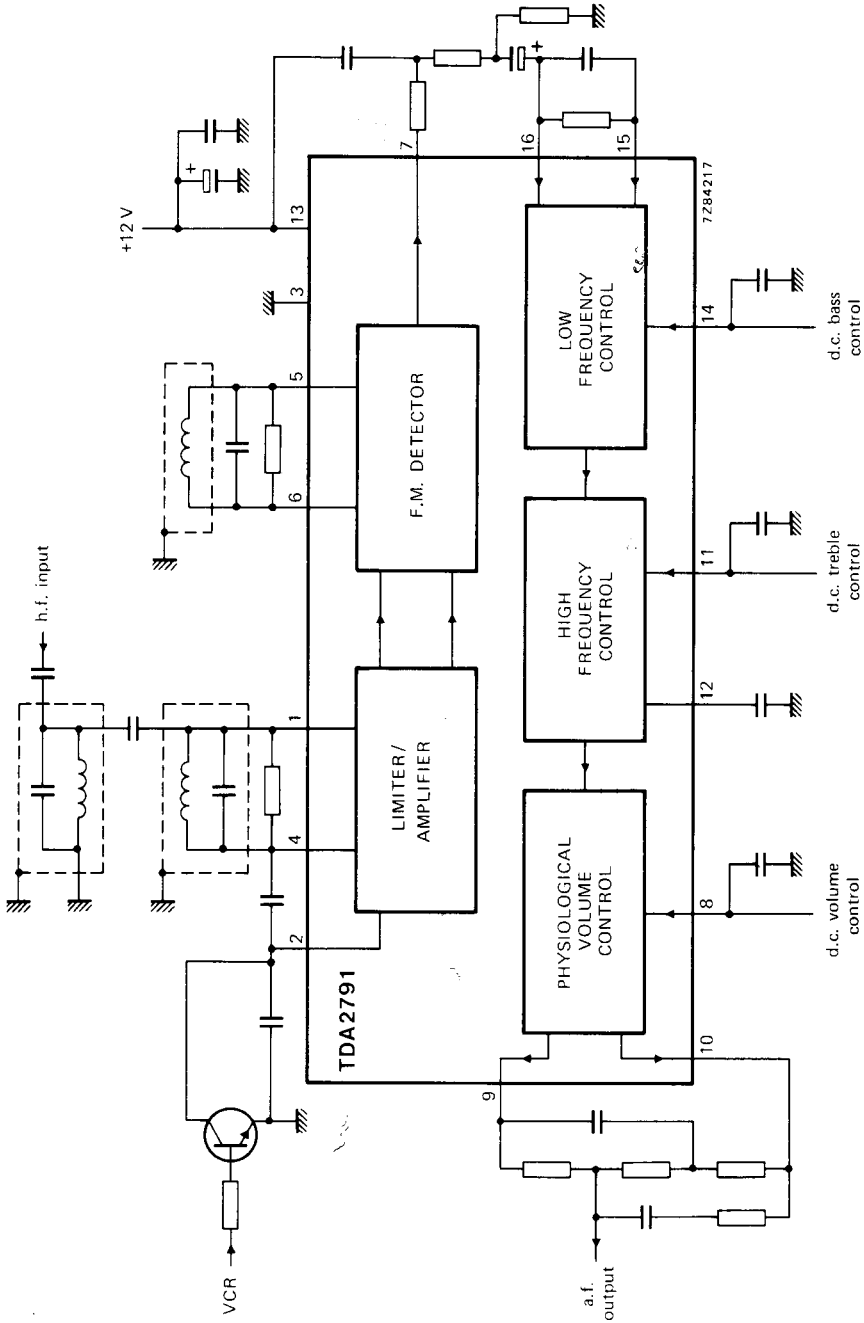

Fig. 2 Block diagram.

RATINGS

Limiting values in accordance with the Absolute Maximum System (IEC 134)

Supply voltage	$V_{13\text{-}3}$	max.	13,2 V

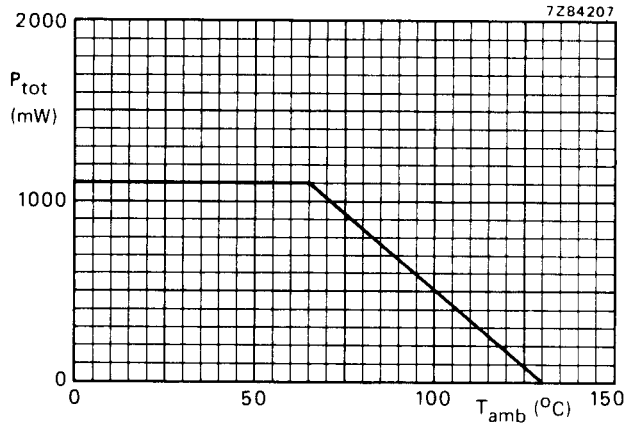

Fig. 3 Power derating curve.

Storage temperature	T_{stg}	−25 to + 130 °C
Operating ambient temperature	T_{amb}	−25 to + 65 °C

CHARACTERISTICS

Measured in Fig. 9 at T_{amb} = 25 °C; $V_{13\text{-}3}$ = 12 V; f = 5,5 MHz (unless otherwise specified)

Supply voltage range	$V_{13\text{-}3}$		10,8 to 13,2 V
Total current drain	I_{13}		43 to 79 mA
Limiter/amplifier/demodulator (note 1)			
Input limiting voltage at $V_{7\text{-}3}$ = −3 dB (r.m.s. value)	$V_{i(rms)}$	typ.	100 μV
Input impedance	$\|Z_{1\text{-}3}\|$	typ.	200 kΩ
A.M. rejection			
V_i = 0,5 mV (note 2)	α	typ.	50 dB
V_i = 1 mV (note 2)	α	typ.	50 dB
V_i = 5 mV (note 2)	α	typ.	60 dB
V_i = 50 mV (note 2)	α	typ.	55 dB
A.F. output voltage at pin 7 (r.m.s. value)			
f_m = 1 kHz; Δf = ± 27 kHz; V_i = 5 mV; Q_{L3} = 12,5	$V_{o(rms)}$	typ.	700 mV

Notes

1. The quadrature reference circuit must be tuned in such a way that there is no difference in the demodulator d.c. output voltage when the limiter input is switched from signal to no signal.
2. See test set-up Fig. 4.

CHARACTERISTICS (continued)

Total harmonic distortion at pin 7 f_m = 1 kHz; Δf = ± 27 kHz; V_i = 5 mV	d_{tot}	typ.	0,35	%
Zero-point stability at 30 μV to 10 mV; pin 7		typ.	2	kHz
Hum suppression; pin 7		typ.	20	dB
Signal-to-noise ratio at pin 7 f_m = 1 kHz; Δf = ± 27 kHz; V_i = 5 mV (note 1)	S/N	typ.	63	dB
Demodulator output impedance	$\|Z_{7\text{-}3}\|$	typ.	25	Ω
A.F. amplifier				
Input voltage bass control circuit at pin 16 (r.m.s. value) at Δf = ± 27 kHz	$V_{i(rms)}$	typ.	215	mV
Bass control	see graph, Fig. 5			
Input impedance	$\|Z_{14\text{-}3}\|$	typ.	500	kΩ
Treble control	see graph, Fig. 6			
Input impedance	$\|Z_{11\text{-}3}\|$	typ.	500	kΩ
Control voltages for flat frequency characteristic	$V_{11\text{-}3}$	typ.	3,2	V
	$V_{14\text{-}3}$	typ.	3,2	V
Volume control	see graph, Fig. 7			
Input current at $V_{8\text{-}3}$ = 4 V	I_8	typ.	40	μA
Physiological volume control (bass and treble compensation)	see graph, Fig. 8			
Voltage gain of audio part f = 1 kHz; $V_{11\text{-}3}$ = 3,2 V; $V_{14\text{-}3}$ = 3,2 V; $V_{8\text{-}3}$ = 4 V	G_v	typ.	4	dB
D.C. volume control range		>	−75	dB
Weighted signal-to-noise ratio $V_{i(rms)}$ = 215 mV; −24 dB volume control (notes 1 and 2)		typ.	56	dB
Total harmonic distortion at output f = 1 kHz; $V_{i(rms)}$ = 215 mV (related to max. output; note 2) at:				
0 dB	d_{tot}	typ.	0,2	%
−20 dB	d_{tot}	typ.	0,4	%

Notes
1. Specified according to DIN 45405; weighted noise (peak value).
2. Measured at flat-tone control characteristics.

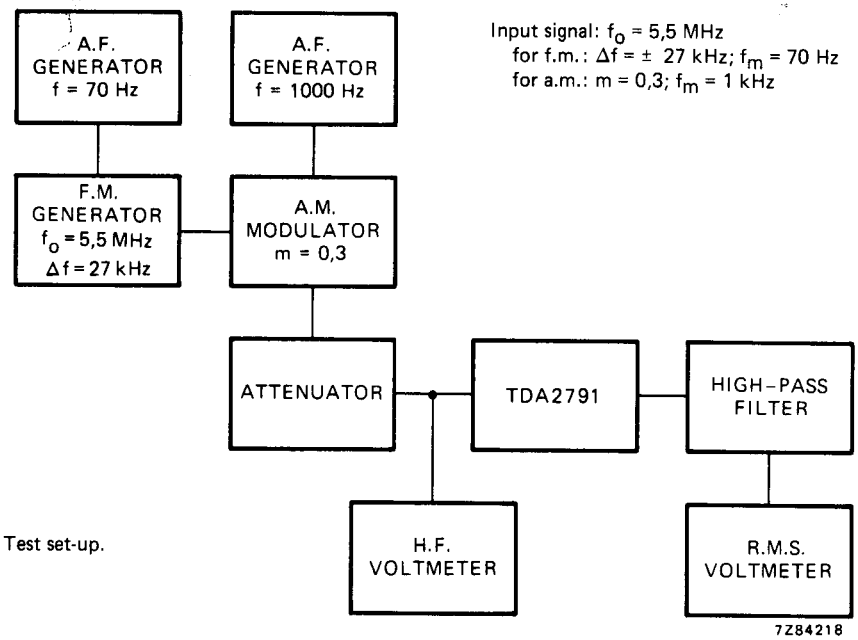

Input signal: f_o = 5,5 MHz
for f.m.: Δf = ± 27 kHz; f_m = 70 Hz
for a.m.: m = 0,3; f_m = 1 kHz

Fig. 4 Test set-up.

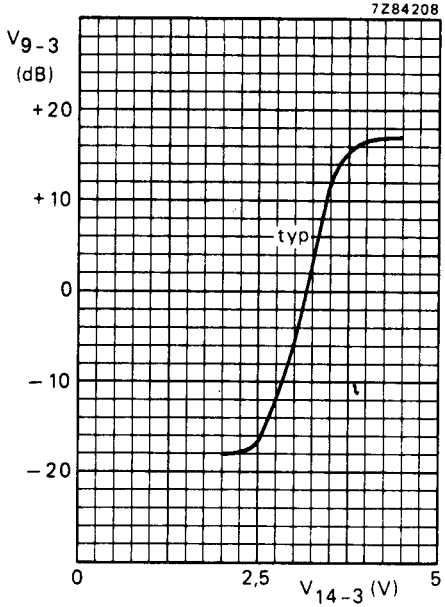

Fig. 5 Bass control curve; f = 40 Hz; V_{11-3} = 3,2 V; V_{8-3} = 4 V.

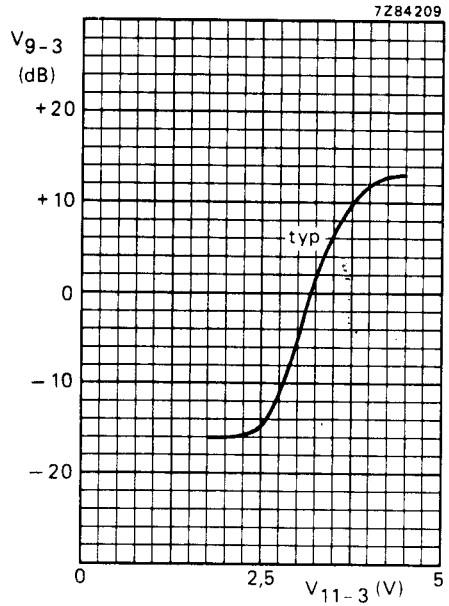

Fig. 6 Treble control curve; f = 15 kHz; V_{14-3} = 3,2 V; V_{8-3} = 4 V.

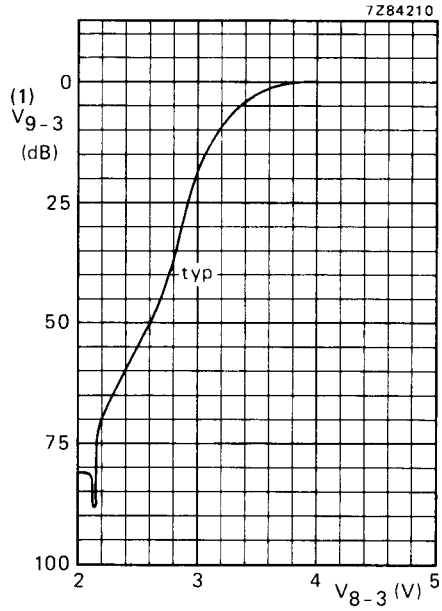

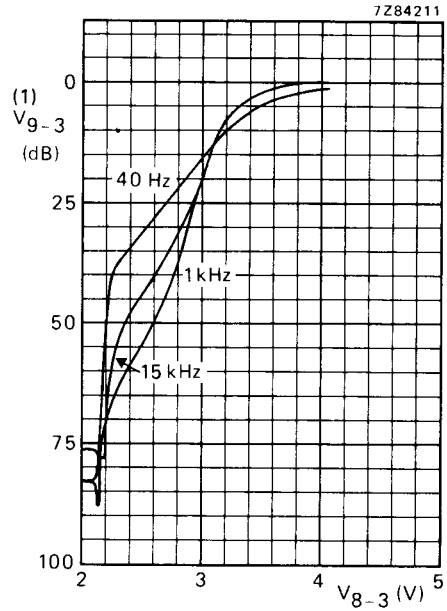

(1) This is actually the a.f. output voltage as shown in Fig. 9.

Fig. 7 Volume control curve; f = 1 kHz. V_{14-3} = 3,2 V; V_{11-3} = 3,2 V.

Fig. 8 Physiological volume control curves (typical values); V_{14-3} = 3,2 V; V_{11-3} = 3,2 V.

APPLICATION INFORMATION

The function is quoted against the corresponding pin number

1.	Limiter input.
2.	The decoupling capacitor for the internal limiter feedback is connected to this pin.
3.	Negative supply (ground).
4.	Limiter output for external feedback to pin 1.
5 and 6.	External tank circuit (demodulator reference signal).
7.	Demodulator output.
8.	D.C. volume control.
9 and 10.	External circuit for physiological volume control.
11.	D.C. treble control.
12.	External capacitor for treble control.
13.	Positive supply.
14.	D.C. bass control.
15 and 16.	External circuit for bass control.

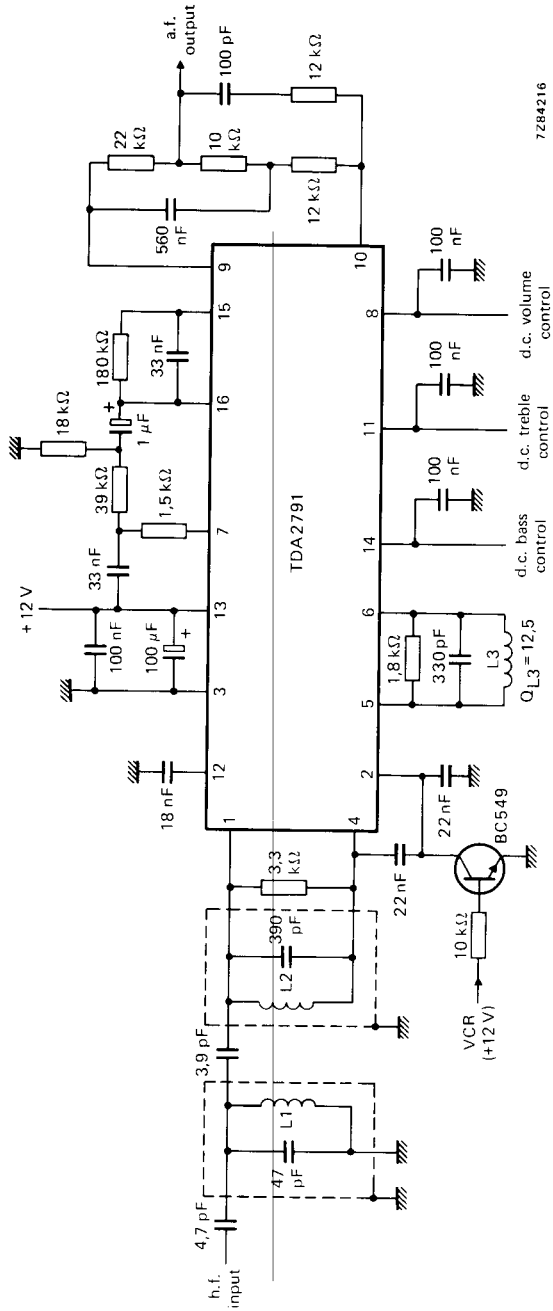

Fig. 9 Application circuit diagram.