TENTATIVE TOSHIBA BIPOLAR LINEAR INTEGRATED CIRCUIT SILICON MONOLITHIC

TA1310AN

NTSC VIDEO, CHROMA, DEFLECTION, AND DISTORTION COMPENSATION IC (WITH YUV INTERFACE AND ACB)

TA1310AN is Video Chroma and deflection signal. Processing IC for NTSC. On a 56-pin shrink DIP package. TA1310AN has deflection distortion compensation. TA1310AN uses an I^2C Bus controls for controllings and settings.

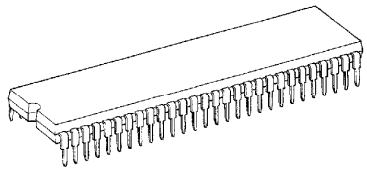

SDIP-56-P-600-1.78

Weight : 5.55 g (Typ.)

FEATURES

Video Signal Processing

- Built-in Y delay line
- Black stretch
- DC restoration ratio compensation
- Aperture controlled sharpness
- Output for velocity scan modulation (VSM)
- White peak suppression (WPS)

Chroma Signal Processing

- Built-in chroma BPF / TOF
- R-Y and B-Y outputs
- Color / BW situation output by read bus

980910EBA1

- TOSHIBA is continually working to improve the quality and the reliability of its products. Nevertheless, semiconductor devices in general can malfunction or fail due to their inherent electrical sensitivity and vulnerability to physical stress. It is the responsibility of the buyer, when utilizing TOSHIBA products, to observe standards of safety, and to avoid situations in which a malfunction or failure of a TOSHIBA product could cause loss of human life, bodily injury or damage to property. In developing your designs, please ensure that TOSHIBA products are used within specified operating ranges as set forth in the most recent products specifications. Also, please keep in mind the precautions and conditions set forth in the TOSHIBA Semiconductor Reliability Handbook.
- The products described in this document are subject to the foreign exchange and foreign trade laws.
- The information contained herein is presented only as a guide for the applications of our products. No responsibility is assumed by TOSHIBA CORPORATION for any infringements of intellectual property or other rights of the third parties which may result from its use. No license is granted by implication or otherwise under any intellectual property or other rights of TOSHIBA CORPORATION or others.
- The information contained herein is subject to change without notice.

Sync Signal Processing

- Counts down 32 f_H
- Dual AFC
- Vertical AGC
- HD and VD outputs
- Vertical frequency fixed mode
- Horizontal and Vertical position alignment
- DC outputs for vertical centering

Text Signal Processing

- Analog RGB inputs
- Digital RGB inputs
- Halftone switch (Y_M)
- Cutoff and drive alignment
- YUV inputs
- ACB

Deflection Correction Function

- Horizontal and Vertical amplitude adjustment
- Vertical linearity correction
- Vertical S correction
- Vertical EHT correction
- E / W parabola correction
- E / W corner correction
- E / W trapezium correction

BLOCK DIAGRAM

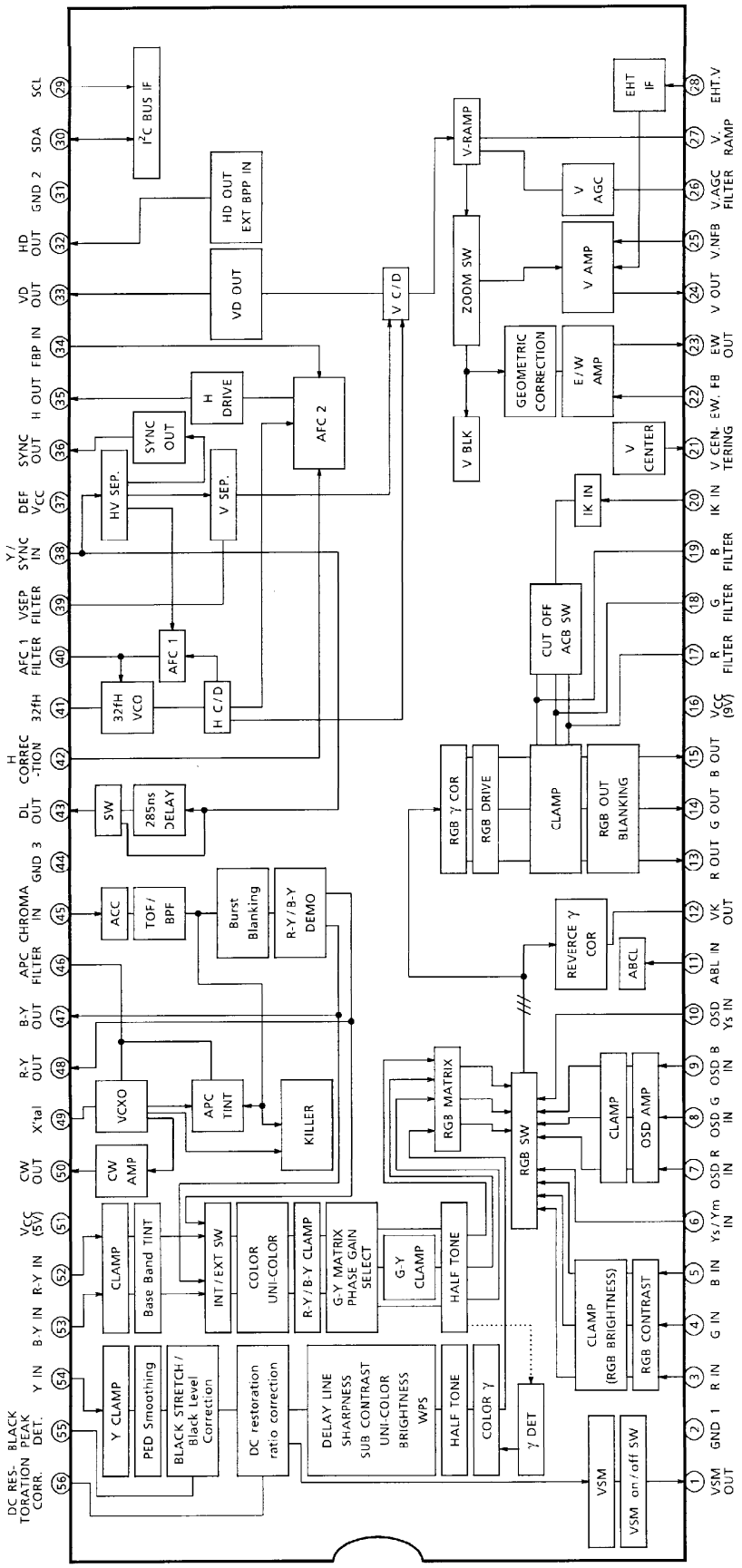

TA1310AN—3

PIN FUNCTION

PIN No.	SYMBOL	FUNCTION	INTERFACE	I / O SIGNAL
1	VSM OUT	VSM means Verocity Scanning Modulation.	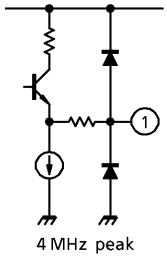	
2	GND I	The terminal for GND of Video / Y / TEXT circuits.	—	
3 4 5	R_{IN} G_{IN} B_{IN}	The terminals for Analog RGB signal input. Input signals clamped by coupling capacitors. (*) : Even when not in use, connect to GND with a coupling capacitor.	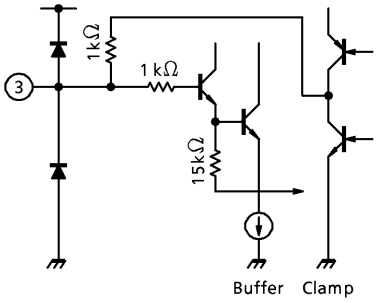	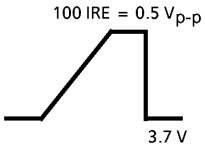
6	Y_S / Y_M IN	The terminal for switching of Analog RGB Mode and Half tone.	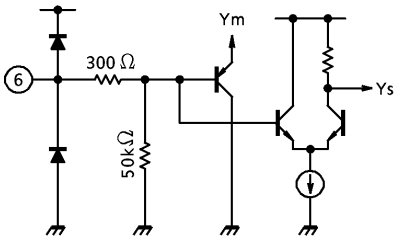	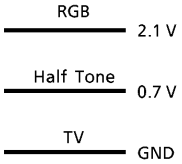
7 8 9	OSD R IN OSD G IN OSD B IN	The terminals for Analog OSD RGB signal input. Input signals clamped by coupling capacitors. (*) : Even when not in use, connect to GND with a coupling capacitor.	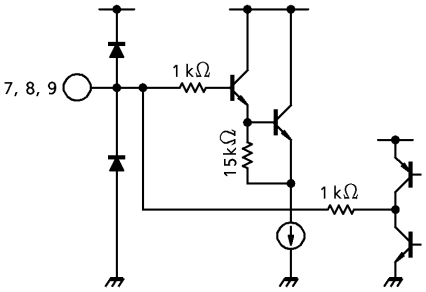	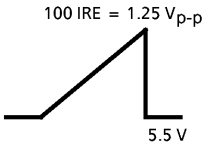

PIN No.	SYMBOL	FUNCTION	INTERFACE	I / O SIGNAL
10	OSD Y_S IN	The terminal for switching of internal RGB signals and Analog OSD RGB signals (Pin 7, 8, 9).	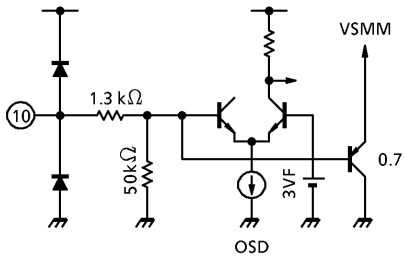	
11	ABL IN	The terminal for the external unicolor and brightness control. ABL Gain and ABL start point can be set by using BUS.	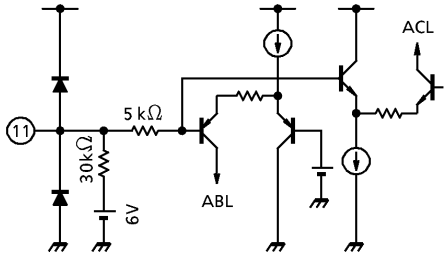	OPEN 6.0 V
12	VK OUT	The terminal outputs signal in order to input in H-correction (Pin 42). The signal corresponds to RGB signal.	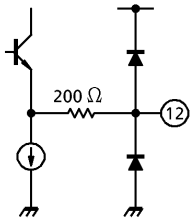	
13 14 15	R OUT G OUT B OUT	The terminals for RGB signal output.	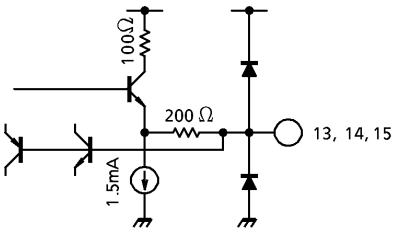	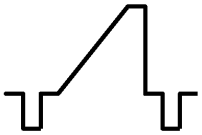
16	V_{CC} (9 V)	The terminal for V_{CC} Supply 9 V. The terminals is connected to 9 V (typ.).	—	
17 18 19	R Filter G Filter B Filter	Control the RGB output cutoff voltage, holding the standard pulse period comparator output to one vertical period. At ACB ON, the filters operate so that the IK IN (pin 20) voltage equals the value determined by the bus (when RBG cutoff : center, 1 V_{p-p}.) The filters must be low leakage current filters.	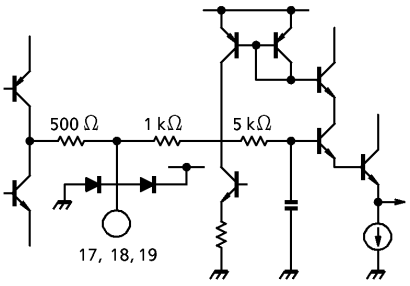	

PIN No.	SYMBOL	FUNCTION	INTERFACE	I/O SIGNAL
20	IK IN	Terminal for detection of IK feedback signal. Leakage canceller incorporated.	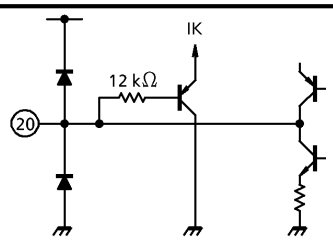	
21	V Centering	The terminal for the DAC output that controlled by BUS (V-center).	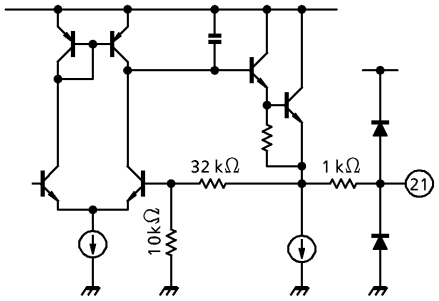	
22	EW FB	The terminal for E/W feedback.	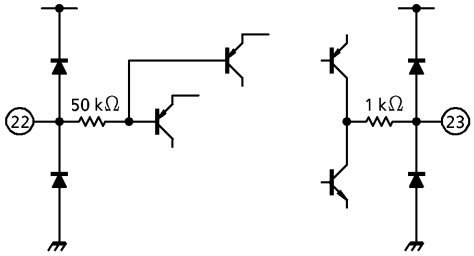	
23	EW OUT	The terminal for output of E/W drive signal.		
24	V OUT	The terminal for output of Vertical drive signal.	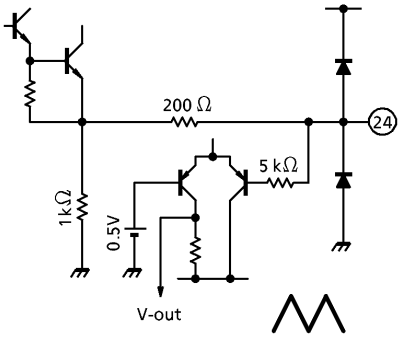	
25	V NFB	The terminal for input of Vertical negative feedback. If input voltage is less than 2 V, V-Guard function works and blanks RGB signal output.	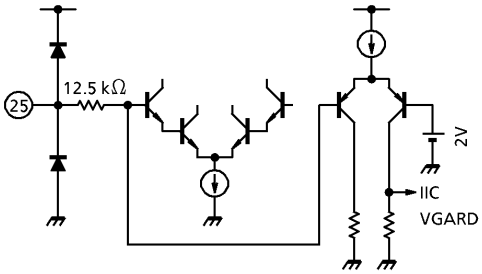	

PIN No.	SYMBOL	FUNCTION	INTERFACE	I/O SIGNAL
26	V AGC Filter	The terminal to be connected a capacitor for Automatic gain control of Vertical RAMP signal.	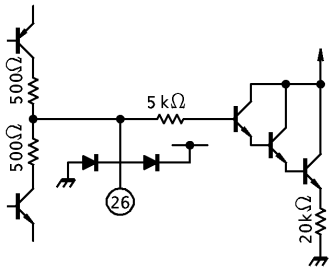	
27	V RAMP	The terminal to be connected a capacitor to generate Vertical RAMP signal.	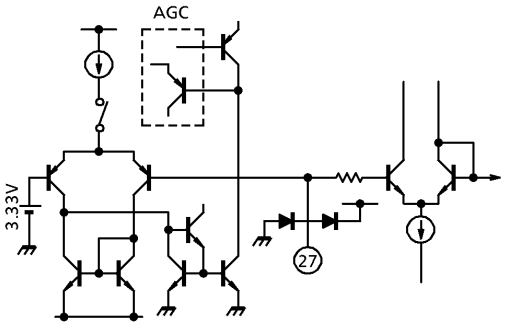	
28	EHT V	The terminal for the Vertical EHT input.	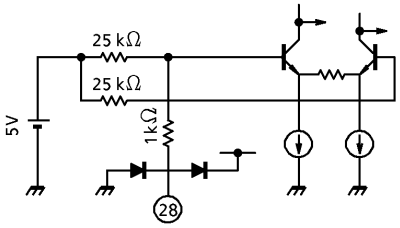	
29	SCL	The terminal for input of I²C BUS clock.	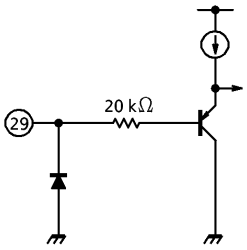	
30	SDA	The terminal for input/output of I²C BUS data.	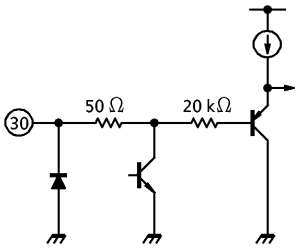	

PIN No.	SYMBOL	FUNCTION	INTERFACE	I / O SIGNAL
31	GND II	The terminal for the GND of DEF / I²C / EW.	—	
32	HD OUT	The terminal for the HD pulse. The suspension period of the Black peak stretching is extended by inputting the external pulse.	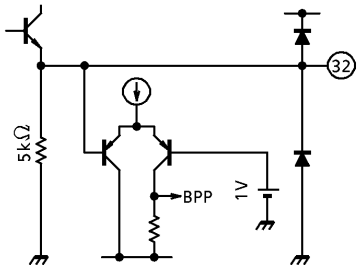	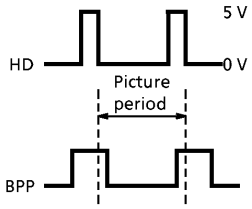
33	VD OUT	The terminal for the VD pulse.	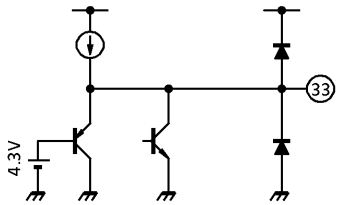	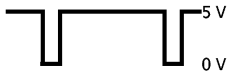
34	FBP IN	The terminal for the flyback pulse to control H-BLK and H-AFC.	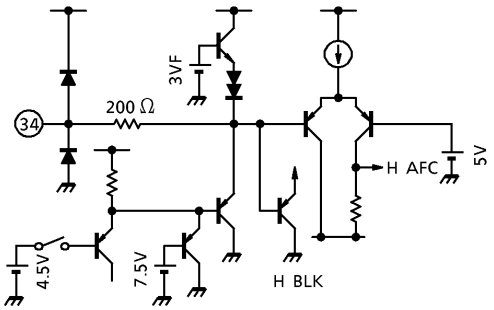	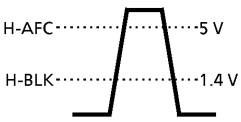
35	H OUT	The terminal for the Horizontal output.	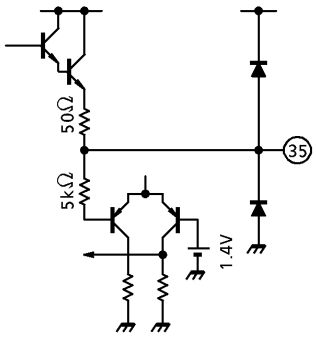	

PIN No.	SYMBOL	FUNCTION	INTERFACE	I/O SIGNAL
36	SYNC OUT	The terminal for output of the synchronizing signal that was separated in the synchronous separation circuit. This terminal is of the open collector system. Connect the pull-up resistor.	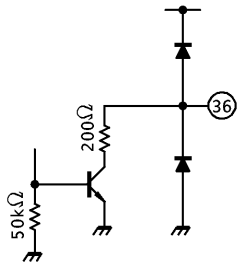	
37	DEF V_{CC}	The terminal for V_{CC} supply 9 V of DEF.	(Caution) Be sure to design the power supply so that when the power is Off, DEF V_{CC} is below 1.9 V.	
38	Y/SYNC IN	The terminal for input of the synchronous separation circuit. Input via clamp capacitor.	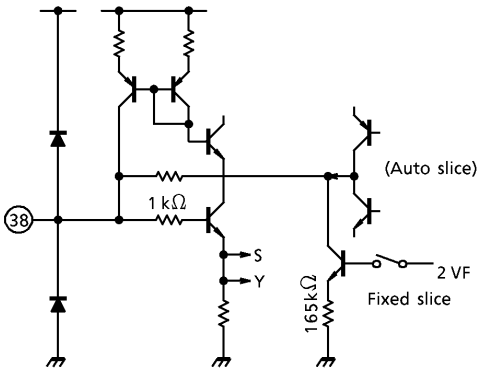	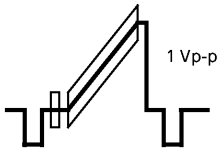
39	V SEP Filter	The terminal to be connected a capacitor for the Vertical synchronous separation circuit.	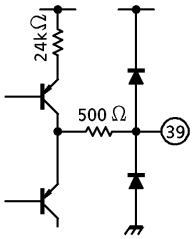	
40	AFC Ⅰ Filter	Connect the filter for horizontal AFC Ⅰ detection. The frequency of the horizontal output varies depending on the voltage at this pin.	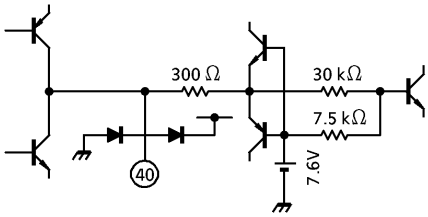	

PIN No.	SYMBOL	FUNCTION	INTERFACE	I / O SIGNAL
41	32 fh VCO	Connect the ceramic oscillator for horizontal oscillation. The oscillator to be used is CSB503F30, made by Murata electronics.	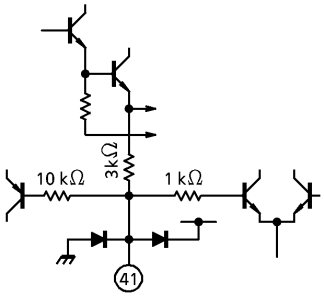	
42	H Correction	The terminal to correct distortion of picture in the case of high-tension fluctuation. Input the AC component of high tension fluctuation. This terminal can be inputted VK output (Pin 12).	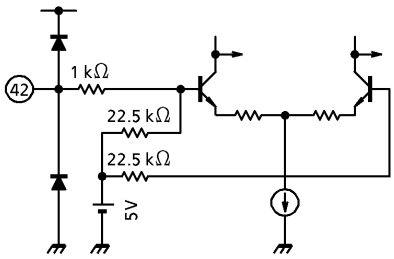	
43	DL OUT	The terminal outputs delayed Y signal. Input this signal to Y IN (Pin 54) via a capacitor.	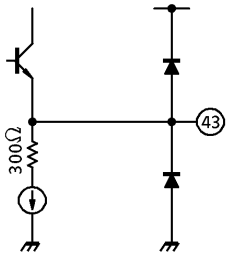	
44	GND III	The terminal for GND of DEF linear / Chroma circuits.	—	
45	CHROMA IN	The terminal for the chroma input.	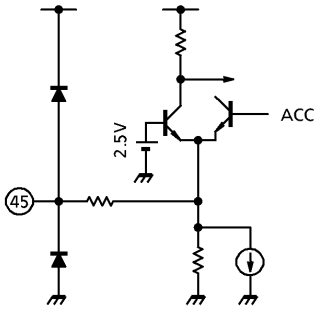	DC : 1.77 V AC : Burst 286 mV_{p-p}

PIN No.	SYMBOL	FUNCTION	INTERFACE	I / O SIGNAL
46	APC	The terminal to be connected APC filter. The oscillation frequency of VCXO varies depending on the voltage at this pin.	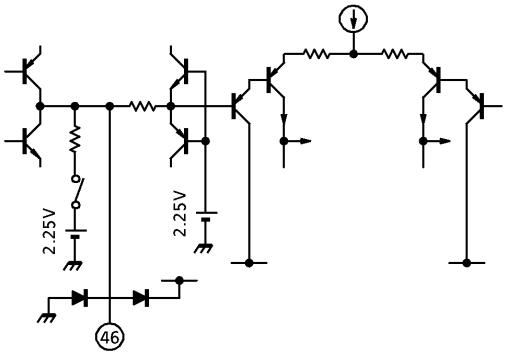	
47	B-Y OUT	The terminal outputs the B-Y signal.	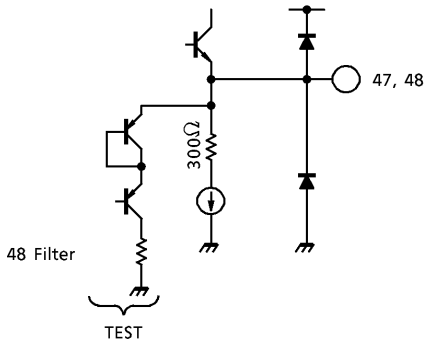	DC : 2.2 V AC : 300m V_{p-p} (Rainbow color bar)
48	R-Y OUT	The terminal outputs the R-Y signal.		DC : 2.2 V AC : 300 mV_{p-p} (Rainbow color bar)
49	X'tal	The terminal to be connected with a 3.579545 MHz X'tal oscillator. The oscillated frequency, f_0, is controlled by series capacitors, and frequency adjustment range can be expanded by putting capacitors in parallel.	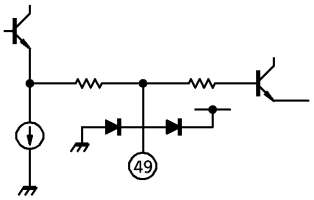	
50	CW OUT	The terminal for CW output generated in VCXO.	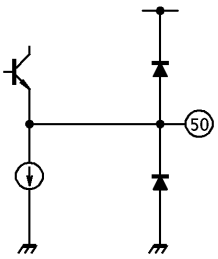	

PIN No.	SYMBOL	FUNCTION	INTERFACE	I / O SIGNAL
51	V_{CC} (5 V)	The terminal for V_{CC} supply 5 V.	—	
52 53	R-Y IN B-Y IN	The terminals for the R-Y / B-Y signal input. Input signals clamped by coupling capacitors. (*) : Even when not in use, connect to GND with a coupling capacitor.	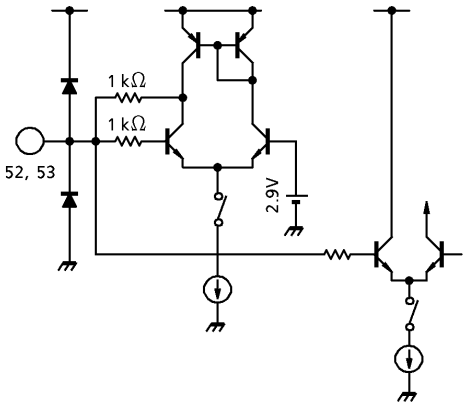	
54	Y IN	The terminal for the Y signal input. Input the Y signals clamped by coupling capacitors.	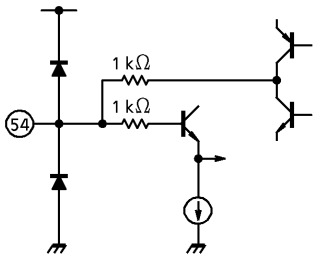	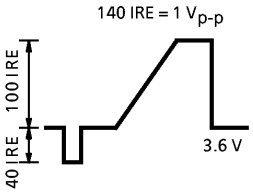
55	BLACK PEAK DET	The terminal to be connected the filter controlling the black stretching gain of the black stretching circuit. The black stretching gain varies depending on the voltage at this pin.	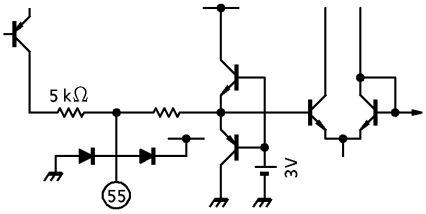	
56	DC RESTORATIO N CORR.	The terminal to be connected capacitor for DC restoration correction control. Open this pin if not use the DC restoration correction.	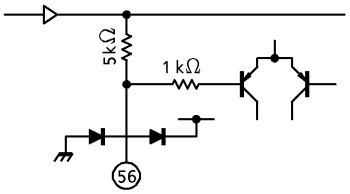	

BUS CONTROL MAP

Slave address : 88H (WRITE) / 89H (READ)

	D_7	D_6	D_5	D_4	D_3	D_2	D_1	D_0
00	ABL POINT		UNI-COLOR					
01	TEST	BRIGHTNESS						
02	Y-MUTE	COLOR						
03	TINT							TOF-SW
04	SHARPNESS						ABL GAIN	
05	RGB BRIGHTNESS				VERTICAL POSITION			UV-SW
06	G DRIVE GAIN							V-AGC
07	B DRIVE GAIN							VSM-G
08	R CUT OFF							
09	G CUT OFF							
0A	B CUT OFF							
0B	HORIZONTAL POSITION					B. S. POINT		
0C	VERTICAL SIZE						ZOOM	SERVICE
0D	HORIZONTAL SIZE						HV-FIX	
0E	E / W PARABOLA					V-S CORRECTION		
0F	V-LIN CORRECTION				SUB CONTRAST			
10	E / W TRAPEZIUM				E / W CORNER			
11	COL-γ	ACB MODE		V-BLK START PHASE				
12	RY / GY PHASE / GAIN		DL-MODE	V-BLK STOP PHASE				
13	VERTICAL CENTERING							RGB-γ
14	V CENTERING DAC SW	BASE BAND TINT						

READ MODE

	PORES	Y-IN	RGB-OUT	H-OUT	V-OUT	EW-OUT	COLOR	ED2

The preset value for D_7 is 1. The preset values for D_0 to D_6 are 0.

BUS CONTROL CHARACTERISTICS BY FUNCTION
Write mode

ITEM	DATA	No. OF BITS	PRESET VALUE
Unicolor (UNI-COLOR) / RGB Contrast	000000 ; – 18dB 111111 ; 0 dB	6	– 18 dB (000000)
Brightness (sub-brightness included) (BRIGHTNESS)	0000000 ; – 40 (IRE) 1111111 ; + 40 (IRE)	7	– 40 (IRE) (0000000)
Color (sub-color included) (COLOR)	0000000 ; – ∞ 1111111 ; + 6 dB	7	– ∞ (0000000)
Tint (sub-tint included) (TINT)	0000000 ; – 32° 1111111 ; + 32°	7	± 0° (1000000)
Picture Sharpness (PICTURE-SHARPNESS)	000000 ; – 6 dB 111111 ; + 12 dB (at 2.4 MHz)	6	+ 6 dB (100000)
Sub Contrast (SUB-CONTRAST)	0000 ; – 3 dB 1111 ; + 3 dB	4	– 3 dB (0000)
DC Output for Vertical Centering (VERTICAL CENTERING)	0000000 ; 1.0 V 1111111 ; 4.0 V	7	Center (1000000)
External / Internal Color Difference Switching (UV-SW)	0 ; INT 1 ; EXT	1	INT (0)
RGB Brightness (RGB-BRIGHTNESS)	0000 ; – 20 (IRE) 1111 ; + 20 (IRE)	4	Center (1000)
RGB Cut Off (RGB-CUTOFF)	00000000 ; – 0.5 V 11111111 ; + 0.5 V – At bus control – 00000000 ; 0.5 V_{p-p} 11111111 ; 1.5 V_{p-p} – IK input amplitude in ACB mode –	8 × 3	– 0.5 V (00000000)
G / B Drive Gain (GB-DRIVE GAIN)	0000000 ; – 5 dB 1111111 ; + 3 dB	7 × 2	Center (1000000)
VSM Gain (VSM-G)	0 ; ON 1 ; OFF	1	ON (0)
Zoom Mode Switching (ZOOM)	0 ; Normal 1 ; ZOOM	1	normal (0)
Black Stretching Start Point (B.S. POINT)	000 ; Min / black stretch off (black correction on) 111 ; MAX / 50 (IRE)	3	Black stretch OFF (000)
ABL Detection Voltage (ABL POINT)	00 ; MIN 11 ; MAX	2	Center (10)
ABL Sensitivity (ABL GAIN)	00 ; MIN 11 ; MAX	2	MIN (00)
Horizontal Position (HORIZONTAL POSITION)	00000 ; – 3 μs (left shift) 11111 ; + 3 μs	5	Center (10000)
Horizontal and Vertical Frequency Fixed Mode (HV-FIX)	00 / 01 ; normal 10 ; AFC OFF (Free run) & V = 263 (H) 11 ; AFC OFF (Free run) & V = 262.5 (H)	2	normal (00)
Vertical Pulse Phase (VERTICAL-PULSE PHASE)	000 ; 0H 111 ; 7H DELAY	3	0 (H) (000)
Service Mode (SERVICE)	0 ; normal 1 ; Service mode (V-Stop)	1	normal (0)
Test Mode (TEST MODE)	1 ; normal 0 ; RGB BLK OFF	1	normal (1)

ITEM	DATA	No. OF BITS	PRESET VALUE
TOF Switching (TOF-SW)	0 ; BPF mode 1 ; TOF mode	1	BPF (0)
V-AGC Time Constant (V-AGC)	0 ; fast 1 ; slow	1	fast (0)
Vertical Amplitude (VERTICAL SIZE)	000000 ; MIN 111111 ; MAX	6	Center (100000)
Vertical Linearity Correction (V-LIN CORRECTION)	0000 ; Lower stretch 1111 ; Upper stretch	4	Center (1000)
Vertical S Correction (V-S CORRECTION)	000 ; Reverse S MAX 111 ; S MAX	3	(000)
Horizontal Amplitude (HORIZONTAL SIZE)	000000 ; MAX 111111 ; MIN	6	Center (100000)
E / W Parabola Correction (E / W PARABOLA)	00000 ; MIN 11111 ; MAX	5	Center (10000)
E/W Corner Correction (E / W CORNER)	0000 ; Vertical expansion 1111 ; Vertical compression	4	(0000)
E / W Trapezium Correction (E / W TRAPEZIUM)	0000 ; Expansion upward 1111 ; Expansion downward	4	Center (1000)
Color γ Correction (COL-γ)	0 ; ON 1 ; OFF	1	OFF (1)
Y Mute (Y MUTE)	0 ; OFF 1 ; ON	1	ON (1)
RGB γ Correction (RGB-γ)	0 ; OFF 1 ; ON	1	OFF (0)
DL Mode Switching (DL-MODE)	0 ; Through 1 ; ON	1	Through (0)
ACB Mode Switching (ACB-MODE)	00 ; ACB OFF & S / H LOW 01 ; ACB OFF (Bus control) 10 ; ACB ON & I-DET normal 11 ; ACB ON & I-DET × 3	2	S / H LOW (00)
Relative Phase Amplitude Switching (RY / GY PHASE / GAIN)	00 ; NTSC STD 01 ; DVD STD 10 ; NTSC (T) 11 ; A-TV STD	2	TSB STD (10)
Vertical Blanking Start Phase (V-BLK START PHASE)	00000 ; Vth (Hi) 11111 ; Vth (Lo)	5	(00000)
Vertical Blanking Stop Phase (V-BLK STOP PHASE)	00000 ; Vth (Lo) 11111 ; Vth (Hi)	5	(00000)
Base Band Tint	0000000 ; + 60 deg 1111111 ; − 40 deg *1000000 (Center) : + 6 deg	7	Center (1000000)
V Centering DAC Output switch (V Centering DAC SW)	0 ; Interlocking E / W trapezium correction (E / W trapezium correction : ± 12.5%) 1 ; Non-interlocking E / W trapezium correction (E / W trapezium correction : ± 4.5%)	1	Non-interlocking (1)

READ MODE
Slave address : 89H

D_7	D_6	D_5	D_4	D_3	D_2	D_1	D_0
PONRES	Y-IN	RGB-OUT	H-OUT	V-OUT	EW-OUT	COLOR	ED2

ITEM	DATA
Power On Reset (PORES)	0 ; Normal 1 ; Resister preset
Color Mode (COLOR)	0 ; B / W 1 ; NTSC
Self Diagnosis Result Output (RGB-OUT / Y-IN / H-OUT / V-OUT / E-W OUT / UV-IN)	0 ; NG 1 ; OK
ED2 Indentification	0 ; non-ED2 1 ; ED2

I²C BUS COMMUNICATIONS, RECEIVE METHOD

Start and stop condition

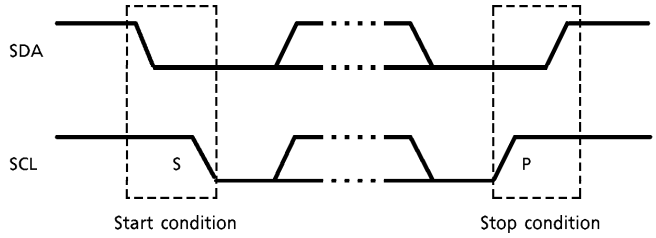

Bit transfer

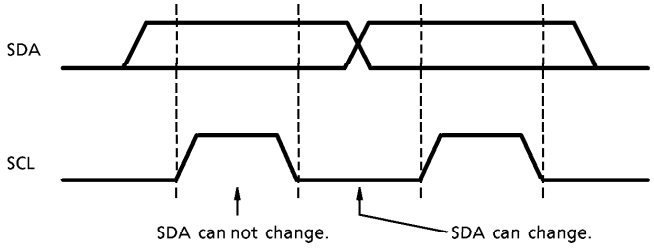

Acknowledgement

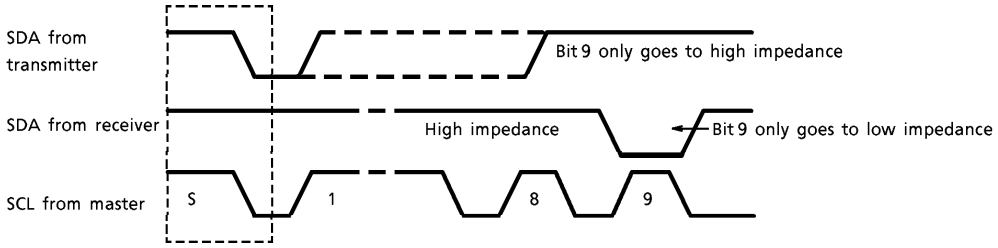

Data receive format

S	Slave address	1	A	Receive data 1	A	Receive data 2	A	P

↑ MSB 7 bits ↑ MSB 8 bits

When data are received, the master transmitter changes to a receiver immediately after the first acknowledgement and the slave receiver changes to a transmitter.
The master always creates the stop condition.

Details are provided in the Philips I²C specifications.

Option data transmit format

S	Slave address	0	A	1	Subaddress	A	Transmit data 1	. .	Transmit data n	A	P
↑ MSB	7 bits			↑ MSB	7 bits		↑ MSB 8 bits		↑ MSB 8 bits		

In the above method, the subaddresses are automatically incremented from the specified subaddress and data are set.

Purchase of TOSHIBA I²C components conveys license under the Philips I²C patent Rights to use these components in an I²C system, provided that the system conforms to the I²C standard specification as defined by Philips.

MAXIMUM RATINGS (Ta = 25°C)

CHARACTERISTICS	SYMBOL	RATING	UNIT
Power Supply Voltage (5 V / 9 V)	V_{CCmax}	7 / 12	V
Input Signal Voltage (5 V / 9 V)	einmax	5 / 9	V_{p-p}
Power Dissipation (Note)	P_D	1920	mW
Power Dissipation Reduction Rate	1 / Qja	15.4	mW / °C
Operating Temperature	T_{opr}	− 20~65	°C
Storage Temperature	T_{stg}	− 55~150	°C

(Note) : See the figure below.

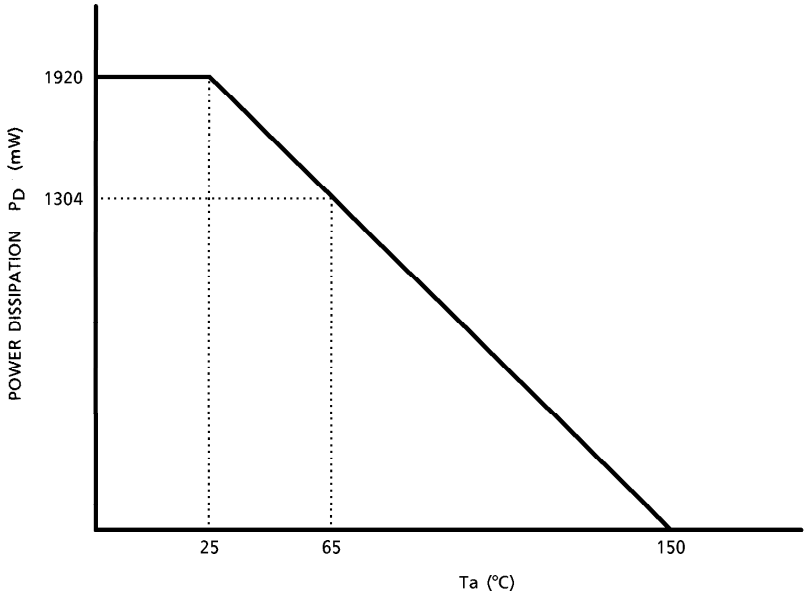

Fig. Temperature reduction curve for power dissipation

RECOMMENDED OPERATING POWER SUPPLY VOLTAGE

ITEM	DATA AND CONDITIONS	MIN	TYP.	MAX	UNIT
Power Supply Voltage	Pin 16, Pin 37	8.7	9.0	9.3	V
	Pin 51	4.8	5.0	5.2	
Pin 54 Y Input Signal Level	100% white, including synchronization	0.9	1.0	1.1	V_{p-p}
Pin 45 Chroma Input Signal Level	TOF : off, burst level	100	300	400	mV_{p-p}
	TOF : on, burst level	100	300	400	
Pin 38 Sync Signal Input Level	100% white, including synchronization	0.9	1.0	1.1	V_{p-p}

(Note) : Be sure to design the power supply so that when the power is Off, DEF V_{CC} is below 1.9 V.

ELECTRICAL CHARACTERISTICS
(V_{CC} = 5 V / 9 V, DEF V_{CC} = 9 V, Ta = 25°C ± 3°C, unless otherwise specified)
Current dissipation

PIN NAME	SYMBOL	TEST CIR-CUIT	CURRENT DISSIPATION			UNIT	REMARKS
			MIN	TYP.	MAX		
5 V V_{CC}	I_{CC1}	—	32.50	38.34	45.30	mA	—
9 V V_{CC}	I_{CC2}	—	48.54	57.44	67.78	mA	—
DEF V_{CC}	I_{CC3}	—	19.70	23.31	27.50	mA	—

DC CHARACTERISTICS
Pin voltage

PIN	PIN NAME	SYM-BOL	MIN	TYP.	MAX	UNIT
1	VSM out	V_1	4.10	4.30	4.50	V
2	GND1	V_2	—	0.00	—	
3	R in	V_3	3.40	3.70	4.00	
4	G in	V_4	3.40	3.70	4.00	
5	B in	V_5	3.40	3.70	4.00	
6	Ys / Ym in	V_6	—	0.00	0.20	
7	OSD R in	V_7	5.00	5.50	6.00	
8	OSD G in	V_8	5.00	5.50	6.00	
9	OSD B in	V_9	5.00	5.50	6.00	
10	OSD Ys in	V_{10}	—	0.00	0.20	
11	ABL in	V_{11}	5.70	6.00	6.30	
12	VK out	V_{12}	4.85	5.00	—	
13	R out	V_{13}	1.20	1.60	2.00	
14	G out	V_{14}	1.20	1.60	2.00	
15	B out	V_{15}	1.20	1.60	2.00	
16	V_{CC} (9 V)	V_{16}	—	9.00	—	
17	R Filter	V_{17}	2.1	2.5	2.9	
18	G Filter	V_{18}	2.1	2.5	2.9	
19	B Filter	V_{19}	2.1	2.5	2.9	
20	IK in	V_{20}	0.95	1.00	1.05	
21	V Centering	V_{21}	2.20	2.30	2.40	
22	EW FB	V_{22}	3.90	4.30	4.70	
23	EW out	V_{23}	0.60	0.70	0.80	
24	V out	V_{24}	0.60	0.70	0.80	
25	V NFB	V_{25}	4.60	5.00	5.40	
26	V AGC	V_{26}	1.80	2.00	2.20	
27	V RAMP	V_{27}	4.00	4.20	4.40	
28	EHT, V i n	V_{28}	4.80	4.90	5.00	

PIN	PIN NAME	SYM-BOL	MIN	TYP.	MAX	UNIT
29	SCL	V_{29}	4.90	5.00	—	V
30	SDA	V_{30}	4.90	5.00	—	
31	D. GND GND2	V_{31}	—	0.00	—	
32	HD out	V_{32}	0.15	0.20	0.25	
33	VD out	V_{33}	4.90	5.00	5.10	
34	FBP in	V_{34}	1.30	1.60	1.90	
35	H out	V_{35}	1.50	1.80	2.10	
36	Sync out	V_{36}	8.80	9.00	—	
37	DEF V_{CC}	V_{37}	—	9.00	—	
38	Sync in	V_{38}	2.80	3.00	3.20	
39	V Sep	V_{39}	6.00	6.40	6.80	
40	AFC1	V_{40}	7.20	7.50	7.80	
41	32 fh VCO	V_{41}	5.70	5.90	6.10	
42	Curve correction	V_{42}	4.60	4.80	5.00	
43	DL out	V_{43}	0.30	0.80	1.00	
44	GND3	V_{44}	—	0.00	—	
45	Chroma in	V_{45}	1.59	1.77	1.95	
46	APC	V_{46}	1.39	1.72	2.05	
47	B-Y out	V_{47}	1.91	2.22	2.53	
48	R-Y out	V_{48}	1.91	2.22	2.53	
49	X'tal	V_{49}	3.80	4.00	4.20	
50	CW out	V_{50}	3.00	3.50	4.00	
51	V_{CC} (5 V)	V_{51}	—	5.00	—	
52	R-Y in	V_{52}	2.85	3.00	3.15	
53	B-Y in	V_{53}	2.85	3.00	3.15	
54	Y in	V_{54}	3.50	3.65	3.90	
55	Black peak detect	V_{55}	3.20	3.70	3.80	
56	DC restoration correction	V_{56}	2.90	3.00	3.10	

AC CHARACTERISTICS
Video stage

CHARACTERISTICS	SYMBOL	TEST CIR-CUIT	TEST CONDITIONS	MIN	TYP.	MAX	UNIT
#54 Voltage (Y Input Pedestal Clamp Voltage)	V54	—	(Note P1)	3.5	3.65	3.9	V
#55 Voltage	V55	—	(Note P2)	3.2	3.7	3.8	V
#56 Voltage	V56	—	(Note P3)	2.93	3.03	3.13	V
#1 Voltage	V1	—	(Note P4)	4.1	4.25	4.4	V
Y Input Pedestal Clamp Error Voltage	ΔVPC0	—	(Note P5)	−7	±0	+7	mV
	ΔVPC1	—					
Y Input Pedestal Clamp Pulse Phase	TCL1	—	(Note P6)	2.8	2.9	3.0	μs
	TCL2	—		4.8	4.9	5.0	
Y Input Dynamic Range	DR54	—	(Note P7)	1.0	1.25	1.4	V_{p-p}
#56 Output Impedance	Z56	—	(Note P8)	4	5	6	kΩ
Black Stretching Amplifier Maximum Gain	GBS	—	(Note P9)	1.3	1.4	1.5	(Times)
Black Level Compensation	BLC	—	(Note P10)	6	7	8	(IRE)
Black Peak Detection Level	ΔVBP	—	(Note P11)	−15	0	+15	mV
Black Stretching Start Point	PB001	—	(Note P12)	34	36	42	(IRE)
	PB111	—		51	54	61	
DC Restoration Rate Compensation Amp. Gain	GDTC	—	(Note P13)	1.45	1.55	1.65	(Times)
	GDTR	—		1.3	1.4	1.5	
Self-Diagnosis Y IN	SCDC	—	(Note P14)	—	OK	—	—
	SCAC	—					
Y Mute	GYM	—	(Note P15)	−∞	−50	−45	dB
Sharpness Peak Frequency	FAP	—	(Note P16)	3.35	4.2	5.05	MHz
Sharpness Control Range	GMAX	—	(Note P17)	8	11	14	dB
	GMIN	—		−12	−7.5	−3	
Sharpness Control Center Characteristics	GCEN	—	(Note P18)	2	5	8	dB
Between Y IN and R OUT Delay Time	TY	—	(Note P19)	120	150	180	ns
VSM Peak Frequency	FVSM	—	(Note P20)	3	4	5	MHz
VSM Gain	GVSM0	—	(Note P21)	9	11	13	dB
	GVSM1	—		−∞	−30	−20	
VSM Muting Threshold Voltage	VVM10	—	(Note P22)	0.7	0.8	0.9	V
	VVM6	—		2.15	2.25	2.35	
VSM High Speed Muting Response Time	THM1	—	(Note P23)	0	+50	+100	ns
	THM2	—					
	THM3	—					
	THM4	—					
VSM Phase	TVM24	—	(Note P24)	64	80	94	ns
	TVMFP	—		59	73	87	
	TVM2T	—		64	80	94	

(Note 1) : For testing, see the picture sharpness test circuit diagrams.
(Note 2) : Ensure the composite signal is always input to pin 38 (SYNC IN).

Chroma stage

CHARACTERISTICS	SYMBOL	TEST CIR-CUIT	TEST CONDITIONS	MIN	TYP.	MAX	UNIT
ACC Characteristic	va10	—	(Note C1)	93.5	110	127	mV_{p-p}
	va30	—		272	320	368	
	va300	—		276	325	374	
	va600	—		276	325	374	
	A	—		0.80	1.00	1.10	—
Color Difference Output Level	vB	—	(Note C2)	276	325	374	mV_{p-p}
	vR	—		276	325	374	
Color Difference Output Relative Amplitude	vRB	—	(Note C3)	0.90	1.00	1.10	—
Color Difference Output Demodulation Angle	θBcnt	—	(Note C4)	3.0	6.0	11.0	°
	θRcnt	—		91.0	94.0	99.0	
Color Difference Output Relative Phase	θRB	—	(Note C5)	85.0	89.0	91.0	°
Color Difference Output Tint Adjustment Characteristics	θBmax	—	(Note C6)	−35.0	−40.0	−46.5	°
	θBmin	—		35.0	38.0	44.0	
	θRmax	—		−35.0	−40.0	−46.5	
	θRmin	—		35.0	38.0	46.0	
Supply Voltage Dependence of Color Difference Output	BVp	—	(Note C7)	5.00	8.00	11.00	%
	RVp	—		5.00	8.00	11.00	
	BVn	—		−11.00	−8.00	−5.00	
	RVn	—		−11.00	−8.00	−5.00	
Identification Sensitivity	vCB	—	(Note C8)	3.00	4.10	6.00	mV_{p-p}
	vBC	—		3.00	4.40	6.00	
Bus Read Identification	bCB	—	(Note C9)	—	0	—	—
	bBC	—		—	1	—	
Color Difference Output Voltage Difference in 1H Period	vBH	—	(Note C10)	—	0	4.00	mV_{p-p}
	vRH	—		—	0	4.00	
Color Difference Output Voltage Difference Every 1H Period	vBG	—	(Note C11)	—	0	2.00	mV_{p-p}
	vRG	—		—	0	2.00	
Color Difference Output DC Voltage	VB	—	(Note C12)	1.91	2.22	2.53	V
	VR	—		1.91	2.22	2.53	
Difference between DC Voltage Axes of Color Difference Output	VRB	—	(Note C13)	−0.1	0	+0.1	V
X'tal Free-Run Frequency	Xf	—	(Note C14)	3.579345	3.579545	3.579745	MHz
APC Frequency Control Sensitivity	βf	—	(Note C15)	0.45	0.90	1.20	$\frac{Hz}{mV}$
APC Pull-In / Hold Range	fh +	—	(Note C16)	+250	+500	+2000	Hz
	fh −	—		−250	−500	−2000	
	fp +	—		+250	+500	+2000	
	fp −	—		−250	−500	−2000	
Residual Carrier Level	vBNo	—	(Note C17)	—	2.0	4.00	mV_{p-p}
	vRNo	—		—	2.0	4.00	
Residual Higher Harmonics Level	vBHN	—	(Note C18)	—	2.0	4.0	mV_{p-p}
	vRHN	—		—	2.0	4.0	

CHARACTERISTICS	SYMBOL	TEST CIR-CUIT	TEST CONDITIONS	MIN	TYP.	MAX	UNIT
TOF-BPF Characteristic	GBL	—	(Note C19)	17.5	21.0	24.5	dB
	GBH	—		21.5	25.0	28.5	
	GTL	—		14.0	17.5	21.0	
	GTH	—		21.5	25.0	28.5	
CW Output Amplitude	vCW	—	(Note C20)	420	700	980	mV_{p-p}

Color difference stage

CHARACTERISTICS	SYMBOL	TEST CIR-CUIT	TEST CONDITIONS	MIN	TYP.	MAX	UNIT
Color Difference Input Clamp Voltage	VRY	—	(Note A1)	2.85	3.00	3.15	V
	VBY	—		2.85	3.00	3.15	
Color Difference Input / Output Delay Time	DLRY	—	(Note A2)	115	150	185	ns
	DLBY	—		115	150	185	
Unicolor Adjustment Characteristics	uR	—	(Note A3)	− 17	− 19	− 21	dB
	uB	—		− 17	− 19	− 21	
Color Adjustment Characteristics	cRmax	—	(Note A4)	6.5	8.0	9.5	dB
	cRmin	—		—	—	− 20	
	cBmax	—		6.5	8.0	9.5	
	cBmin	—		—	—	− 20	
RGB Output Half-Tone Characteristics	vRHo	—	(Note A5)	− 5.5	− 6	− 6.5	dB
	vGHo	—		− 5.5	− 6	− 6.5	
	vBHo	—		− 5.5	− 6	− 6.5	
RGB Output Amplitude	vRSTD	—	(Note A6)	0.64	1.13	0.87	V_{p-p}
	vGSTD	—		0.39	0.50	0.53	
	vBSTD	—		1.14	1.35	1.56	
	vRDVD	—		0.90	1.07	1.23	
	vGDVD	—		0.51	0.61	0.70	
	vBDVD	—		1.14	1.35	1.56	
	vRTSB	—		0.78	0.92	1.06	
	vGTSB	—		0.34	0.41	0.47	
	vBTSB	—		1.14	1.35	1.56	
	vRDTV	—		0.98	1.13	1.34	
	vGDTV	—		0.34	0.41	0.47	
	vBDTV	—		1.14	1.35	1.56	
RGB Output Relative Amplitude	vRBSTD	—	(Note A7)	0.78	0.87	0.96	—
	vGBSTD	—		0.31	0.35	0.39	
	vRBDVD	—		0.72	0.80	0.88	
	vGBDVD	—		0.37	0.42	0.47	
	vRBTSB	—		0.62	0.69	0.76	
	vGBTSB	—		0.25	0.28	0.31	
	vRBDTV	—		0.78	0.87	0.96	
	vGBDTV	—		0.24	0.27	0.30	

CHARACTERISTICS	SYMBOL	TEST CIR-CUIT	TEST CONDITIONS	MIN	TYP.	MAX	UNIT
RGB Output Demodulation Angle	θRSTD	—	(Note A8)	86.0	90	94	°
	θGSTD	—		232.0	236	240.0	
	θBSTD	—		−4	0	4	
	θRDVD	—		86.0	90	94.0	
	θGDVD	—		240	244	248	
	θBDVD	—		−4	0	4	
	θRTSB	—		88.0	92	96.0	
	θGTSB	—		236.0	240	244.0	
	θBTSB	—		−4	0	4	
	θRDTV	—		86.0	90	94.0	
	θGDTV	—		240.0	244	248.0	
	θBDTV	—		−4	0	4	
RGB Output Relative Phase	θRBSTD	—	(Note A9)	92	96	100	°
	θGBSTD	—		236	240	244	
	θRBDVD	—		88	92	96	
	θGBDVD	—		240	244	248	
	θRBTSB	—		90	94	98	
	θGBTSB	—		235	239	243	
	θRBDTV	—		103	107	111	
	θGBDTV	—		239	243	247	
Color Difference EXT → INT Crosstalk	XEIR	—	(Note A11)	—	−50	−45	dB
	XEIG	—		—	−50	−45	
	XEIB	—		—	−50	−45	
Color Difference INT → EXT Crosstalk	XIER	—	(Note A12)	—	−50	−45	dB
	XIEG	—		—	−50	−45	
	XIEB	—		—	−50	−45	
Color γ Characteristic	Cγ sp	—	(Note A13)	1.80	2.07	2.20	V

Y stage

CHARACTERISTICS	SYMBOL	TEST CIR-CUIT	TEST CONDITIONS	MIN	TYP.	MAX	UNIT
Sync Input~DL Output AC Gain	Gyoff	—	(Note Y1)	−0.30	−0.20	0.01	dB
	Gyon	—		−0.45	−0.35	0.01	
Sync Input~DL Output Frequency Gain	Gfyoff	—	(Note Y2)	−0.20	0.00	0.20	dB
	Gfyon			−3.00	−1.60	0.20	
Sync Input~DL Output Dynamic Range	VDoff	—	(Note Y3)	1.30	1.60	—	V_{p-p}
	VDon			1.30	1.60	—	
Sync Input~DL Output Transfer Characteristics	TYDL	—	(Note Y4)	300	350	410	ns

Text stage

CHARACTERISTICS	SYMBOL	TEST CIR-CUIT	TEST CONDITIONS	MIN	TYP.	MAX	UNIT
AC Gain	GR	—	(Note T1)	3.2	3.80	4.55	Times
	GG	—		3.2	3.80	4.55	
	GB	—		3.2	3.80	4.55	
Frequency Characteristics	GfR	—	(Note T2)	—	−3.0	−6.0	dB
	GfG	—		—	−3.0	−6.0	
	GfB	—		—	−3.0	−6.0	
Unicolor Adjustment Characteristic	vuMAX	—	(Note T3)	0.59	0.74	0.88	V_{p-p}
	vuCNT	—		0.31	0.39	0.47	
	vuMIN	—		0.06	0.08	0.10	
	Δvu	—		17	18.5	20	dB
Brightness Adjustment Characteristic	VbrMAX	—	(Note T4)	4.3	4.6	4.9	V
	VbrCNT	—		3.3	3.6	3.9	
	VbrMIN	—		2.3	2.6	2.9	
Brightness Control Sensitivity	Gbr	—	(Note T5)	14.2	16.3	18.7	mV
White Peak Slice Level	VWPS	—	(Note T6)	2.600	2.825	3.100	V_{p-p}
Black Peak Slice Level	VBPSR	—	(Note T7)	1.95	2.15	2.35	V
	VBPSG	—					
	VBPSB	—					
DC Restoration	TDCR	—	(Note T8)	—	0.0	50	mV
	TDCG	—					
	TDCB	—					
RGB Output S / N	N13	—	(Note T9)	—	−50	−45	dB
	N14	—					
	N15	—					
RGB Output Emitter-Follower Drive Current	I#13	—	(Note T10)	1.1	1.5	1.9	mA
	I#14	—					
	I#15	—					
RGB Output Temperature Coefficient	Δt13	—	(Note T11)	−2.0	0.0	2.0	mV / °C
	Δt14	—					
	Δt15	—					
Half-Tone Characteristics	GHT	—	(Note T12)	0.45	0.5	0.55	Times
Half-Tone ON Voltage	VHT	—	(Note T13)	0.6	0.8	1.0	V
V-BLK Pulse Output Level	VVR	—	(Note T14)	0.5	1.0	1.5	V
	VVG	—					
	VVB	—					
H-BLK Pulse Output Level	VHR	—	(Note T15)	0.5	1.0	1.5	V
	VHG	—					
	VHB	—					
Blanking Pulse Delay Time	tdONR	—	(Note T16)	—	0.0	0.3	μs
	tdONG	—					
	tdONB	—					
	tdOFFR	—		—	0.0	0.3	
	tdOFFG	—					
	tdOFFB	—					

CHARACTERISTICS	SYMBOL	TEST CIR-CUIT	TEST CONDITIONS	MIN	TYP.	MAX	UNIT
Sub-Contrast Control Range	Δvsu +	—	(Note T17)	1.8	2.3	2.8	dB
	Δvsu –	—		– 3.0	– 3.5	– 4.0	
RGB Output Voltage	V#13	—	(Note T18)	2.35	2.6	2.85	V
	V#14	—					
	V#15	—					
Cut-Off Voltage Control Range	CUT + R	—	(Note T19)	0.45	0.5	0.55	V
	CUT + G	—					
	CUT + B	—					
	CUT – R	—		– 0.45	– 0.5	– 0.55	
	CUT – G	—					
	CUT – B	—					
Drive Adjustment Range	DRG +	—	(Note T20)	2.35	2.85	3.35	dB
	DRG –	—		– 4.25	– 5.0	– 5.75	
	DRB +	—		2.35	2.85	3.35	
	DRB –	—		– 4.25	– 5.0	– 5.75	
#11 Input Impedance	Zin11	—	(Note T21)	24	30	36	kΩ
ACL Characteristic	ACL1	—	(Note T22)	– 1.5	– 3.5	– 5.5	dB
	ACL2	—		– 12	– 15	– 18	
ABL Point	ABLP1	—	(Note T23)	0.04	– 0.01	– 0.06	V
	ABLP2	—		– 0.09	– 0.14	– 0.19	
	ABLP3	—		– 0.24	– 0.29	– 0.34	
	ABLP4	—		– 0.37	– 0.42	– 0.47	
ABL Gain	ABLG1	—	(Note T24)	– 0.119	– 0.095	– 0.072	V
	ABLG2	—		– 0.400	– 0.320	– 0.240	
	ABLG3	—		– 0.750	– 0.600	– 0.450	
	ABLG4	—		– 0.925	– 0.740	– 0.555	
BLK Off Mode	BLK	—	(Note T25)	—	Oper-ating	—	—
Analog RGB Gain	GTXR	—	(Note T26)	4.2	5.0	6.0	Times
	GTXG	—					
	GTXB	—					
Analog RGB Frequency Characteristics	GfTXR	—	(Note T27)	—	– 1.0	– 3.0	dB
	GfTXG	—					
	GfTXB	—					
Analog RGB Input Dynamic Lange	GR13	—	(Note T28)	0.47	0.55	—	V_{p-p}
	GR14	—					
	GR15	—					
Analog RGB White Peak Slice Level	VTXMAXR	—	(Note T29)	3.5	3.8	4.1	V_{p-p}
	VTXMAXG	—					
	VTXMAXB	—					
Analog RGB Black Peak Limiter Level	VTXMINR	—	(Note T30)	1.9	2.1	2.3	V
	VTXMING	—					
	VTXMINB	—					

CHARACTERISTICS	SYMBOL	TEST CIR-CUIT	TEST CONDITIONS	MIN	TYP.	MAX	UNIT
Analog RGB Contrast Adjustment Characteristics	vuTXR1	—	(Note T31)	0.85	1.0	1.2	V_{p-p}
	vuTXG1	—					
	vuTXB1	—					
	vuTXR2	—		0.50	0.59	0.71	
	vuTXG2	—					
	vuTXB2	—					
	vuTXR3	—		0.11	0.13	0.15	
	vuTXG3	—					
	vuTXB3	—					
	ΔvuTXR	—		17.0	18.5	20	dB
	ΔvuTXG	—					
	ΔvuTXB	—					
Analog RGB Brightness Adjustment Characteristics	VbrTX1R	—	(Note T32)	3.3	3.6	3.9	V
	VbrTX1G	—					
	VbrTX1B	—					
	VbrTX2R	—		2.8	3.1	3.4	
	VbrTX2G	—					
	VbrTX2B	—					
	VbrTX3R	—		2.2	2.5	2.8	
	VbrTX3G	—					
	VbrTX3B	—					
Analog RGB Mode On Voltage	VTXON	—	(Note T33)	2.0	2.25	2.5	V
Analog RGB Mode Transfer Characteristics	τRYSR	—	(Note T34)	—	25	100	ns
	τRYSG	—					
	τRYSB	—					
	tPRYSR	—		—	30	100	
	tPRYSG	—					
	tPRYSB	—					
	ΔtPRYS	—		—	0	20	
	τFYSR	—		—	10	100	
	τFYSG	—					
	τFYSB	—					
	tpFYSR	—		—	25	100	
	tpFYSG	—					
	tpFYSB	—					
	ΔtPFYS	—		—	0	20	
Crosstalk from Video to Analog RGB	Vv→aR	—	(Note T35)	—	−50	−45	dB
	Vv→aG	—					
	Vv→aB	—					
Crosstalk from Analog RGB to Video	Va→vR	—	(Note T36)	—	−55	−50	dB
	Va→vG	—					
	Va→vB	—					

CHARACTERISTICS	SYMBOL	TEST CIR-CUIT	TEST CONDITIONS	MIN	TYP.	MAX	UNIT
Analog OSD Gain	GOSDR	—	(Note T37)	1.8	2.0	2.2	(Times)
	GOSDG	—					
	GOSDB	—					
Analog OSD Frequency Characteristics	GfOSDR	—	(Note T38)	—	– 1.0	– 3.0	dB
	GfOSDG	—					
	GfOSDB	—					
Analog OSD Output Level	VOSD1R	—	(Note T39)	2.25	2.5	2.75	V
	VOSD1G	—					
	VOSD1B	—					
	VOSD2R	—		1.98	2.20	2.42	
	VOSD2G	—					
	VOSD2B	—					
	VOSD3R	—		5.0	5.5	6.0	
	VOSD3G	—					
	VOSD3B	—					
Analog OSD Mode On Voltage	VOSDON	—	(Note T40)	2.00	2.25	2.50	V
Analog OSD Mode Transfer Characteristic	τROSDYSR	—	(Note T41)	—	20	100	ns
	τROSDYSG	—					
	τROSDYSB	—					
	tPROSDYSR	—		—	30	100	
	tPROSDYSG	—					
	tPROSDYSB	—					
	ΔtPROSDYS	—		—	0	20	
	τFOSDYSR	—		—	15	100	
	τFOSDYSG	—					
	τFOSDYSB	—					
	tPFOSDYSR	—		—	30	100	
	tPFOSDYSG	—					
	tPFOSDYSB	—					
	ΔtPFOSDYS	—		—	0	20	
RGB Output Self-Diagnosis	SCRGB	—	(Note T42)	—	Oper-ating	—	—
ACB Input Pulse Phase, Amplitude	θACBR	—	(Note T43)	—	1	—	(H)
	θACBG	—		—	2	—	
	θACBB	—		—	3	—	
	VACBR	—		0.200	0.250	0.300	V_{p-p}
	VACBG	—		0.200	0.250	0.300	
	VACBB	—		0.200	0.250	0.300	

CHARACTERISTICS	SYMBOL	TEST CIR-CUIT	TEST CONDITIONS	MIN	TYP.	MAX	UNIT
ACB Clamp Current	I17a	—	(Note T44)	0.08	0.1	0.125	mA
	I17b	—		0.08	0.1	0.125	
	I17c	—		0.8	1.0	1.3	
	I17d	—		2.0	2.5	3.2	
	I18a	—		0.08	0.1	0.125	
	I18b	—		0.08	0.1	0.125	
	I18c	—		0.8	1.0	1.3	
	I18d	—		2.0	2.5	3.2	
	I19a	—		0.08	0.1	0.125	
	I19b	—		0.08	0.1	0.125	
	I19c	—		0.8	1.0	1.3	
	I19d	—		2.0	2.5	3.2	
IK Input Amplitude	IKR	—	(Note T45)	0.8	1.0	1.2	V_{p-p}
	IKG	—		0.8	1.0	1.2	
	IKB	—		0.8	1.0	1.2	
RGB γ Correction Characteristics	γ1R	—	(Note T46)	40	50	60	(IRE)
	γ2R	—		60	70	80	
	Δ1R	—		0.75	1.5	2.25	dB
	Δ2R	—		−0.75	0.0	0.75	
	Δ3R	—		−2.55	−3.3	−4.05	
	γ1G	—		40	50	60	(IRE)
	γ2G	—		60	70	80	
	Δ1G	—		0.75	1.5	2.25	dB
	Δ2G	—		−0.75	0.0	0.75	
	Δ3G	—		−2.55	−3.3	−4.05	
	γ1B	—		40	50	60	(IRE)
	γ2B	—		60	70	80	
	Δ1B	—		0.75	1.5	2.25	dB
	Δ2B	—		−0.75	0.0	0.75	
	Δ3B	—		−2.55	−3.3	−4.05	
VK Output Characteristic	VKA	—	(Note T47)	1.90	2.00	2.10	V_{p-p}
	VK1	—		25.0	35.00	45.0	
	VK2	—		60.0	70.00	80.0	(IRE)
ACB Protector Circuit Operation Check 1	ACBPR	—	(Note T48)	—	—	—	—
	ACBPG	—		—	—	—	—
ACB Protector Circuit Operation Check 2	ACBBRAR	—	(Note T49)	—	—	—	—
	ACBBRAG	—		—	—	—	—
ACB Protector Circuit Operation Check 3	ACBBRLO	—	(Note T50)	—	—	—	—

CHARACTERISTICS	SYMBOL	TEST CIR-CUIT	TEST CONDITIONS	MIN	TYP.	MAX	UNIT
Base Band TINT Adjustment Characteristics	ANG RMIN	—	(Note T51)	47.0	53.0	59.0	°
	ANG BMIN	—		47.0	53.0	59.0	
	ANG RMAX	—		– 51.0	– 45.0	– 39.0	
	ANG BMAX	—		– 51.0	– 45.0	– 39.0	
Base Band TINT Adjustment Position	BUS BO	—	(Note T52)	C2	C6	CA	HEX

Deflection stage

CHARACTERISTICS	SYMBOL	TEST CIR-CUIT	TEST CONDITIONS	MIN	TYP.	MAX	UNIT
Sync. Separation Input Sensitivity Current	I_{IN38}	—	(Note D1)	12	20	30	μA
V Separation Filter Pin Source Current	I_{OUT39}	—	(Note D2)	3.2	4.2	5.2	μA
V Separation Level	V_{SEP}	—	(Note D3)	5.0	5.5	6.0	V
H AFC Phase Detection Current Ratio	I_{DET}	—	(Note D4)	210	300	420	μA
	ΔI_{DET}	—		−5	0	+5	%
Phase Detection Stop Period	T_{CO40}	—	(Note D5)	—	262 ∫ 10	—	(H)
32* f_H VCO Oscillation Start Voltage	V_{VCO}	—	(Note D6)	3.7	4.0	4.3	V
Horizontal Output Start Voltage	V_{HON35}	—	(Note D7)	4.7	5.0	5.3	V
	$V_{BUS\ HON}$	—		—	1	—	—
	$V_{BUS\ HOFF}$	—		—	0	—	
Horizontal Output Pulse Duty	T_{H35}	—	(Note D8)	38.5	40.5	42.5	%
Phase Detection Stop Mode	f_{FR}	—	(Note D9)	15585	15734	15885	Hz
Horizontal Output Free-Run Frequency	f_{HO}	—	(Note D10)	15585	15734	15885	Hz
Horizontal Oscillation Frequency Range	f_{HMIN}	—	(Note D11)	14700	15000	15300	Hz
	f_{HMAX}	—		16500	16700	16900	
Horizontal Oscillation Control Sensitivity	β_H	—	(Note D12)	250	300	350	Hz / 0.1V
Horizontal Output Voltage	V_{H35}	—	(Note D13)	4.2	4.6	5.0	V
	V_{L35}	—		—	0.15	0.3	
Power Supply Voltage Dependence of Horizontal Oscillation Frequency	Δf_{HV}	—	(Note D14)	−20	0	+20	Hz / V
Temperature Dependence of Horizontal Oscillation Frequency	Δf_{HT}	—	(Note D15)	—	60	70	Hz
Horizontal Sync. Phase	S_{PH1}	—	(Note D16)	2.3	2.5	2.7	μs
	S_{PH2}	—		0.2	0.3	0.4	
Horizontal Picture Phase Adjustment Range	ΔH_{SFT}	—	(Note D17)	5.5	6.0	6.5	μs
Horizontal Blanking Pulse Threshold	V_{HBLK1}	—	(Note D18)	4.7	5.0	5.3	V
	V_{HBLK2}	—		0.8	1.1	1.4	
Curve Correction Characteristic	ΔH_{42}	—	(Note D19)	2.3	2.5	2.7	μs
H Cycle Black Peak Detection Disable Pulse	HBP_S	—	(Note D20)	7.5	8.0	8.5	μs
	HBP_W	—		13.0	13.5	14.0	
External Black Peak Detection Disable Pulse Threshold	BP_{V32}	—	(Note D21)	0.9	1.1	1.3	V

CHARACTERISTICS	SYMBOL	TEST CIR-CUIT	TEST CONDITIONS	MIN	TYP.	MAX	UNIT
Clamp Pulse Start Phase	CP_S	—	(Note D22)	2.8	3.0	3.2	μs
Clamp Pulse Width	CP_W	—	(Note D22)	5.6	5.8	6.0	μs
HD Output Start Phase	HD_S	—	(Note D23)	0.7	0.9	1.1	μs
HD Output Pulse Width	HD_W	—	(Note D23)	0.7	0.9	1.1	μs
HD Output Amplitude	V_{HD}	—	(Note D23)	4.7	5.0	5.3	V
Gate Pulse Start Phase	GP_S	—	(Note D24)	2.7	2.9	3.1	μs
Gate Pulse Width	GP_W	—	(Note D24)	1.8	2.0	2.2	μs
Gate Pulse V Mask Period	T_{CO34}	—	(Note D25)	—	261 ∫ 10	—	(H)
Sync. Out Low Level	V_{SY}	—	(Note D26)	0.0	0.3	0.5	V
Vertical Output Oscillation Start Voltage	V_{ON}	—	(Note D27)	4.1	4.4	4.7	V
Vertical Free-Run Frequency	f_{VO}	—	(Note D28)	—	53	—	Hz
Vertical Output Voltage	V_{VH}	—	(Note D29)	4.9	5.2	5.5	V
	V_{VL}	—		—	0	0.3	
Service Mode Switching	VD_{NO}	—	(Note D30)	3.1	3.4	3.7	V
Vertical Pull-In Range	f_{PL}	—	(Note D31)	—	225	—	(H)
	f_{PH}	—		—	297	—	
Vertical Frequency Forced 263H	f_{V1}	—	(Note D32)	—	263	—	(H)
Vertical Frequency Forced 262.5H	f_{V2}	—	(Note D32)	—	262.5	—	(H)
Vertical Blanking Off Mode	V_{OFF}	—	(Note D33)	—	Check	—	—
Vertical Output Pulse Width	T_D	—	(Note D34)	44	46	48	μs
	T_W	—		—	8	—	
RGB Output Vertical Blanking Pulse Start Phase	VR_{S1}	—	(Note D35)	44	46	48	μs
	VG_{S1}	—					
	VB_{S1}	—					
RGB Output Vertical Blanking Pulse Stop Phase	VR_{S2}	—	(Note D35)	—	22	—	(H)
	VG_{S2}	—		—	22	—	
	VB_{S2}	—		—	22	—	
V Cycle Black Peak Detection Disable Pulse (Normal)	VBP_{NORMAL}	—	(Note D36)	—	257 ∫ 28	—	(H)
V Cycle Black Peak Detection Disable Pulse (Zoom)	VBP_{ZOOM}	—	(Note D37)	—	229 ∫ 56	—	(H)

Deflection correction stage

CHARACTERISTICS	SYMBOL	TEST CIR-CUIT	TEST CONDITIONS	MIN	TYP.	MAX	UNIT
Vertical Ramp Amplitude	V_{P27}	—	(Note G1)	1.50	1.67	1.83	V_{p-p}
Vertical Amplification	G_V	—	(Note G2)	22	25	28	dB
Vertical Amp Maximum Output Voltage	V_{H24}	—	(Note G3)	2.5	3.0	3.5	V
Vertical Amp Minimum Output Voltage	V_{L24}	—	(Note G4)	—	0.0	0.3	V
Vertical Amp Maximum Output Current	I_{MAX1}	—	(Note G5)	11	14	17	mA
Vertical NF Sawtooth Wave Amplitude	V_{P25}	—	(Note G6)	1.50	1.67	1.83	V_{p-p}
Vertical Amplitude Range	V_{PH}	—	(Note G7)	±36	±40	±44	%
Vertical Linearity Correction Maximum Value	V_{ℓ}	—	(Note G8)	±12	±15	±18	%
Vertical S Correction Maximum Value	V_S	—	(Note G9)	20	25	30	%
Vertical NF Center Voltage	V_C	—	(Note G10)	4.8	5.0	5.2	V
Vertical NF DC Change	V_{DC}	—	(Note G11)	±100	±120	±140	mV
Vertical Amplitude EHT Correction	V_{EHT}	—	(Note G12)	8	9	10	%
E-W NF Maximum DC Value (Picture Width)	V_{H22}	—	(Note G13)	5.3	5.8	6.3	V
E-W NF Minimum DC Value (Picture Width)	V_{L22}	—	(Note G14)	1.75	1.90	2.05	V
E-W NF Parabola Maximum Value (Parabola)	V_{PB}	—	(Note G15)	2.1	2.5	2.9	V_{p-p}
E-W NF Corner Correction (Corner)	V_{CR}	—	(Note G16)	1.0	1.2	1.4	V_{p-p}
Parabola Symmetry Correction	V_{TR}	—	(Note G17)	±4.5	±5.5	±6.5	%
E-W Amp Maximum Output Current	I_{MAX2}	—	(Note G18)	0.14	0.20	0.28	mA
AGC Operating Current 1	V_{AGC0}	—	(Note G19)	470	590	710	μA
AGC Operating Current 2	V_{AGC1}	—	(Note G20)	100	130	160	μA
Vertical Guard Voltage	V_{VG}	—	(Note G21)	1.80	2.00	2.20	V
E/W Output Self-Diagnosis	$V_{BUS\ EWOFF}$	—	(Note G22)	—	0	—	—
	$V_{BUS\ EWON}$	—		—	1	—	
V-Out Output Self-Diagnosis	$V_{BUS\ VOFF}$	—	(Note G23)	—	0	—	—
	$V_{BUS\ VON}$	—		—	1	—	
Vertical Blanking Check	V_{BLK1} V_{BLK2}	—	(Note G24)	—	Check	—	—
V Centering DAC Output	V_{21L}	—	(Note G25)	0.20	0.25	0.30	V
	V_{21M}	—		2.20	2.30	2.35	
	V_{21H}	—		4.20	4.30	4.35	
V NFB Pin Input Current	I_{20}	—	(Note G26)	—	10	900	nA

TEST CONDITIONS
Video stage

NOTE	ITEM	(TEST CONDITIONS V_{CC} = 9 V / 5 V, Ta = 25 ± 3°C)			
		SW MODE			MEASUREMENT METHOD
		SW_{54}	SW_{55}	SW_{56}	
P_1	#54 Voltage (Y Input Pedestal Clamp Voltage)	C	OPEN	OPEN	① Set the bus control data to the preset value. ② Measure the #54 DC voltage V_{54}.
P_2	#55 Voltage	C	OPEN	OPEN	① Set the bus control data to the preset value. ② Measure the #55 DC voltage V_{55}.
P_3	#56 Voltage	C	OPEN	OPEN	① Set the bus control data to the preset value. ② Measure the #56 DC voltage V_{56}.
P_4	#1 Voltage	C	OPEN	ON	① Set the bus control data to the preset value. ② Measure the #1 DC voltage V_1.
P_5	Y Input Pedestal Clamp Error Voltage	C	OPEN	OPEN	① Set the bus control data to the preset value. ② Set SW_{54} to C (connect the Y input to AC-GND). ③ Measure #56 with an oscilloscope as shown in the diagram and calculate ΔVPC. ④ Calculate the voltage differences ΔVPC1 and ΔVPC0 when the Y mute is on (1) and off (0). 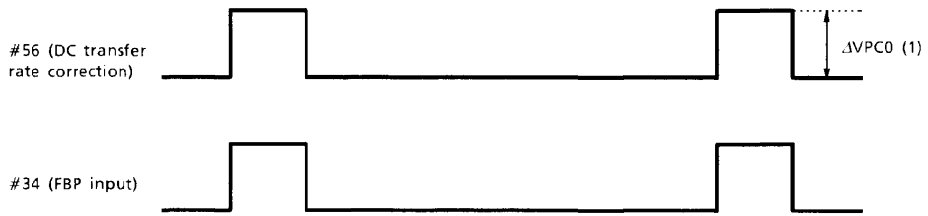

(Note 1) : When testing, see the picture sharpness test circuit diagram. First turn ACB mode off (bus control).
(Note 2) : Ensure the composite signal is always input to pin 38 (SYNC IN).

NOTE	ITEM	(TEST CONDITIONS V_{CC} = 9 V / 5 V, Ta = 25 ± 3°C)			
		SW MODE			MEASUREMENT METHOD
		SW_{54}	SW_{55}	SW_{56}	
P_6	Y Input Pedestal Clamp Pulse Phase	B	B	OPEN	① Set the bus control data to the preset value. ② Set SW_{54} to B (connect V_{CC} (5 V) to the Y input via a 20-kΩ resistor). ③ Measure #54 and #40 with an oscilloscope as shown in the diagram. Calculate TCL1 and TCL2. 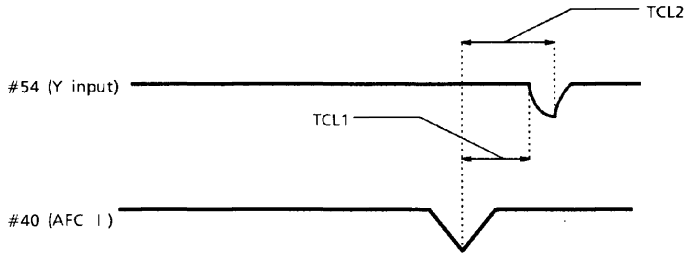
P_7	Y Input Dynamic Range	C	B	OPEN	① Set the bus control data to the preset value. ② Set SW_{54} to C (connect the Y input to AC-GND). ③ Set the unicolor to the center (100000), the brightness to the center (1000000), RGB cutoff to the center (10000000), the Y mute to OFF (0), and connect an external power supply to #54. ④ Increase the supply voltage from V_{54} and measure #13 (R_{OUT}). ⑤ When the #13 voltage stops changing, substitute the supply voltage (V) in the formula below and calculate DR_{54}. $DR_{54} = V - V_{54}$

(Note 1) : When testing, see the picture sharpness test circuit diagram. First turn ACB mode off (bus control).
(Note 2) : Ensure the composite signal is always input to pin 38 (SYNC IN).

NOTE	ITEM	(TEST CONDITIONS V_{CC} = 9 V / 5 V, Ta = 25 ± 3°C)			
		SW MODE			MEASUREMENT METHOD
		SW_{54}	SW_{55}	SW_{56}	
P_8	#56 Output Impedance	C	B	OPEN	① Set the bus control data to the preset value. ② Set SW_{54} to C (connect the Y input to AC-GND). ③ Connect the external power supply to #56 via ammeter A as shown in the diagram below. ④ Adjust the power supply until the ammeter reads 0 amperes. ⑤ Measure the ammeter current I56 when the power supply is increased by 0.1 V. ⑥ Calculate Z56 from the following formula. Z56 = 0.1 [V] ÷ I56 [A] 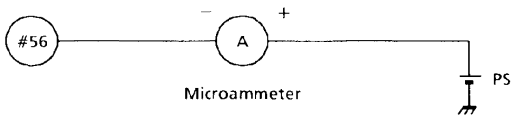
P_9	Black Stretching Amplifier Maximum Gain	A	B ↓ A	OPEN	① Set the bus control data to the preset value. ② Set the black stretch start point to 001, turn the Y mute off (0), set SW_{54} to A, and input a 500-kHz sine wave to TP54A. ③ Use #54 to adjust the signal amplitude to 0.1 $V_{p\text{-}p}$. ④ Set SW_{55} to B (minimum gain) and measure the amplitude V_A of #56. ⑤ Set SW_{55} to A (maximum gain) and measure the amplitude V_B of #56. ⑥ Calculate G_{BS} from the following formula. $G_{BS} = V_B \div V_A$

(Note 1) : When testing, see the picture sharpness test circuit diagram. First turn ACB mode off (bus control).
(Note 2) : Ensure the composite signal is always input to pin 38 (SYNC IN).

NOTE	ITEM	(TEST CONDITIONS V_{CC} = 9 V / 5 V, Ta = 25 ± 3°C)			
		SW MODE			MEASUREMENT METHOD
		SW_{54}	SW_{55}	SW_{56}	
P_{10}	Black Level Compensation	C	A	OPEN	① Set the bus control data to the preset value. ② Set SW_{54} to C (connect the Y input to AC-GND), set SW_{55} to A (maximum gain), turn the Y mute off (0), and turn the black level compensation on (set the black stretch start point to 000). ③ Observe #56, measure ΔV, and calculate the following formula. B_{LC} [(IRE)] = (ΔV [mV] ÷ (0.7 × 10^3) [mV]) × 100 [(IRE)] 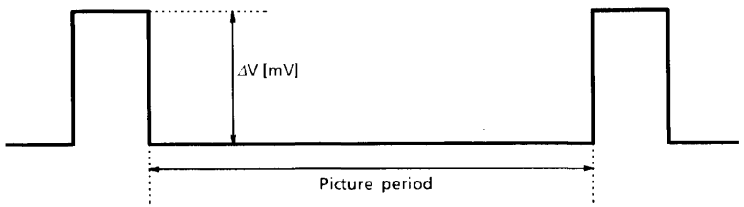
P_{11}	Black Peak Detection Level	C	C	OPEN	① Set the bus control data to the preset value. ② Turn the Y mute off (0) and connect #54 to an external power supply (PS). ③ Turn the black level correction on (set the black stretch start point to 000). ④ Increase the PS from 3V and measure the voltage VBP of #56 where the DC level of the picture period of #55 shifts from high to low. ⑤ Calculate ΔVBP from the following formula. ΔVBP = VBP − V_{56}

(Note 1) : When testing, see the picture sharpness test circuit diagram. First turn ACB mode off (bus control).
(Note 2) : Ensure the composite signal is always input to pin 38 (SYNC IN).

NOTE	ITEM	(TEST CONDITIONS V_{CC} = 9 V / 5 V, Ta = 25 ± 3°C)			
		SW MODE			MEASUREMENT METHOD
		SW_{54}	SW_{55}	SW_{56}	
P_{12}	Black Stretching Start Point	C	B ↓ A	OPEN	① Set the bus control data to the preset value. ② Set SW_{54} to C (connect the Y input to AC-GND), set SW_{55} to B (minimum gain), turn the Y mute off (0), and set the black stretch start point to 001. ③ Connect #54 to an external power supply (PS), increase the voltage from V_{54}, and plot the resulting change in voltage S_1 of #56. ④ Next, set SW_{55} to A (maximum gain). Then, increase the voltage from V_{54} as in ③ above and plot the resulting change in voltage S_2 of #56. ⑤ Now set the black stretch point to 111 and plot S_3 as in ③ above. ⑥ Use the diagram below to calculate the intersection V_{B001} of S_1 and S_2, and the intersection V_{B111} of S_1 and S_3. Use the following formals to calculate P_{B001} and P_{B111}, and calculate P_{B001} and P_{B111} from the formulas below. P_{B001} [(IRE)] = ((V_{B001} [V] − V_{56} [V] ÷ 0.7 [V]) × 100 [(IRE)] P_{B111} [(IRE)] = ((V_{B111} [V] − V_{56} [V] ÷ 0.7 [V]) × 100 [(IRE)] 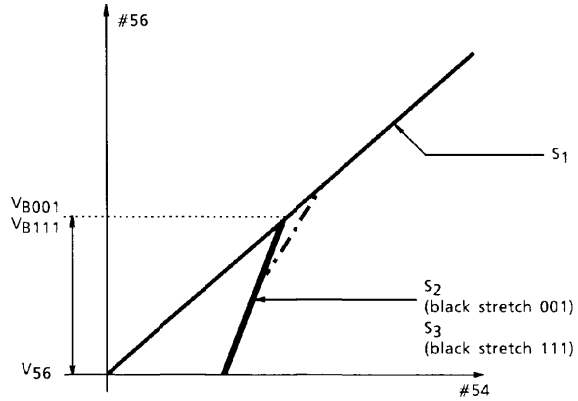

(Note 1) : When testing, see the picture sharpness test circuit diagram. First turn ACB mode off (bus control).
(Note 2) : Ensure the composite signal is always input to pin 38 (SYNC IN).

NOTE	ITEM	(TEST CONDITIONS V_{CC} = 9 V / 5 V, Ta = 25 ± 3°C)			
		SW MODE			MEASUREMENT METHOD
		SW_{54}	SW_{55}	SW_{56}	
P_{13}	DC Restoration Rate Compensation Amp Gain	C	B	OPEN ↓ ON	① Set the bus control data to the preset value. ② Connect #54 to an external power supply (PS). ③ Turn the Y mute off (0), set the unicolor to the center (100000), set the brightness to the center (1000000), set RGB cutoff to the center (10000000), and observe #13 (R_{OUT}). ④ Use unicolor to adjust the difference in the #13 picture period DC level to 0.7 V when the power supply is set to V_{54} and V_{54} + 0.7 V. ⑤ Applying V_{54} + 0.7 V to #54 as shown in the diagram below, calculate ΔV_1 of #13, then calculate ΔV_2 of #13 when SW_{56} is on. ⑥ Connect a 2-kΩ resistor between #56 and C56 (1 μF) and calculate ΔV_3 of #13. ⑦ Calculate GDTC and GDTR from the following formula. $GDTC = ((\Delta V_2 [V] - \Delta V_1 [V]) + 0.7 [V]) \div 0.7 [V]$ $GDTR = ((\Delta V_3 [V] - \Delta V_1 [V]) + 0.7 [V]) \div 0.7 [V]$ 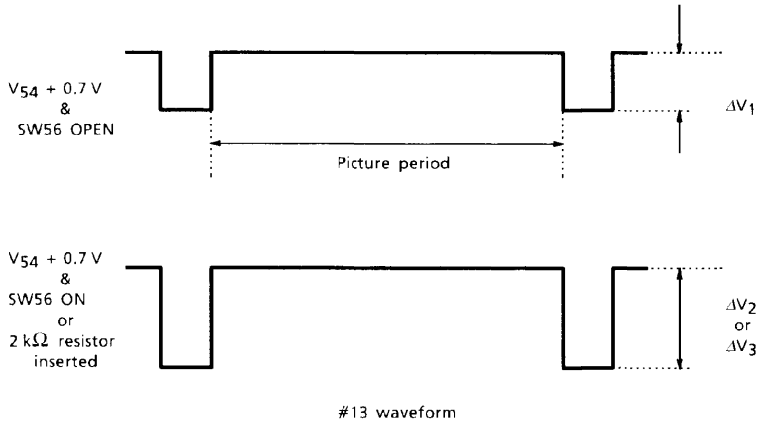

(Note 1) : When testing, see the picture sharpness test circuit diagram. First turn ACB mode off (bus control).
(Note 2) : Ensure the composite signal is always input to pin 38 (SYNC IN).

NOTE	ITEM	(TEST CONDITIONS V_{CC} = 9 V / 5 V, Ta = 25 ± 3°C)			
		SW MODE			MEASUREMENT METHOD
		SW_{54}	SW_{55}	SW_{56}	
P_{14}	Self-Diagnosis Y-IN	C ↓ A	B	OPEN	① Set the bus control data to the preset value. ② Set SW_{54} to C (connect the Y input to AC-GND), connect #54 to an external power supply (PS), and turn read mode on. ③ When the power supply is increased from V_{54} to V_{54} + 0.7 V, check that in read mode Y-IN changes from error to OK to error. SCDC ④ Next, set SW_{54} to A and input a sine wave from TG-7 to TP54. Apply a signal on #54 as shown in the diagram. Check that there is no problem with the Y IN in read mode. SCAC 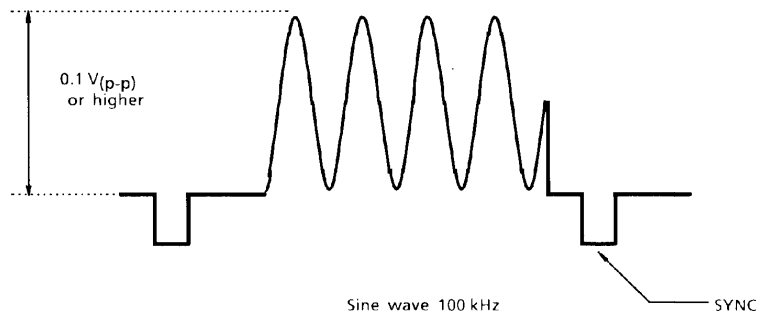
P_{15}	Y Mute	A	B	OPEN	① Set the bus control data to the preset value. ② Input a 100-kHz sine wave to TP54 and adjust #54 to 0.7 V_{p-p}. ③ Turn the Y mute on (1) and measure the #56 amplitude VYM1. ④ Turn the Y mute off (0) and measure the #56 amplitude VYM0. ⑤ Calculate the following formula. G_{YM} [dB] = 20 × ℓog (VYM1 / VYM0)

(Note 1) : When testing, see the picture sharpness test circuit diagram. First turn ACB mode off (bus control).
(Note 2) : Ensure the composite signal is always input to pin 38 (SYNC IN).

NOTE	ITEM	(TEST CONDITIONS V_{CC} = 9 V / 5 V, Ta = 25 ± 3°C)			
		SW MODE			MEASUREMENT METHOD
		SW_{54}	SW_{55}	SW_{56}	
P_{16}	Sharpness Peak Frequency	A	B	OPEN	① Set the bus control data to the preset value. ② Set SW_{54} to A and input a sweep signal to TP54. ③ Set the amplitude of #54 to 20 mV_{p-p}. ④ Set the unicolor to the maximum (111111), set the brightness to the center (1000000), set the RGB cutoff to the center (10000000), turn the Y mute off (0), turn test mode on (0), and set the picture sharpness to the maximum (111111). ⑤ Connect an emitter-follower to TP13 (R OUT) and use a spectrum analyzer to observe TP13 (R OUT). ⑥ Seek the peak point frequency F_{AP} as shown in the diagram. 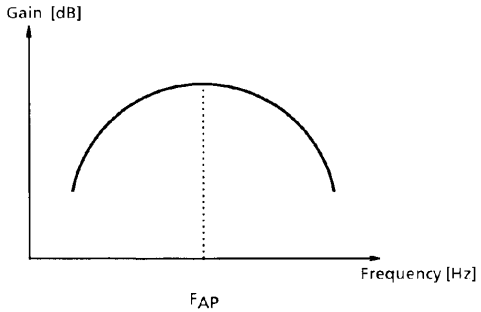

(Note 1) : When testing, see the picture sharpness test circuit diagram. First turn ACB mode off (bus control).
(Note 2) : Ensure the composite signal is always input to pin 38 (SYNC IN).

NOTE	ITEM	(TEST CONDITIONS V_{CC} = 9 V / 5 V, Ta = 25 ± 3°C)			
		SW MODE			MEASUREMENT METHOD
		SW_{54}	SW_{55}	SW_{56}	
P_{17}	Sharpness Control Range	A	B	OPEN	① Set the bus control data to the preset value. ② Set SW_{54} to A and input a sine wave to TP54A. ③ Set the amplitude of #54 to 20 mV_{p-p}. ④ Set the unicolor to the maximum (111111), the brightness to the center (1000000), RGB cutoff to the center (10000000), and turn the Y mute off (0). ⑤ Set the picture sharpness to the maximum (111111). Connect an emitter-follower to TP13 (R OUT). When the frequencies are 100 kHz and 2.4 MHz, measure the respective V_{100} and V_{24} amplitudes. ⑥ Next, set the picture sharpness to the minimum (000000). As in ⑤, when the frequencies are 100 kHz and 2.4 MHz, measure the V_{100} and V_{24} amplitudes respectively. ⑦ Calculate G_{MAX} and G_{MIN} from the following formula. G_{MAX}, G_{MIN} [dB] = $20 \times \ell og (V_{24} \div V_{100})$
P_{18}	Sharpness Control Center Characteristics	A	B	OPEN	① Repeat steps ① to ④ of P_{17}. ② Set the picture sharpness to the center (100000) ③ Connect an emitter-follower to TP13 (R OUT). When the frequencies are 100 kHz and 2.4 MHz, measure the V_{100} and V_{24} amplitudes respectively. ④ Calculate G_{CEN} from the following formula. G_{CEN} [dB] = $20 \times \ell og (V_{24} \div V_{100})$

(Note 1) : When testing, see the picture sharpness test circuit diagram. First turn ACB mode off (bus control).
(Note 2) : Ensure the composite signal is always input to pin 38 (SYNC IN).

NOTE	ITEM	(TEST CONDITIONS V_{CC} = 9 V / 5 V, Ta = 25 ± 3°C)			
		SW MODE			MEASUREMENT METHOD
		SW_{54}	SW_{55}	SW_{56}	
P19	Between Y IN and R OUT Delay Time	A	B	OPEN	① Set the bus control data to the preset value. ② Set SW_{54} to A and input a 2T pulse (STD) signal from TG-7 to TP54A. ③ Set the unicolor to the maximum (111111), the brightness to the center (1000000), the RGB cutoff to the center (10000000), turn the Y mute off (0), and set the picture sharpness to the center (100000). ④ Connect an emitter-follower to TP13 (R OUT) to observe TP13 (R OUT). ⑤ Calculate T_Y from the following diagram. 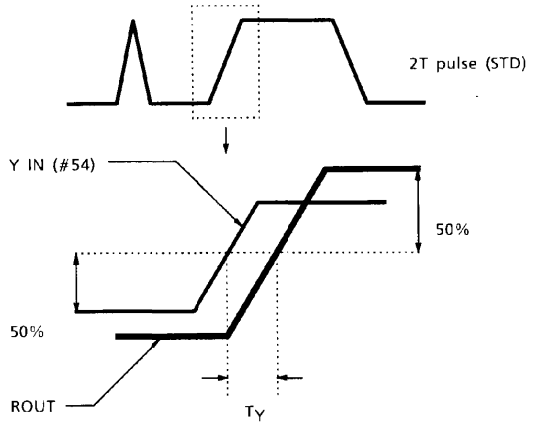

(Note 1) : When testing, see the picture sharpness test circuit diagram. First turn ACB mode off (bus control).
(Note 2) : Ensure the composite signal is always input to pin 38 (SYNC IN).

NOTE	ITEM	(TEST CONDITIONS V_{CC} = 9 V / 5 V, Ta = 25 ± 3°C)			
		SW MODE			MEASUREMENT METHOD
		SW_{54}	SW_{55}	SW_{56}	
P_{20}	VSM Peak Frequency	A	B	OPEN	① Set the bus control data to the preset value. ② Set SW_{54} to A, turn the Y mute off, and input a sweep signal to TP54. ③ Set the #54 amplitude to 100 mV_{p-p}. ④ Observe TP1 (VSMOUT) with a spectrum analyzer and seek the peak point frequency FVSM.
P_{21}	VSM Gain	A	B	OPEN	① Set the bus control data to the preset value. ② Set SW_{54} to A, turn the Y mute off (0), and input the FVSM sine wave (see P_{20} above) to TP54. ③ Set the amplitude of #54 to 100 mV_{p-p}. ④ When the VSM gain is on (0), measure the TP1 (VSMOUT) amplitude V_{VSM0} (V_{p-p}). ⑤ Next, measure the TP1 (VSMOUT) amplitude V_{VSM1} (V_{p-p}) when the VSM gain is off (1). ⑥ Calculate G_{VSM0} and G_{VSM1} by the following formulas. G_{VSM0} [dB] = 20 × ℓog (V_{VSM0} ÷ 0.1) G_{VSM1} [dB] = 20 × ℓog (V_{VSM1} ÷ 0.1)
P_{22}	VSM Muting Threshold Voltage	A	B	OPEN	① Repeat steps ① to ③ of P_{21}. ② Connect the external power supply (PS) to #10 and increase the voltage from 0.5 V. Read the PS voltage V_{VM10} when the TP1 (VSMOUT) amplitude disappears, as shown in the following diagram. ③ Set SW_6 to open, connect #6 to an external power supply, increase the voltage from 1.5 V. When the TP1 (VSMOUT) amplitude disappears as shown in the following diagram, read the PS voltage V_{VM6}. 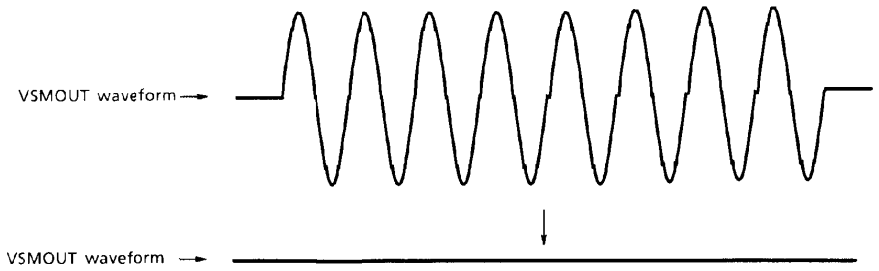

(Note 1) : When testing, see the picture sharpness test circuit diagram. First turn ACB mode off (bus control).
(Note 2) : Ensure the composite signal is always input to pin 38 (SYNC IN).

NOTE	ITEM	(TEST CONDITIONS V_{CC} = 9 V / 5 V, Ta = 25 ± 3°C)			
		SW MODE			MEASUREMENT METHOD
		SW_{54}	SW_{55}	SW_{56}	
P_{23}	VSM High Speed Muting Response Time	A	B	OPEN	① Repeat steps ① to ③ of P_{21} above. ② Set SW_6 to open, input a pulse as shown below to #6 (Ys / Ym IN), and measure the response times T_{HM1} and T_{HM2} at that input. ③ Similarly, input the pulse to #10 (OSD Ys IN) and measure the response times T_{HM3} and T_{HM4} at that input. 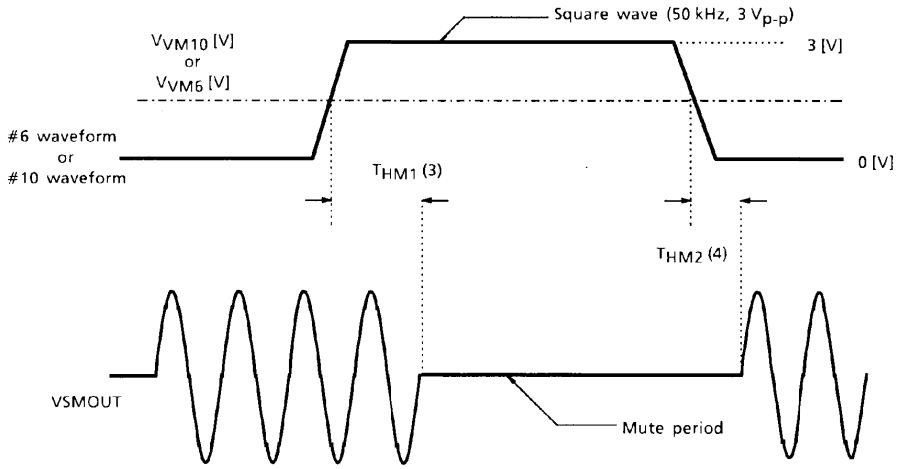

(Note 1) : When testing, see the picture sharpness test circuit diagram. First turn ACB mode off (bus control).
(Note 2) : Ensure the composite signal is always input to pin 38 (SYNC IN).

NOTE	ITEM	(TEST CONDITIONS V_{CC} = 9 V / 5 V, Ta = 25 ± 3°C)			
		SW MODE			MEASUREMENT METHOD
		SW_{54}	SW_{55}	SW_{56}	
P_{24}	VSM Phase	A	B	OPEN	① Set the bus control data to the preset value. ② Input a signal like that shown in the diagram below to TP54, turn the Y mute off (0), and adjust the amplitude of #54 to 0.7 $V_{p\text{-}p}$. ③ Set the unicolor to the maximum (111111), increase the picture sharpness from the minimum to a level where the R OUT waveform is not distorted. ④ Measure the phase differences T_{VM24}, T_{VMFP}, and T_{VM2T} between TP1 (VSMOUT) and TP13 (R OUT) when the signal is an FVSM sine wave, a 2T pulse, and a 2.4-MHz signal, as shown in the diagram below. (To make a waveform at TP1, reverse the waveform at TP13 using an oscilloscope.) 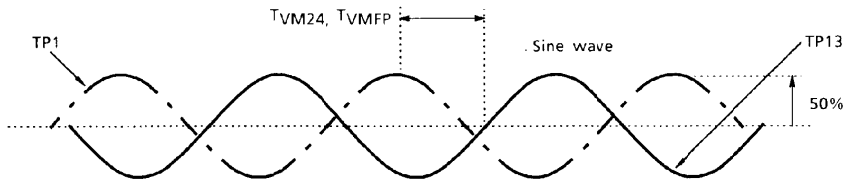 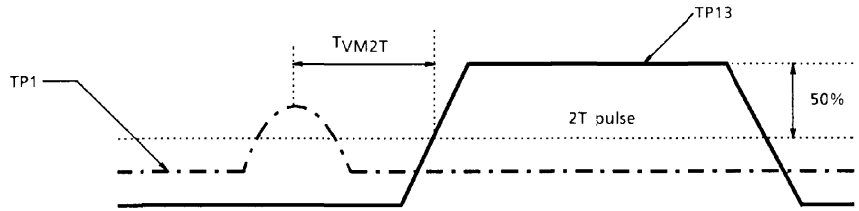

(Note 1) : When testing, see the picture sharpness test circuit diagram. First turn ACB mode off (bus control).
(Note 2) : Ensure the composite signal is always input to pin 38 (SYNC IN).

Chroma stage

NOTE	ITEM	SW MODE SW_{45}	SW MODE SW_{46}	(#16 V_{CC} = 9 V, #37 V_{CC} = 9 V, #51 V_{CC} = 5 V, Ta = 25 ± 3°C) MEASUREMENT METHOD
C_1	ACC Characteristics	B	ON	① Input a rainbow signal (signal C-1) to the chroma input pin (TP45). Burst : chroma = 1 : 1 ② When the chroma input amplitude levels are set to 10, 30, 300, and 600 mV_{p-p}, measure the output amplitudes va10, va30, va300, and va600 of the R-Y output pin (TP48). ③ Calculate A = va30 / va600.
C_2	Color Difference Output Level	B	ON	① Input a rainbow signal (signal C-1) to the chroma input pin (TP45). Burst : chroma = 300 mV_{p-p} : 300 mV_{p-p} ② Change the burst phase so that bar 2 of the B-Y output pin (TP47) output waveform is the bottom peak and bar 7 is the top peak. ③ Measure the amplitude (v_B) of the B-Y output pin (TP47). ④ Set the burst phase to 180°. ⑤ Measure the amplitude (v_R) of the R-Y output pin (TP48).
C_3	Color Difference Output Relative Amplitude	B	ON	① Calculate the relative amplitude v_{RB} from the following formula using the values obtained in steps ③ and ⑤ of C_{02} above. $v_{RB} = v_R / v_B$
C_4	Color Difference Output Demodulation Angle	B	ON	① Input a rainbow signal (C-1) to the chroma input pin (TP45). Burst : chroma = 200 mV_{p-p} : 200 mV_{p-p} ② Calculate the demodulation angles θB_{cnt} and θR_{cnt} of the B-Y output pin (TP47) and the R-Y output pin (TP48) using the formulas and diagram below. 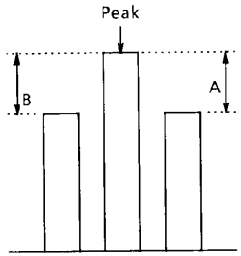 Demodulation waveform $\theta_{Bcnt} = 0° - \tan^{-1}\left(\frac{1}{\frac{2A}{B} + \sqrt{3}}\right) - 15°$ (Bar 6 is the peak at B-Y) $\theta_{Rcnt} = 90° - \tan^{-1}\left(\frac{1}{\frac{2A}{B} + \sqrt{3}}\right) - 15°$ (Bar 3 is the peak at R-Y)
C_5	Color Difference Output Relative Phase	B	ON	① Calculate the relative phase θ_{RB} from the following formula using the values obtained in C_{04} above. $\theta_{RB} = \theta_{Rcnt} - \theta_{Bcnt}$

(Note 1) : Where the bus data are not specified, set the preset values.
(Note 2) : Ensure the sync signal is always input to TP38 (SYNC IN).

NOTE	ITEM	SW MODE SW_{45}	SW MODE SW_{46}	MEASUREMENT METHOD ($\#16\ V_{CC}$ = 9 V, $\#37\ V_{CC}$ = 9 V, $\#51\ V_{CC}$ = 5 V, Ta = 25 ± 3°C)
C_6	Color Difference Output Tint Adjustment Characteristics	B	ON	① Input a rainbow signal (signal C-1) to the chroma input pin (TP45). Burst : chroma = 300 mV_{p-p} : 300 mV_{p-p} ② Measure the demodulation angles $\theta_{B'}$ and $\theta_{R'}$ in the outputs with the tint set to the maximum (subaddress (03H), data (FE)). Calculate θ_{Bmax} and θ_{Rmax} by the following formulas. $\theta_{Bmax} = \theta_{B'} - \theta_{Bcnt}$ $\theta_{Rmax} = \theta_{R'} - \theta_{Rcnt}$ ③ Measure the demodulation angles $\theta_{B''}$ and $\theta_{R''}$ in the outputs with the tint set to the minimum (subaddress (03H), data (00). Calculate θ_{Bmin} and θ_{Rmin} by the following formulas. $\theta_{Bmin} = \theta_{B''} - \theta_{Bcnt}$ $\theta_{Rmin} = \theta R'' - \theta_{Rcnt}$
C_7	Supply Voltage Dependence of Color Difference Output	B	ON	① Input a rainbow signal (signal C-1) to the chroma input pin (TP45). Burst : chroma = 300 mV_{p-p} : 300 mV_{p-p} ② As in C_{02}, measure the amplitudes ΔVBp and ΔVRp of the B-Y output pin (TP47) and R-Y output pin (TP48) when the 5-V V_{CC} is set to 5 V + 0.3 V. Calculate the amplitude ratios BVp and RVp when the 5-V V_{CC} is set to 5 V. $BVp = \frac{\Delta VBp - vB}{vB} \times 100 \qquad RVp = \frac{\Delta VRp - vR}{vR} \times 100$ ③ Using the same tests as above, calculate BVn and RVn when the 5-V V_{CC} is set to 5 V−0.3 V $BVn = \frac{\Delta VBn - vB}{vB} \times 100 \qquad RVn = \frac{\Delta VRn - vR}{vR} \times 100$
C_8	Identification Sensitivity	B	ON	① Input a rainbow signal (signal C-1) to the chroma input pin (TP45). Burst : chroma = 1 : 1 ② Gradually reduce the input signal amplitude from 100 mV_{p-p}. When the B-Y output pin (TP47) signal disappears (when the current is DC), measure the input signal amplitude v_{CB}. ③ Gradually increase the input signal amplitude from 0 mV_{p-p}. When a demodulation signal appears on the B-Y output pin (TP47), measure the input signal amplitude v_{BC}.
C_9	Bus Read Identification	B	ON	① Perform the same tests as above while observing the bus read : When the input signal amplitude is v_{CB}, check that the first bit is set to 0 (bCB). When the input signal amplitude is v_{BC}, check that the first bit is set to 1 (bBC).

(Note 1) : Where the bus data are not specified, set the preset values.
(Note 2) : Ensure the sync signal is always input to TP38 (SYNC IN).

NOTE	ITEM	(#16 V_{CC} = 9 V, #37 V_{CC} = 9 V, #51 V_{CC} = 5 V, Ta = 25 ± 3°C)		
		SW MODE		MEASUREMENT METHOD
		SW_{45}	SW_{46}	
C_{10}	Color Difference Output Voltage Difference in 1H Period	B	ON	① Input no more than 300-mV_{p-p} as a burst signal to chroma input pin (TP45). ② Measure the DC voltage difference (vBH) between the H blanking period and picture period of the B-Y output pin (TP47). ③ Measure the DC voltage difference (vRH) between the H blanking period and picture period of the R-Y output pin (TP48). 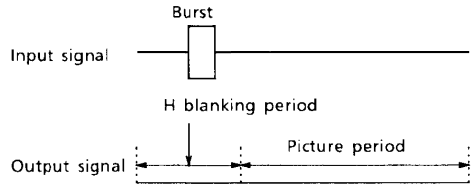
C_{11}	Color Difference Output Voltage Difference Every 1H Period	B	ON	① Input no more than 300-mV_{p-p} as a burst signal to chroma input pin (TP45). ② Measure the DC voltage difference (vBG) between the H picture period and H + 1 picture period of the B-Y output pin (TP47). ③ Measure the DC voltage difference (vRG) between the H picture period and H + 1 picture period of the R-Y output pin (TP48). 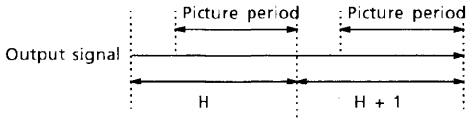
C_{12}	Color Difference Output DC Voltage	B	ON	① Input no more than 300-mV_{p-p} as a burst signal to chroma input pin (TP45). ② Measure the picture period DC voltage V_B of the B-Y output pin (TP47). ③ Measure the picture period DC voltage V_R of the R-Y output pin (TP48).
C_{13}	Difference between DC Voltage Axes of Color Difference Output	B	ON	① Use the following formula to calculate the difference (V_{RB}) between the voltage axes from the following formula using the values obtained in C_{12} above. $V_{RB} = V_R - V_B$
C_{14}	X'tal Free-Run Frequency	A	ON	① No signal input to the chroma input pin (TP45) (set SW_{45} to A). ② Observe the CW output pin (TP50) and measure the output frequency X_f.

(Note 1) : Where the bus data are not specified, set the preset values.
(Note 2) : Ensure the sync signal is always input to TP38 (SYNC IN).

NOTE	ITEM	SW MODE SW_{45}	SW MODE SW_{46}	(#16 V_{CC} = 9 V, #37 V_{CC} = 9 V, #51 V_{CC} = 5 V, Ta = 25 ± 3°C) MEASUREMENT METHOD
C_{15}	APC Frequency Control Sensitivity	A	OFF	① No signal input to the chroma input pin (TP45) (set SW_{45} to A). ② Set SW_{46} to open and connect an external power supply to the APC filter pin (#46). ③ Change the voltage of external power supply to a value regarded as Vc3, where the output frequency of the CW output pin (TP50) is 3.579545 MHz (X_f). ④ Measure the CW output frequencies X_f (+100) and X_f (−100) for Vc3 + ΔVc3 (±100 mV). Calculate the free-run sensitivity β_f from the following formula. 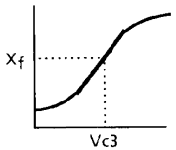 $\beta_f = \frac{X_f(+100) - X_f(-100)}{200}$
C_{16}	APC Pull-In / Hold Range	B	ON	① Input a 3.579545-MHz sine wave (300 mV_{p-p}) to the chroma input pin (TP45). ② Vary the input sine wave frequency in ±10-Hz steps from 3.579545 MHz. When the B-Y output pin (TP47) picture period amplitude changes, measure the difference between 3.579545 MHz and the varied sine wave frequencies : on the plus side, f_{h+}, and on the minus side, f_{h-}(hold). ③ Increase and decrease the above measured values by 1 kHz : (f_{h+}) +1 kHz and (f_{h-}) −1 kHz. Adjust to approximately 3.579545 MHz in ±10-Hz steps. When the B-Y output pin (TP47) picture period amplitude changes, measure the difference from 3.579545 MHz : on the plus side, f_{p+}, and on the minus side, f_{p-} (pull-in).
C_{17}	Residual Carrier Level	B	ON	① Input a rainbow signal (signal C-1) to the chroma input pin (TP45). Burst : chroma = 300 mV_{p-p} : 300 mV_{p-p} ② Measure the color subcarrier leak levels v_{BNo} and v_{RNo} of the B-Y output pin (TP47) and the R-Y output pin (TP48).
C_{18}	Residual Higher Harmonic Level	B	ON	① Input a rainbow signal (signal C-1) to the chroma input pin (TP45). Burst : chroma = 300 mV_{p-p} : 300 mV_{p-p} ② Measure the higher harmonic levels v_{BHN} and v_{RHN} of the B-Y output pin (TP47) and the R-Y output pin (TP48).

(Note 1) : Where the bus data are not specified, set the preset values.
(Note 2) : Ensure the sync signal is always input to TP38 (SYNC IN).

NOTE	ITEM	(#16 V_{CC} = 9 V, #37 V_{CC} = 9 V, #51 V_{CC} = 5 V, Ta = 25 ± 3°C)		
		SW MODE		MEASUREMENT METHOD
		SW_{45}	SW_{46}	
C_{19}	TOF-BPF Characteristics	B	ON	① Connect the V_{CC} (5 V) via a 750 Ω resistor to the R-Y output pin (TP48). ② Input a 3.579545-MHz sine wave (50 mV_{p-p}) to the chroma input pin (TP45). ③ Set to BPF mode (subaddress (03H), data (80)). ④ Set f_0 of the sine wave to (3.579545 M − 1 M) Hz, measure the output amplitude of TP48, and calculate the gain from the input (GB_L). ⑤ Set f_0 of the sine wave to (3.579545 M + 1 M) Hz, measure the output amplitude of TP48, and calculate the gain from the input (GB_H). ⑥ Set to TOF mode (subaddress (03H), data (81)). ⑦ Set f_0 of the sine wave to (3.579545 M − 1 M) Hz, measure the output amplitude of TP48, and calculate the gain from the input (GT_L). ⑧ Set f_0 of the sine wave to (3.579545 M + 1 M) Hz, measure the output amplitude of TP48, and calculate the gain from the input (GT_H).
C_{20}	CW Output Amplitude	B	ON	① Input a rainbow signal (signal C-1) to the chroma input pin (TP45). Burst : chroma = 300 mV_{p-p} : 300 mV_{p-p} ② Measure the amplitude vCW of the CW output pin.

(Note 1) : Where the bus data are not specified, set the preset value.
(Note 2) : Ensure the sync signal is always input to TP38 (SYNC IN).

Color difference stage

NOTE	ITEM	(#16 V_{CC} = 9 V, #37 V_{CC} = 9 V, #51 V_{CC} = 5 V, Ta = 25 ± 3°C)				
		SW MODE				MEASUREMENT METHOD
		SW_6	SW_{45}	SW_{52}	SW_{53}	
A_1	Color Difference Input Clamp Voltage	C	A	A	A	① Connect the color difference input pin to AC-GND. (Set SW_{52A} and SW_{53A} to A.) ② Measure the voltage V_{RY} of the R-Y input pin (#52) and the voltage V_{BY} of the B-Y input pin (#53).
A_2	Color Difference Input / Output Delay Time	C	A	B	B	① Set to external color difference input mode (subaddress (05H), data (81)). ② Now set as follows : Unicolor : maximum (subaddress (00H), data (3F)) Brightness : maximum (subaddress (01H), data (7F)) Color : center (subaddress (02H), data (40)). ③ Set SW_{52A} and SW_{53A} to B. Input signal C-2 to the R-Y input pin (TP52) and the B-Y input pin (TP53). f_0 = 100 kHz, picture period amplitude = 0.2 V_{p-p} ④ Measure the signal delay time (DLRY) from the R-Y input pin (TP52) to the R output (TP13). ⑤ Measure the signal delay time (DLBY) from the B-Y input pin (TP53) to the B output (TP15).
A_3	Unicolor Adjustment Characteristics	C	A	B	B	① Set to external color difference input mode (subaddress (05H), data (81)) ② Now set as follows : Brightness : maximum (subaddress (01H), data (7F)) Color : center (subaddress (02H), data (40)) Relative phase amplitude : standard (subaddress (12H), data (00)). ③ Set SW_{52A} and SW_{53A} to B. Input signal C-2 to the R-Y input pin (TP52) and the B-Y input pin (TP53). f_0 = 100 kHz, picture period amplitude = 0.2 V_{p-p} ④ Set unicolor to the maximum (subaddress (00H), data (3F)). Measure the RUmax, the amplitude of the R output (TP13), and BUmax, the amplitude of B output (TP15). ⑤ Set unicolor to the minimum (subaddress (00H), data (00)). Measure the RUmin, the amplitude of the R output (TP13), and BUmin, the amplitude of B output (TP15). ⑥ Calculate the unicolor adjustment characteristics uR and uB by the following formulas. $uR = 20\,\mathrm{Log}\frac{RU_{min}}{RU_{max}}$ $uB = 20\,\mathrm{Log}\frac{BU_{min}}{BU_{max}}$

(Note 1) : Where the bus data are not specified, set the preset value.
(Note 2) : Ensure the sync signal is always input to TP38 (SYNC IN).

NOTE	ITEM	(#16 V_{CC} = 9V, #37 V_{CC} = 9 V, #51 V_{CC} = 5 V, Ta = 25 ± 3°C)				
		SW MODE				MEASUREMENT METHOD
		SW_6	SW_{45}	SW_{52}	SW_{53}	
A_4	Color Adjustment Characteristics	C	A	B	B	① Set to external color difference input mode (subaddress (05H), data (81)) ② Now set as follows : Unicolor : maximum (subaddress (00H), data (3F)) Brightness : maximum (subaddress (01H), data (7F)) Relative phase amplitude : standard (subaddress (12H), data (00)). ③ Set SW_{52A} and SW_{53A} to B. Input signal C-2 to the R-Y input pin (TP52) and the B-Y input pin (TP53). f_0 = 100 kHz, picture period amplitude = 0.2 V_{p-p} ④ Set the color to the maximum (subaddress (02H), data (7F)). Measure RCmax, the amplitude of the R output (TP13), and BCmax, and the amplitude of the B output (TP15). ⑤ Set the color to the center (subaddress (02H), data (40)). Measure RCcnt, the amplitude of the R output (TP13), and BCcnt, the amplitude of the B output (TP15). ⑥ Set the color to the minimum (subaddress (02H), data (00)). Measure RCmin, the amplitude of the R output (TP13), and BCmin, the amplitude of the B output (TP15). ⑦ Calculate the color adjustment characteristics cR_{max}, cR_{min}, cB_{max}, and cB_{min} by the following formulas. $cR_{max} = 20 \text{ Log} \frac{RC_{MAX}}{RC_{CNT}}$ $cR_{min} = 20 \text{ Log} \frac{RC_{MIN}}{RC_{CNT}}$ $cB_{maX} = 20 \text{ Log} \frac{BC_{MAX}}{BC_{CNT}}$ $cB_{min} = 20 \text{ Log} \frac{BC_{MIN}}{BC_{CNT}}$

(Note 1) : Where the bus data are not specified, set the preset value.
(Note 2) : Ensure the sync signal is always input to TP38 (SYNC IN).

NOTE	ITEM	(#16 V_{CC} = 9 V, #37 V_{CC} = 9 V, #51 V_{CC} = 5 V, Ta = 25 ± 3°C)				
		SW MODE				MEASUREMENT METHOD
		SW_6	SW_{45}	SW_{52}	SW_{53}	
A_5	RGB Output Half-Tone Characteristics	C or B	B	A	A	① Input a rainbow signal (signal C-1) to the chroma input pin (TP45). Burst : chroma = 200 mV_{p-p} : 200 mV_{p-p} ② Now set as follows : Unicolor : maximum (subaddress (00H), data (3F)) Brightness : maximum (subaddress (01H), data (7F)) Color : center (subaddress (02H), data (40)) Relative phase amplitude : standard (subaddress (12H), data (00)). ③ Measure the amplitudes v_{Ro}, v_{Go}, and v_{Bo} of the R output pin (TP13), the G output pin (TP14), and the B output pin (TP15). ④ Set SW_6 to B and repeat the test in ③ above. Measure the amplitudes v_{RH}, v_{GH}, and v_{BH}. ⑤ Calculate the half-tone characteristics v_{RHo}, v_{GHo}, and v_{BHo} by the following formulas. $v_{RHo} = 20 \text{ Log} \frac{v_{RH}}{v_{Ro}}$ $v_{GHo} = 20 \text{ Log} \frac{v_{GH}}{v_{Go}}$ $v_{BHo} = 20 \text{ Log} \frac{v_{BH}}{v_{Bo}}$
A_6	RGB Output Amplitude	C	B	A	A	① Input a rainbow signal (signal C-1) to the chroma input pin (TP45). Burst : chroma = 200 mV_{p-p} : 200 mV_{p-p} ② Now set as follows : Unicolor : maximum (subaddress (00H), data (3F)) Brightness : maximum (subaddress (01H), data (7F)) Color : center (subaddress (02H), data (40)). ③ Switch the relative phase amplitude (subaddress (12H)) and measure the amplitudes (peak values) of the RGB outputs (TP13, TP14, TP15) according to the table below. Subaddress (12H) data / TP13 / TP14 / TP15 STD (00) / vRSTD / vGSTD / vBSTD DVD (40) / vRDVD / vGDVD / vBDVD TSB (80) / vRTSB / vGTSB / vBTSB DTV (C0) / vRDTV / vGDTV / vBDTV
A_7	RGB Output Relative Amplitude	C	B	A	A	① Using the values obtained in A_{06} above, calculate the relative amplitudes by the following formulas. $v_{RB***} = \frac{v_{R***}}{v_{B***}}$ $v_{GB} = \frac{v_{G***}}{v_{B***}}$

(Note 1) : Where the bus data are not specified, set the preset value.
(Note 2) : Ensure the sync signal is always input to TP38 (SYNC IN).

NOTE	ITEM	(#16 V_{CC} = 9 V, #37 V_{CC} = 9 V, #51 V_{CC} = 5 V, Ta = 25 ± 3°C)				
		SW MODE				MEASUREMENT METHOD
		SW_6	SW_{45}	SW_{52}	SW_{53}	
A_8	RGB Output Demodulation Angle	C	B	A	A	① Input a rainbow signal (signal C-1) to the chroma input pin (TP45). Burst : chroma = 200 mV_{p-p} : 200 mV_{p-p} ② Now set as follows : Unicolor : maximum (subaddress (00H), data (3F)) Brightness : maximum (subaddress (01H), data (7F)) Color : center (subaddress (02H), data (40)). Adjust the tint so that the waveform angle of the B-Y output pin (TP47) is 0°. ③ Switch the relative phase amplitude (subaddress (12H)) and measure the phase of the RGB outputs (TP13, TP14, TP15) according to the table below. Subaddress (12H) data / TP13 / TP14 / TP15 STD (00) / θRSTD / θGSTD / θBSTD DVD (40) / θRDVD / θGDVD / θBDVD TSB (80) / θRTSB / θGTSB / θBTSB DTV (C0) / θRDTV / θGDTV / θBDTV (*) The test method is the same as those for C_{04} in Chroma stage. (Measure bar 2 of the G axis.)
A_9	RGB Output Relative Phase	C	B	A	A	① Using the values obtained in A_{08} above, calculate the relative amplitudes by the following formulas. $\theta_{RB***} = \theta_{R***} - \theta_{B***}$ $\theta_{GB***} = \theta_{G***} - \theta_{B***}$

(Note 1) : Where the bus data are not specified, set the preset value.
(Note 2) : Ensure the sync signal is always input to TP38 (SYNC IN).

NOTE	ITEM	(#16 V_{CC} = 9 V, #37 V_{CC} = 9 V, #51 V_{CC} = 5 V, Ta = 25 ± 3°C)				
		SW MODE				MEASUREMENT METHOD
		SW_6	SW_{45}	SW_{52}	SW_{53}	
A_{11}	Color Difference EXT → INT Crosstalk	C	A	B	B	① No signal input to the chroma input pin (TP45) (set SW_{45} to A). ② Now set as follows : Unicolor : maximum (subaddress (00H), data (3F)) Brightness : maximum (subaddress (01H), data (7F)) Relative phase amplitude : standard (subaddress (12H), data (00)). ③ Set SW_{52A} and SW_{53A} to B. Input signal C-2 to the R-Y input pin (TP52) and the B-Y input pin (TP53). f_0 = 4 MHz, picture period amplitude = 0.2 V_{p-p} ④ Set to external color difference input mode (subaddress (05H), data (81)). ⑤ Adjust the color data so that the amplitude of the R output pin (TP13) is 2 V_{p-p}. ⑥ Set to internal color difference input mode (subaddress (05H), data (80)). ⑦ Measure the amplitude v_{XER} of the R output pin (TP13) and calculate the amount of crosstalk. $XEIR = 20 \text{ Log } \frac{v_{XER}}{2}$ ⑧ Repeat steps ④ to ⑦ above for the G and B axes and calculate the amount of crosstalk on those axes. $XEIG = 20 \text{ Log } \frac{v_{XEG}}{2}$ $XEIB = 20 \text{ Log } \frac{v_{XEB}}{2}$

(Note 1) : WWhere the bus data are not specified, set the preset value.
(Note 2) : WEnsure the sync signal is always input to TP38 (SYNC IN).

NOTE	ITEM	(#16 V_{CC} = 9 V, #37 V_{CC} = 9 V, #51 V_{CC} = 5 V, Ta = 25 ± 3°C)				
		SW MODE				MEASUREMENT METHOD
		SW_6	SW_{45}	SW_{52}	SW_{53}	
A_{12}	Color Difference INT→EXT Crosstalk	C	B	A	A	① Input a rainbow signal (signal C-1) to the chroma input pin (TP45). Burst : chroma = 200 mV_{p-p} : 200 mV_{p-p} ② Now set as follows : Unicolor : maximum (subaddress (00H), data (3F)) Brightness : maximum (subaddress (01H), data (7F)) Relative phase amplitude : standard (subaddress (12H), data (00)). ③ Set SW_{52A} and SW_{53A} to A. ④ Set to internal color difference input mode (subaddress (05H), data (80)). ⑤ Adjust the color data so that the amplitude of the R output pin (TP13) is 2 V_{p-p}. ⑥ Set to external color difference input mode (subaddress (05H), data (81)). ⑦ Measure the amplitude v_{XIR} of the R output pin (TP13) and calculate the amount of crosstalk. $XIER = 20 \text{ Log } \frac{v_{XIR}}{2}$ ⑧ Repeat steps ④ to ⑦ above for the G and B axes and calculate the amount of crosstalk on those axes. $XIEG = 20 \text{ Log } \frac{v_{XIG}}{2}$ $XIEB = 20 \text{ Log } \frac{v_{XIB}}{2}$

(Note 1) : Where the bus data are not specified, set the preset value.
(Note 2) : Ensure the sync signal is always input to TP38 (SYNC IN).

NOTE	ITEM	(#16 V_{CC} = 9 V, #37V_{CC} = 9 V, #51 V_{CC} = 5 V, Ta = 25 ± 3°C)				
		SW MODE				MEASUREMENT METHOD
		SW_6	SW_{45}	SW_{52}	SW_{53}	
A_{13}	Color γ Characteristics	C	B	A	A	① Set to external color difference input mode (subaddress (05H), data (81)). ② Now set as follows : Unicolor : maximum (subaddress (00H), data (3F)) Brightness : maximum (subaddress (01H), data (7F)) Relative phase amplitude : standard (subaddress (12H), data (00)) Y mute : on (set D_7 of subaddress (02H) to 1). ③ Set SW_{52a} to a, set SW_{53a} to b, and input the signal shown in Fig.① below to the B-Y input pin (TP53). ④ Set the color to the minimum and measure the picture period DC voltage $v_{B\gamma 0}$ of the B output pin (TP15). ⑤ Increase the color from the minimum. When the picture period DC voltage of the R output pin (TP13) changes, measure the picture period DC voltage $v_{B\gamma 1}$ of the B output pin (TP15). ⑥ Using the values obtained above, calculate the color γ start point $C_{\gamma sp}$ by the following formula. $C_{\gamma sp} = v_{B\gamma 1} - v_{B\gamma 0}$ 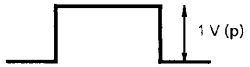 Fig.①

(Note 1) : Where the bus data are not specified, set the preset value.
(Note 2) : Ensure the sync signal is always input to TP38 (SYNC IN).

Y stage

NOTE	ITEM	SW MODE SW_{45}	MEASUREMENT METHOD (#16 V_{CC} = 9 V, #37 V_{CC} = 9 V, #51 V_{CC} = 5 V, Ta = 25 ± 3°C)
Y_1	Sync Input~DL Output AC Gain	A	① Input signal C-2 to the Sync Input pin (TP38). f_0 = 100 kHz, picture period amplitude = 0.2 V_{p-p} ② Turn DL mode off (subaddress (12), data (80)) and measure the picture period amplitude v_{43off} of the DL output (TP43). Calculate the gain from the input (GYoff) by the formula shown below. ③ Turn DL mode on (subaddress (12), data (A0)) and measure the picture period amplitude v_{43on} of the DL output (TP43). Calculate the gain from the input (GYon) by the formula shown below. $GYoff = 20 \text{ Log } \frac{v_{43off}}{0.2}$ $GYon = 20 \text{ Log } \frac{v_{43on}}{0.2}$
Y_2	Sync Input~DL Output Frequency Gain	A	① Input signal C-2 to the Sync Input pin (TP38). f_0 = 8 MHz, picture period amplitude = 0.2 V_{p-p} ② Turn DL mode off (subaddress (12), data (80)) and measure the picture period amplitude $v_{438Moff}$ of the DL output (TP43). Calculate the gain from the input (GfYoff) by the formula shown below. ③ Turn DL mode on (subaddress (12), data (A0)) and measure the picture period amplitude v_{438Mon} of the DL output (TP43). Calculate the gain from the input (GfYon) by the formula shown below. $GfYoff = 20 \text{ Log } \frac{v_{438Moff}}{v_{43off}}$ $GfYon = 20 \text{ Log } \frac{v_{438Mon}}{v_{43on}}$
Y_3	Sync Input~DL Output Dynamic Range	A	① Input signal C-3 to the Sync Input pin (TP38). ② When the amplitude A of signal C-3 is increased from 0, observe the change in the picture period amplitude of the DL output (TP43). With DL mode turned on and off, when the output amplitude stops changing in a linear direction, measure the input signal amplitude A.
Y_4	Sync Input~DL Output Transfer Characteristics	A	① Input signal C-2 to the Sync Input pin (TP38). f_0 = 100 kHz, picture period amplitude = 0.2 V_{p-p} ② Turn DL mode on (subaddress (12H), data (20)) and measure the amount of delay TYLD from the Sync Input (#38) to the DL output (TP43).

(Note 1) : Where the bus data are not specified, set the preset value.
(Note 2) : Ensure the sync signal is always input to TP38 (SYNC IN).

Text stage

NOTE	ITEM	(TEST CONDITIONS V_{CC} = 5 V and 9 V, Ta = 25 ± 3°C) SW MODE & SUB ADDRESS & DATA									MEASUREMENT METHOD
		S_{03}	S_{04}	S_{05}	S_{06}	S_{07}	S_{08}	S_{09}	S_{10}	S_{54}	
T_1	AC Gain	A	A	A	OFF	A	A	A	OFF	A	① Input signal 1 (f = 100 kHz, picture period amplitude = 0.2 V_{p-p}) to pin 54. ② Measure the picture period amplitudes of pins 13, 14, and 15. (v_{13}, v_{14}, v_{15}) ③ $G_R = v_{13} / 0.2$ $G_G = v_{14} / 0.2$ $G_B = v_{15} / 0.2$
T_2	Frequency Characteristics	A	A	A	OFF	A	A	A	OFF	A	① Input signal 1 (f = 8 MHz, picture period amplitude = 0.2 V_{p-p}) to pin 54. ② Measure the picture period amplitudes of pins 13, 14, and 15. (v_{13} 8 MHz, v_{14} 8 MHz, and v_{15} 8 MHz). ③ Using the values obtained in T_{01} above, calculate the frequency characteristics from the following formulas. ④ $G_{fR} = 20 \times \ell og (v_{13}\ 8\ MHz / v_{13})$ $G_{fG} = 20 \times \ell og (v_{14}\ 8\ MHz / v_{14})$ $G_{fB} = 20 \times \ell og (v_{15}\ 8\ MHz / v_{15})$
T_3	Unicolor Adjustment Characteristics	A	A	A	OFF	A	A	A	OFF	A	① Input signal 1 (f = 100 kHz, picture period amplitude = 0.2 V_{p-p}) to pin 54. ② When the subaddress (00, unicolor) data are changed to the maximum (3F), the center (20), and the minimum (00), measure the picture period amplitude of pin 13. (v_u^{MAX}, v_u^{CNT}, v_u^{MIN}) ③ Calculate the maximum, minimum amplitude ratio for unicolor in decibels. (Δv_u)
T_4	Brightness Adjustment Characteristics	A	A	A	OFF	A	A	A	OFF	A	① Input signal 2 to pin 54 and adjust the picture period amplitude input of pin 13 to 1 V_{p-p}. ② When the subaddress (01, brightness) data are changed to the maximum (FF), the center (C0), and the minimum (80), measure the picture period DC voltage of pin 13. (Vbr^{MAX}, Vbr^{CNT}, Vbr^{MIN})
T_5	Brightness Control Sensitivity	A	A	A	OFF	A	A	A	OFF	A	① Using the values obtained in T_{04} above, calculate the brightness sensitivity from the following formula. ② $Gbr = (Vbr^{MAX} - Vbr^{MIN}) / 128$

NOTE	ITEM	(TEST CONDITIONS V_{CC} = 5 V and 9 V, Ta = 25 ± 3°C) SW MODE & SUB ADDRESS & DATA									MEASUREMENT METHOD
		S_{03}	S_{04}	S_{05}	S_{06}	S_{07}	S_{08}	S_{09}	S_{10}	S_{54}	
T_6	White Peak Slice Level	A	A	A	OFF	A	A	A	OFF	A	① Change the bus data and set the sub-contrast to the maximum. ② Input signal 2 to pin 54 and gradually increase the amplitude. ③ When pin 13's picture period is clipped, measure the picture period amplitude of pin 13.
T_7	Black Peak Slice Level	A	A	A	OFF	A	A	A	OFF	C	① Apply an external power supply to pin 54 and gradually decrease the voltage from 3.7 V. ② When their picture periods are clipped, measure the picture period amplitudes of pins 13, 14, and 15.
T_8	DC Restoration	A	A	A	OFF	A	A	A	OFF	A	① Input the TG7 stair-step signal to pin 54. ② Adjust the unicolor data so that the pin 13 stair-step output signal is 1.25 V_{p-p}. ③ When the stair-step signal APL is changed from 10% to 90%, measure the voltage change at point A in the diagram below. ④ Repeat steps ① to ③ above on pins 14 and 15. 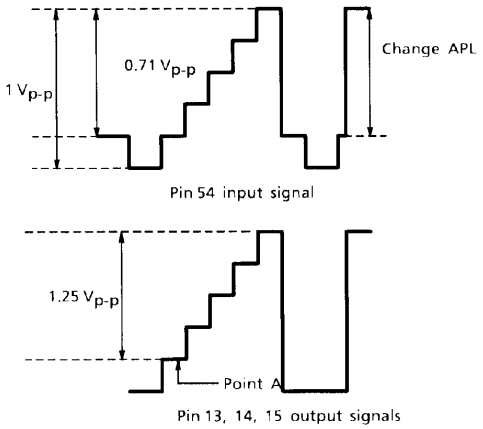

NOTE	ITEM	(TEST CONDITIONS V_{CC} = 5 V and 9 V, Ta = 25 ± 3°C) SW MODE & SUB ADDRESS & DATA									MEASUREMENT METHOD
		S_{03}	S_{04}	S_{05}	S_{06}	S_{07}	S_{08}	S_{09}	S_{10}	S_{54}	
T_9	RGB Output S / N	A	A	A	OFF	A	A	A	OFF	C	① Measure the picture period noise levels of pins 13, 14, and 15 with an oscilloscope. (n_{13}, n_{14}, n_{15} (V_{p-p})) ② Calculate the S / N for each pin. $N_{13} = -20 \times \mathrm{Log}\,(2.5 / (0.2 \times n_{13}))$ $N_{14} = -20 \times \mathrm{Log}\,(2.5 / (0.2 \times n_{14}))$ $N_{15} = -20 \times \mathrm{Log}\,(2.5 / (0.2 \times n_{15}))$
T_{10}	RGB Output Emitter-Follower Drive Current	A	A	A	OFF	A	A	A	OFF	C	① Connect a 3.5-V external power supply to pin 13 via a 100-Ω resistor (I#13) and measure the sink current on pin 13. ② Perform the same test on pins 14 and 15. (I#14, I#15)
T_{11}	RGB Output Temperature Coefficient	A	A	A	OFF	A	A	A	OFF	C	① When the temperature changes through the range −20°C to +65°C, measure the changes in the picture period amplitudes of pins 13, 14, and 15. ② Calculate the voltage changes per degree of temperature. (Δt13, Δt14, Δt15)
T_{12}	Half-Tone Characteristics	A	A	A	OFF	A	A	A	OFF	A	① Input signal 1 (f = 100 kHz, picture period amplitude = 0.2 V_{p-p}) to pin 54. ② Measure the picture period amplitude of pin 13. (v_{13A}) ③ Apply 1.5 V DC to pin 6. ④ Measure the picture period amplitude of pin 13. (v_{13B}) ⑤ $G_{HT} = v_{13B} / v_{13A}$
T_{13}	Half-Tone ON Voltage	A	A	A	OFF	A	A	A	OFF	A	① Input signal 1 (f = 100 kHz, picture period amplitude = 0.2 V_{p-p} to pin 54. ② Connect an external power supply to pin 6 and gradually increase the voltage from 0 V. ③ When the picture period amplitude of pin 13 changes, measure the pin 3 voltage. (V_{HT})
T_{14}	V-BLK Pulse Output Level	A	A	A	OFF	A	A	A	OFF	C	① Measure the voltages of pins 13, 14, and 15 during the vertical blanking period. (V_{VR}, V_{VG}, V_{VB})
T_{15}	H-BLK Pulse Output Level	A	A	A	OFF	A	A	A	OFF	C	① Measure the voltages of pins 13, 14, and 15 during the horizontal blanking period. (V_{HR}, V_{HG}, V_{HB})

NOTE	ITEM	(TEST CONDITIONS V_{CC} = 5 V and 9 V, Ta = 25 ± 3°C) SW MODE & SUB ADDRESS & DATA									MEASUREMENT METHOD
		S_{03}	S_{04}	S_{05}	S_{06}	S_{07}	S_{08}	S_{09}	S_{10}	S_{54}	
T_{16}	Blanking Pulse Delay Time	A	A	A	OFF	A	A	A	OFF	C	① Measure t_{dON} and t_{dOFF} using the signal input to pin 34 (FBN-IN) (A below) and the signals output from pins 13, 14, and 15 (B below). (A) Signal input to pin 34 (B) Signals output from pins 13, 14, and 15 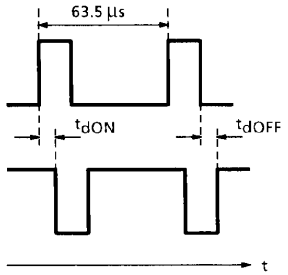
T_{17}	Sub-Contrast Control Range	A	A	A	OFF	A	A	A	OFF	A	① Input signal 1 (f = 100 kHz, picture period amplitude = 0.2 V_{p-p}) to pin 54. ② When the subaddress (0F, sub-contrast) data are changed to the maximum (8F), the center (88), and the minimum (80), measure the picture period amplitude of pin 13. ③ Calculate the maximum and minimum amplitude ratios in relation to the sub-contrast center in decibels. ($\Delta v_{su}+$, $\Delta v_{su}-$)
T_{18}	RGB Output Voltage	A	A	A	OFF	A	A	A	OFF	C	① Measure the picture period amplitudes of pins 13, 14, and 15.
T_{19}	Cut-Off Voltage Control Range	A	A	A	OFF	A	A	A	OFF	C	① When the R cutoff (subaddress (08)) data are changed to the maximum (FF), the center (80), and the minimum (00), measure the picture period amplitude of pin 13 and calculate the change in maximum and minimum from the center. (CUT+, CUT−) ② Make the following changes in steps (1) and (2) above and measure : Change the subaddress (09) data and measure pin 14. Change the subaddress (0A) data and measure pin 15.

NOTE	ITEM	(TEST CONDITIONS V_{CC} = 5 V and 9 V, Ta = 25 ± 3°C) SW MODE & SUB ADDRESS & DATA									MEASUREMENT METHOD
		S_{03}	S_{04}	S_{05}	S_{06}	S_{07}	S_{08}	S_{09}	S_{10}	S_{54}	
T_{20}	Drive Adjustment Range	A	A	A	OFF	A	A	A	OFF	A	① Input signal 1 (f = 100 kHz, picture period amplitude = 0.2 V_{p-p}) to pin 54. ② When the G drive subaddress (06) data are changed to the maximum (FE), the center (80), and the minimum (00), measure the picture period amplitude of pin 14. ③ Calculate the maximum and minimum amplitude ratios in relation to the drive center in decibels. (DRG+, DRG−) ④ Repeat steps ① to ③ above with the subaddress (07) data and pin 15 instead of 14. (DRB+, DRB−)
T_{21}	#11 Input Impedance	A	A	A	OFF	A	A	A	OFF	C	① Adjust the external power supply voltage until the ammeter reads 0. ② When the pin 11 voltage is increased by 0.2 V, measure the ammeter current. (i) Zin11 (Ω) = 0.2 (V) ÷ i (A) 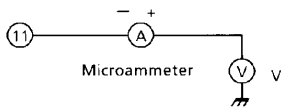
T_{22}	ACL Characteristics	A	A	A	OFF	A	A	A	OFF	A	① Input signal 1 (f = 100 kHz, picture period amplitude = 0.2 V_{p-p}) to pin 54. ② Measure the picture period amplitude of pin 13 (v_{ACL1}). ③ Apply −0.5 V DC to pin 11 from an external power supply and measure the picture period amplitude of pin 13. (v_{ACL2}) ④ Apply −1 V DC to pin 11 from an external power supply and measure the picture period amplitude of pin 13. (v_{ACL3}) ⑤ ACL1 = $-20 \times \ell og\,(v_{ACL2} / v_{ACL1})$ ACL2 = $-20 \times \ell og\,(v_{ACL3} / v_{ACL1})$

NOTE	ITEM	(TEST CONDITIONS V_{CC} = 5 V and 9 V, Ta = 25 ± 3°C) SW MODE & SUB ADDRESS & DATA									MEASUREMENT METHOD
		S_{03}	S_{04}	S_{05}	S_{06}	S_{07}	S_{08}	S_{09}	S_{10}	S_{54}	
T_{23}	ABL Point	A	A	A	OFF	A	A	A	OFF	C	① Measure the DC voltage of pin 11 (v_{ABL1}) ② Set the subaddress (04) data to (83). ③ Set the subaddress (00) data to (3F). Apply external voltage to pin 11, decrease the pin voltage from 6.5 V. When the voltage of pin 13 starts to change, measure the voltage of pin 11. (v_{ABL2}) ④ Change the subaddress (00) data to (7F), (BF), and (FF), and repeat step ③ for each of these data. (v_{ABL3}, v_{ABL4}, v_{ABL5}) ⑤ $ABL_{P1} = v_{ABL2} - v_{ABL1}$ $ABL_{P2} = v_{ABL3} - v_{ABL1}$ $ABL_{P3} = v_{ABL4} - v_{ABL1}$ $ABL_{P4} = v_{ABL5} - v_{ABL1}$
T_{24}	ABL Gain	A	A	A	OFF	A	A	A	OFF	C	① Apply 6.5 V from an external power supply to pin 11. ② Set the subaddress (00) data to (3F). ③ Set the brightness to the maximum. ④ Measure the voltage of pin 13 (v_{ABL6}) ⑤ Apply 5 V from the external power supply to pin 11. ⑥ Change the subaddress (04) data to (80), (81), (82), and (83), and repeat step 4 for each of these data. (v_{ABL7}, v_{ABL8}, v_{ABL9}, v_{ABL10}) ⑦ $ABL_{G1} = v_{ABL7} - v_{ABL6}$ $ABL_{G2} = v_{ABL8} - v_{ABL6}$ $ABL_{G3} = v_{ABL9} - v_{ABL6}$ $ABL_{G4} = v_{ABL10} - v_{ABL6}$
T_{25}	BLK Off Mode	A	A	A	OFF	A	A	A	OFF	C	① Set the subaddress (01) data to (40) and check that the blanking of pins 13, 14, and 15 is turned off.

NOTE	ITEM	(TEST CONDITIONS V_{CC} = 5 V and 9 V, Ta = 25 ± 3°C) SW MODE & SUB ADDRESS & DATA									MEASUREMENT METHOD
		S_{03}	S_{04}	S_{05}	S_{06}	S_{07}	S_{08}	S_{09}	S_{10}	S_{54}	
T_{26}	Analog RGB Gain	B	B	B	ON	A	A	A	OFF	C	① Input signal 1 (f = 100 kHz, picture period amplitude = 0.2 V_{p-p}) to pin 3. ② Measure the picture period amplitude of pin 13 (v_{13R}). ③ As in steps ① and ② above, input to pin 4 and measure pin 14 (v_{14G}), then input to pin 5 and measure pin 15 (v_{15B}). ④ $G_{TXR} = v_{13R} / 0.2$ $G_{TXG} = v_{14G} / 0.2$ $G_{TXB} = v_{15B} / 0.2$
T_{27}	Analog RGB Frequency Characteristics	B	B	B	ON	A	A	A	OFF	C	① Input signal 1 (f = 8 MHz, picture period amplitude = 0.2 V_{p-p}) to pin 3. ② Measure the picture period amplitude of pin 13. (v_{13R} 8 MHz) ③ As in steps ① and ② above, input to pin 4 and measure pin 14, then input to pin 5 and measure pin 15. (v_{14G} 8 MHz, v_{15B} 8 MHz) ④ Calculate the frequency characteristics from the above results and the results obtained in T_{26}. $Gf_{TXR} = 20 \times \ell og (v_{13R}\ 8\ MHz / v_{13R})$ $Gf_{TXG} = 20 \times \ell og (v_{14G}\ 8\ MHz / v_{14G})$ $Gf_{TXB} = 20 \times \ell og (v_{15B}\ 8\ MHz / v_{15B})$
T_{28}	Analog RGB Input D Range	B	B	B	ON	A	A	A	OFF	C	① Set the subaddress (00 : unicolor) data to min (00). ② Input signal 2 to pin 3 and gradually increase picture amplitude A. ③ When the voltage during the picture period of pin 13 stops changing, measure picture amplitude A (DR13). ④ Repeat steps (2) and (3) above under the following conditions : Input to pin 4, measure the voltage during the picture period of pin 14 (DR14). Input to pin 5, measure the voltage during the picture period of pin 15 (DR15).

NOTE	ITEM	(TEST CONDITIONS V_{CC} = 5 V and 9 V, Ta = 25 ± 3°C)									
		SW MODE & SUB ADDRESS & DATA									MEASUREMENT METHOD
		S_{03}	S_{04}	S_{05}	S_{06}	S_{07}	S_{08}	S_{09}	S_{10}	S_{54}	
T_{29}	Analog RGB White Peak Slice Level	B	B	B	ON	A	A	A	OFF	C	① Input signal 2 to pin 3. Gradually increase the picture period amplitude A. ② When pin 13 is clipped, measure the picture period amplitude of pin 13. ③ As in steps ① and ② above, input to pin 4 and measure pin 14, then input to pin 5 and measure pin 15.
T_{30}	Analog RGB Black Peak Limiter Level	A	A	A	ON	A	A	A	OFF	C	① Apply an external power supply to pin 3. Gradually decrease the voltage from 5V DC. When pin 13 is clipped, measure the voltage of pin 13. ② As in step ① above, apply to pin 4 and measure pin 14, then apply to pin 5 and measure pin 15.
T_{31}	Analog RGB Contrast Adjustment Characteristics	B	B	B	ON	A	A	A	OFF	C	① Input signal 1 (f = 100 kHz, picture period amplitude = 0.2 V_{p-p}) to pin 3. ② When the subaddress (00, unicolor) data are changed to the maximum (3F), the center (20), and the minimum (00), measure the picture period amplitude of pin 13. (vuTXR1, vuTXR2, vuTXR3) ③ Calculate the maximum and minimum amplitude ratios in decibels. ④ As in steps ①, ② and ③ above, input signal 1 to pin 4 and measure pin 14, then input signal 1 to pin 5 and measure pin 15.
T_{32}	Analog RGB Brightness Adjustment Characteristics	B	B	B	ON	A	A	A	OFF	C	① Input signal 2 to pins 3, 4, and 5. ② Adjust the signal 2 amplitude A so that the picture period amplitude of pin 13 is 0.5 V_{p-p}. ③ When the subaddress (05, RGB brightness) data are changed to the maximum (F8), the center (88), and the minimum (08), measure the picture period amplitudes of pins 13, 14, and 15. (vbr_{TX1}, vbr_{TX2}, vbr_{TX3})

NOTE	ITEM	(TEST CONDITIONS V_{CC} = 5 V and 9 V, Ta = 25 ± 3°C) SW MODE & SUB ADDRESS & DATA									MEASUREMENT METHOD
		S_{03}	S_{04}	S_{05}	S_{06}	S_{07}	S_{08}	S_{09}	S_{10}	S_{54}	
T_{33}	Analog RGB Mode On Voltage	B	A	A	OFF	A	A	A	OFF	C	① Input signal 1 (f = 100 kHz, picture period amplitude = 0.2 V_{p-p}) to pin 3. ② Apply an external power supply to pin 6. Gradually increase the voltage from 0 V. ③ When signal 1 is output to pin 13, measure the voltage of pin 6.
T_{34}	Analog RGB Mode Transfer Characteristics	A	A	A	OFF	A	A	A	OFF	C	① Set the subaddress (05, RGB brightness) data to the maximum (F8). ② Input signal 3 (signal amplitude 4.5 V_{p-p}) to pin 6. ③ Measure the switching transfer characteristics of pins 13, 14, and 15 according to diagram T-2. ④ Using the data obtained from the above measurements, calculate the maximum axis difference between the rising and falling edges of transfer delay time.
T_{35}	Crosstalk from Video to Analog RGB	A	A	A	OFF or ON	A	A	A	OFF	A	① Input signal 1 (f = 4 MHz, picture period amplitude = 0.5 V_{p-p}) to pin 54. ② Adjust the input amplitude so that the picture period amplitude of pin 13 is 2 V_{p-p}. ③ Turn SW_6 on. ④ Measure the picture period amplitude (V_{p-p}) of pin 13. (v_{13A}) ⑤ Calculate by the following formula the amount of crosstalk from the video to the analog RGB. $Vv \rightarrow AR = -20 \times \ell og\,(v_{13A}/2)$ ⑥ Repeat steps ④ and ⑤ above on pins 14 and 15.

NOTE	ITEM	(TEST CONDITIONS V_{CC} = 5 V and 9 V, Ta = 25 ± 3°C) SW MODE & SUB ADDRESS & DATA									MEASUREMENT METHOD
		S_{03}	S_{04}	S_{05}	S_{06}	S_{07}	S_{08}	S_{09}	S_{10}	S_{54}	
T_{36}	Crosstalk from Analog RGB to Video	B	B	B	ON or OFF	A	A	A	OFF	C	① Turn SW_6 on. ② Input signal 1 (f = 4MHz, picture period amplitude = 0.5 V_{p-p}) to pin 3. ③ Adjust the input amplitude so that the picture period amplitude of pin 13 is 2 V_{p-p}. ④ Turn SW_6 off. ⑤ Measure the picture period amplitude (V_{p-p}) of pin 13. (v_{13B}) ⑥ Calculate by the following formula the amount of crosstalk from the analog RGB to the video. $vA \rightarrow AR = -20 \times \ell og\,(v_{13B} / 2)$ ⑦ As in steps ② to ⑥ above, input to pin 4 and measure pin 14, then input to pin 5 and measure pin 15.
T_{37}	Analog OSD Gain	A	A	A	OFF	B	B	B	ON	C	① Input signal 1 (f = 100 kHz, picture period amplitude = 0.2 V_{p-p}) to pin 7. ② Measure the picture period amplitude of pin 13. (v_{13R}) ③ As in steps ① and ② above, input to pin 8 and measure pin 14, then input to pin 9 and measure pin 15. (v_{14G}, v_{15B}) ④ $G_{OSDR} = v_{13R} / 0.2$ $G_{OSDG} = v_{14G} / 0.2$ $G_{OSDB} = v_{15B} / 0.2$
T_{38}	Analog OSD Frequency Characteristics	A	A	A	OFF	B	B	B	ON	C	① Input signal 1 (f = 8 MHz, picture period amplitude = 0.2 V_{p-p}) to pin 7. ② Measure the picture period amplitude of pin 13. (v_{13R} 8MHz) ③ As in steps ① and ② above, input to pin 8 and measure pin 14, then input to pin 9 and pin 15. (v_{14G} 8 MHz, v_{15B} 8 MHz) ④ Calculate the frequency characteristics from the above results and the results in T_{37}. ⑤ $Gf_{OSDR} = 20 \times \ell og\,(v_{13R}\ 8\,MHz / v_{13R})$ $Gf_{OSDG} = 20 \times \ell og\,(v_{14G}\ 8\,MHz / v_{14G})$ $Gf_{OSDB} = 20 \times \ell og\,(v_{15B}\ 8\,MHz / v_{15B})$

NOTE	ITEM	(TEST CONDITIONS V_{CC} = 5 V and 9 V, Ta = 25 ± 3°C) SW MODE & SUB ADDRESS & DATA									MEASUREMENT METHOD
		S_{03}	S_{04}	S_{05}	S_{06}	S_{07}	S_{08}	S_{09}	S_{10}	S_{54}	
T_{39}	Analog OSD Output Level	A	A	A	OFF	A	A	A	OFF	C	① When 0V (DC) is input from an external power supply to pin 7, when 7.5 V is input to pin 7, and when no external voltage is applied to pin 7, measure the picture period amplitude of pin 13. (V_{OSD1R}, V_{OSD2R}, V_{OSD3R}) ② As in step ① above, input to pin 8 and measure pin 14, then input to pin 9 and measure pin 15. (V_{OSD1G}, V_{OSD2G}, V_{OSD3G}) (V_{OSD1B}, V_{OSD2B}, V_{OSD3B})
T_{40}	Analog OSD Mode On Voltage	A	A	A	OFF	B	A	A	OFF	C	① Input signal 1 (f = 100 kHz, picture period amplitude = 0.2 V_{p-p}) to pin 7. ② Apply an external power supply to pin 10. Gradually increase the voltage from 0 V. ③ When signal 1 is output to pin 13, measure the pin 10 voltage.
T_{41}	Analog OSD Mode Transfer Characteristics	A	A	A	OFF	A	A	A	OFF	C	① Apply 2.5 V from an external power supply to pins 7, 8, and 9. ② Input signal 4 (signal amplitude = 4.5 V_{p-p}) to pin 10. ③ Measure the switching transfer characteristics of pins 13, 14, and 15 according to diagram T-2. ④ Using the data obtained from the above measurements, calculate the maximum axis difference between the rising and falling edge of the transfer delay time.
T_{42}	RGB Output Self-Diagnosis	A	A	A	OFF	A	A	A	OFF	A	① Set the bus control data to read mode and reset. ② Set to read mode again. ③ Check that the read mode parameter (RGB-OUT) is 0 (error). ④ Measure the voltage of pin 54 and apply that voltage + 0.7 V to pin 53 using an external power supply. ⑤ Set to read mode again. ⑥ Check that the read mode parameter (RGB-OUT) is 1 (OK).

NOTE	ITEM	(TEST CONDITIONS V_{CC} = 5 V and 9 V, Ta = 25 ± 3°C) SW MODE & SUB ADDRESS & DATA									MEASUREMENT METHOD
		S_{03}	S_{04}	S_{05}	S_{06}	S_{07}	S_{08}	S_{09}	S_{10}	S_{54}	
T_{43}	ACB Input Pulse Phase, Amplitude	A	A	A	OFF	A	A	A	OFF	A or C	① Input signal 1 (f = 100 kHz, picture amplitude 0.2 V_{p-p}) to pin 53 and adjust drive data so that the picture period amplitude of pins 14 and 15 equals that of pin 13. ② Set SW54 to C. ③ Measure the voltages on pins 17, 18, and 19 and apply the measured voltages to the pins from an external power supply. ④ Set the subaddress (11) data to (50). ⑤ According to the voltage on pins 13, 14, and 15 in Figure 1 below, determine the phase of ACB input pulse. Note : The phase starts after the V-BLK period. The picture period after the falling edge of FBP input is 1 H ; then, every time H-BLK ends, the period is 2 H, 3 H, and so on. ⑥ According to pins 13, 14, and 15 the voltage on, determine the ACB input pulse amplitude (amplitude from the BLK level at RGB-BLK OFF). 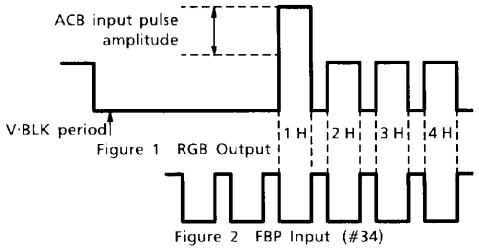 Figure 1 Figure 2 FBP Input (#34)

NOTE	ITEM	(TEST CONDITIONS V_{CC} = 5 V and 9 V, Ta = 25 ± 3°C)									
		SW MODE & SUB ADDRESS & DATA									MEASUREMENT METHOD
		S_{03}	S_{04}	S_{05}	S_{06}	S_{07}	S_{08}	S_{09}	S_{10}	S_{54}	
T_{44}	ACB Clamp Current	A	A	A	OFF	A	A	A	OFF	C	① Set pin 17 to open, connect a 1-kΩ resistor to the pin, and apply 3V to the pin from the power supply. ② When the subaddress (11) data are set to (10), (30), (50), and (70), measure from the waveform of pin 17 the current flowing to GND during the clamp period. (I17a, I17b, I17c I17d) ③ Repeat the measurements in steps ① and ② above on pins 18 and 19. (I18a, I18b, I18c I18d) (I19a, I19b, I19c I19d)
T_{45}	IK Input Amplitude	A	A	A	OFF	A	A	A	OFF	C	① Connect TP13 to TP13b; TP14 to TP14b; TP15 to TP15b. ② Set SW_{20} to b. ③ Set the subaddress (11) data to (50). ④ By referring to Figure 1 of T43, determine the voltage output from pins 13, 14, and 15 (IKR, IKG, IKB) during the ACB pulse input to the signal input to pin 20.

NOTE	ITEM	(TEST CONDITIONS V_{CC} = 5 V and 9 V, Ta = 25 ± 3°C)									
		SW MODE & SUB ADDRESS & DATA									MEASUREMENT METHOD
		S_{03}	S_{04}	S_{05}	S_{06}	S_{07}	S_{08}	S_{09}	S_{10}	S_{54}	
T_{46}	RGB γ Correction Characteristics	A	A	A	OFF	A	A	A	OFF	A	① Input a ramp waveform to pin 54 (Y IN) and adjust the input amplitude so that the picture period amplitude of pin 13 is 2.5 V_{p-p}. ② Adjust the drive adjustment data so that the picture period amplitudes of pins 14 and 15 are equal to that of pin 13. ③ Set the subaddress (13) data to (81). ④ Using pins 13, 14, and 15, calculate the RGBγ start point and its gradient (in decibels) in relation to the off point, using Fig.1 below. 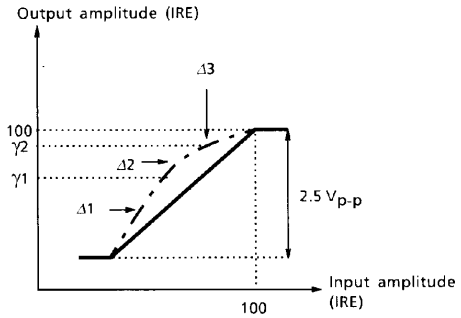

NOTE	ITEM	(TEST CONDITIONS V_{CC} = 5 V and 9 V, Ta = 25 ± 3°C)									
		SW MODE & SUB ADDRESS & DATA									MEASUREMENT METHOD
		S_{03}	S_{04}	S_{05}	S_{06}	S_{07}	S_{08}	S_{09}	S_{10}	S_{54}	
T_{47}	VK Output Characteristics	A	A	A	ON	B	B	B	OFF	C	① Input a sync signal to pin 38. ② Input a ramp waveform (1.25 V_{p-p}) to pins 7, 8, and 9 during the picture period. ③

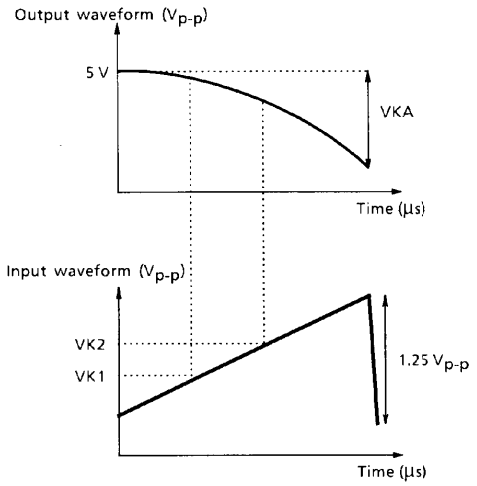

NOTE	ITEM	SYMBOL	SW MODE & SUB ADDRESS & DATA									(TEST CONDITIONS V_{CC} = 5 V and 9 V, Ta = 25 ± 3°C) MEASUREMENT METHOD
			S_{03}	S_{04}	S_{05}	S_{06}	S_{07}	S_{08}	S_{09}	S_{10}	S_{54}	
T_{48}	ACB Protection Circuit Operating monitor 1	ACBPR ACBPG	A	A	A	OFF	A	A	A	OFF	C	① Set the subaddress (11) data to (A0). ② Apply 8.0 V to pin 17. ③ Monitor pin 13 and confirm that the picture period has not dropped to the BLK level (ACBPR). ④ Monitor pin 14 and confirm that the picture period has not dropped to the BLK level (ACBPG)
T_{49}	ACB Protection Circuit Operating monitor 2	ACBBRAR ACBBRAG	A	A	A	OFF	A	A	A	OFF	C	① Set the subaddress (11) data to (C0). ② Apply 8.0 V to pin 17. ③ Monitor pin 13 and confirm that the picture period is at the BLK level (ACBBRAR). ④ Monitor pin 14 and confirm that the picture period is at the BLK level (ACBBRAG)
T_{50}	ACB Protection Circuit Operating monitor 3	ACBBRLO	A	A	A	OFF	A	A	A	OFF	C	① Set the subaddress (11) data to (C0). ② Apply 6.8 V to 9 V V_{CC} (pin 16). ③ Apply 6.8 V TO pin 17. ④ Monitor pin 13 and confirm that the picture period has not dropped to the BLK level (ACBBRLO)
T_{51}	Base Band Tint Adjustment Characteristics	ANG RMIN ANG BMIN ANG RMAX ANG BMAX	A	A	A	S52 OFF	S53 ON	— ON	—	OFF	C	① Change subaddress (05) H to (81) H. ② Set unicolor = max ; bright = max ; color = center. ③ Input signal 1 (f_0 = 100 kHz, 100 mV_{p-p}) to pin 53. ④ To pin 52, input a signal with the same amplitude but 90°C phase advanced compared to the signal input to pin 53. ⑤ When subaddress (14) H is changed to (C0) H → (80) H, measure the amount of change in the output phase of pin 13. (ANG RMIN) ⑥ Under the same conditions as ⑤ above, measure the amount of change in the output phase of pin 15. (ANG BMIN) ⑦ When subaddress (14) H is changed to (C0) H → (FF), measure the amount of change in the output phase of pin 13. (ANG RMAX) ⑧ Under the same conditions as ⑦ above, measure the amount of change in the output phase of pin 15. (ANG BMAX)

NOTE	ITEM	SYMBOL	SW MODE & SUB ADDRESS & DATA									(TEST CONDITIONS V_{CC} = 5 V and 9 V, Ta = 25 ± 3°C) MEASUREMENT METHOD
			S_{03}	S_{04}	S_{05}	S_{06}	S_{07}	S_{08}	S_{09}	S_{10}	S_{54}	
T_{52}	Base Band Tint Adjustment Position	BUS B0	A	A	A	OFF	ON	ON	—	OFF	C	① Change subaddress (05) H to (81) H. ② Set unicolor = max ; bright = max ; color = center. Relative amplitude, phase switching: Change subaddress (12) H to (00). ③ Input signal 1 (f_0 = 100 kHz, 100 mV_{p-p}) to pin 53. ④ To pin 52, input a signal with the same amplitude but 90°C phase advanced compared to the signal input to pin 53. ⑤ Changing subaddress (14) H from (C0) H, read the transmission data at subaddress (14) H when the output phase of the pin 15 signal is the same as the input phase of the pin 53 signal. (BUS B0)

Deflection stage

NOTE	ITEM	TEST CONDITIONS (DEF V_{CC} = 9 V, Ta = 25 ± 3°C, BUS DATA = POWER-ON RESET)		
		SW MODE		MEASUREMENT METHOD
		SW_{34}	SW_{38}	
D_1	Sync separation Input Sensitivity Current	OFF	B	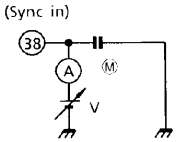 When the number of H periods in the #33 (VD out) waveform changes from 297 to 225, increase the voltage from 3 V and measure the value at Ⓐ in the diagram.
D_2	V separation Filter Pin Source Current	OFF	B	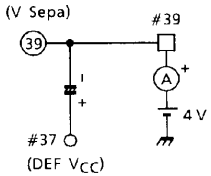 When the subaddress (0D) D_1 is set to (1), measure the value at Ⓐ in the diagram.
D_3	V Separation Level	OFF	B	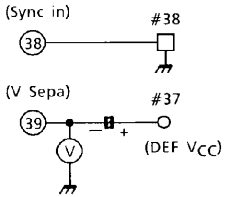 When #38 (Sync in) is connected to GND, measure the #39 (VSEP FILTER) voltage.
D_4	H AFC Phase Detection Current H AFC Phase Detection Current Ratio	OFF	A	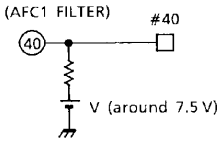 Set the voltage to around 7.5 V, equivalent to when #40 (AFC1 FILTER) has no load. When a signal as shown in the diagram below is input to #38 (Sync in) from TG7, calculate V_1 and V_2 using the #40 waveform. $I_{DET} = V_1 \div 1\ k\Omega\ (\mu A)$ $\Delta I_{DET} = (V_1 / V_2 - 1) \times 100\ (\%)$ 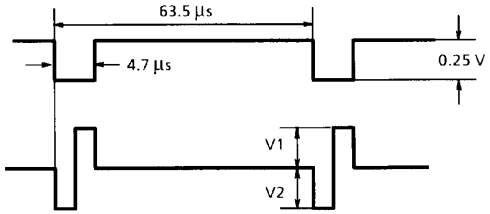
D_5	Phase Detection Stop Period	OFF	A	Input a composite video signal to #38 and measure the V mask period of the #40 (AFC1 FILTER) waveform.

TA1310AN

D5 : Phase detection stop period

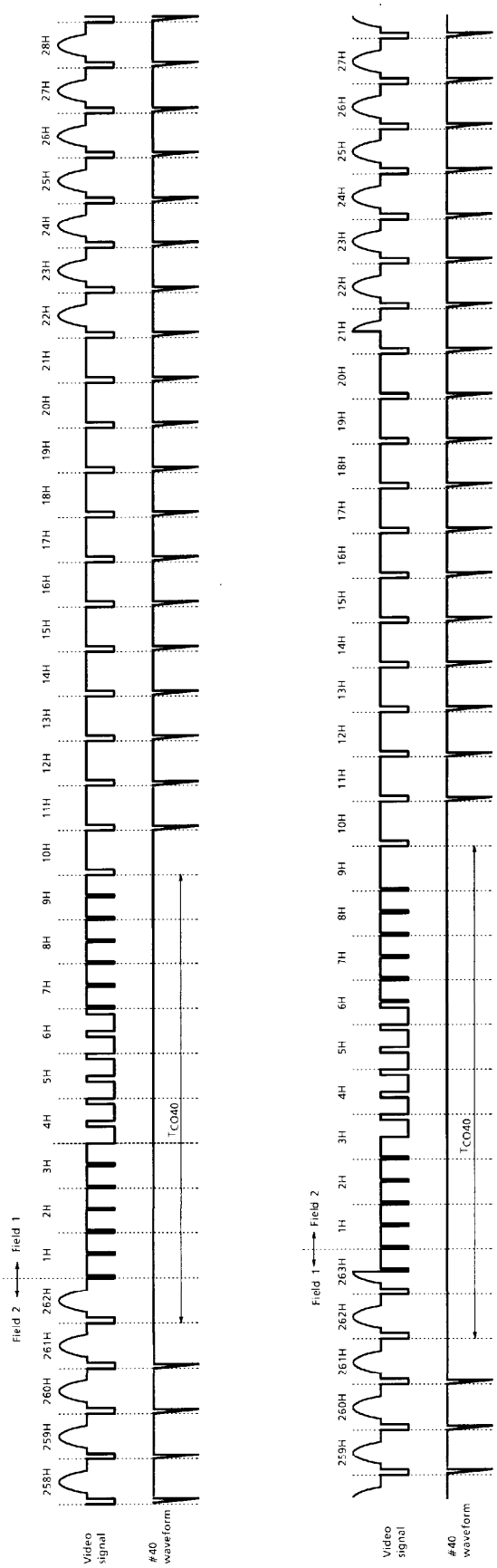

TA1310AN−77

NOTE	ITEM	TEST CONDITIONS (DEF V_{CC} = 9 V, Ta = 25 ± 3°C, BUS DATA = POWER-ON RESET)		
		SW MODE		MEASUREMENT METHOD
		SW_{34}	SW_{38}	
D_6	32*f_H VCO Oscillation Start Voltage	OFF	B	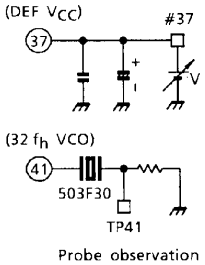 Increase the voltage from 2.5 V. When an oscillation waveform appears on TP41, measure the voltage. At the same time, check that no waveform is output (0V DC) to #35 (H out). (Apply only DEF V_{CC}.)
D_7	Horizontal Output Start Voltage	OFF	B	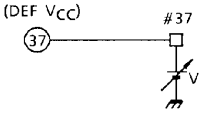 Increase the voltage. When a horizontal pulse appears on #35 (H out), measure the voltage. Note that the horizontal oscillation frequency at this time is near f_{HO} (15.7 kHz ± 1 kHz). (Apply only DEF V_{CC}.) ① Under the above conditions, when no horizontal pulse is output on #35, read D_4 in bus read mode. (Apply also the chroma V_{CC}.) ($V_{BUS\ HOFF}$) ② Under the above conditions, when a horizontal pulse is output on #35, read D_4 in bus read mode. (Apply also the chroma V_{CC}.) ($V_{BUS\ HON}$)
D_8	Horizontal Output Pulse Duty	OFF	B	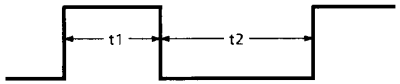 Observe the #35 (H out) waveform and measure t1 and t2. $T_{H35} = \frac{t1}{t1 + t2} \times 100\ (\%)$
D_9	Phase Detection Stop Mode	OFF	B	Input a composite video signal to TP38. When the subaddress (0D) D_1 is set to (1), measure the oscillation frequency of the #35 (H out) waveform.
D_{10}	Horizontal Free-Run Frequency	OFF	B	Measure the oscillation frequency of #35 (H out).
D_{11}	Horizontal Oscillation Frequency Range	OFF	B	① When #40 (AFC1 FILTER) is connected to DEF V_{CC} via a 10-kΩ resistor, measure the #35 (H out) oscillation frequency. (V_{HMIN}) ② When #40 (AFC1 FILTER) is connected to GND via a 68-kΩ resistor, measure the #35 (H out) oscillation frequency. (V_{HMAX})
D_{12}	Horizontal Oscillation Control Sensitivity	OFF	B	When the voltage on #40 (AFC1 FILTER) is varied by ±0.05 V with a horizontal oscillation frequency of 15.734 kHz, calculate the #35 (H out) frequency variation rate.

NOTE	ITEM	TEST CONDITIONS (DEF V_{CC} = 9 V, Ta = 25 ± 3°C, BUS DATA = POWER-ON RESET)		
		SW MODE		MEASUREMENT METHOD
		SW_{34}	SW_{38}	
D_{13}	Horizontal Output Voltage	OFF	B	① Measure the high-level voltage of #35 (H out) (when #35 is connected to GND via a 481-Ω resistor). (V_{H35}) ② Measure the low-level voltage of #35 (H out) (when #35 is connected to GND via a 481-Ω resistor). (V_{L35})
D_{14}	Supply Voltage Dependence of Horizontal Oscillation Frequency	OFF	B	When the #37 (DEF V_{CC}) voltage is varied from 8.5 V, to 9.5 V, measure the variation in the #35 (H out) oscillation frequency.
D_{15}	Temperature Dependence of Horizontal Oscillation Frequency	OFF	B	When the temperature is varied through the range −20°C to +60°C, measure the variation in the #35 (H out) oscillation frequency.
D_{16}	Horizontal Sync Phase	OFF	A	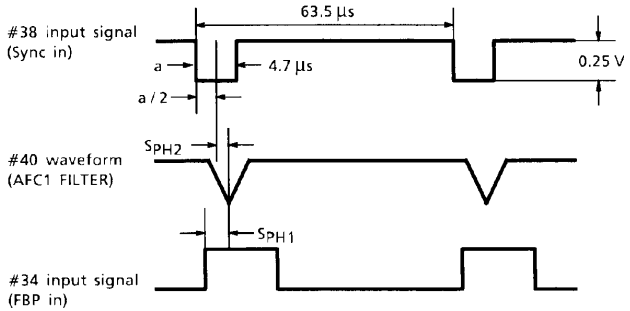 When a signal as shown at left is input to TP38 from TG7, measure the phase difference of the #34 (FBP in) waveform in relation to the #40 (AFC1 FILTER) waveform (S_{PH1}). Also measure the phase difference of the #40 waveform in relation to the center of the input horizontal sync signal (S_{PH2}).
D_{17}	Horizontal Picture Phase Adjustment Range	OFF	A	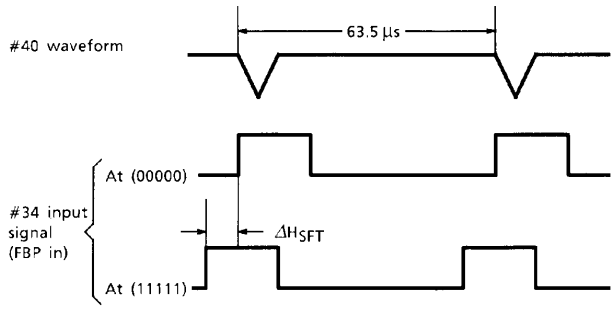 Under the above conditions, when the subaddress (0B) D_7 to D_3 are varied from (00000) to (11111), measure the phase variation in the #34 (FBP in) waveform.

NOTE	ITEM	TEST CONDITIONS (DEF V_{CC} = 9 V, Ta = 25 ± 3°C, BUS DATA = POWER-ON RESET)		
		SW MODE		MEASUREMENT METHOD
		SW_{34}	SW_{38}	
D_{18}	Horizontal Blanking Pulse Threshold	ON	A	Decrease the amplitude of #34 (FBP in) from 9 V_{p-p}. When AFC2 stops locking, measure the amplitude. (V_{HBLK1}) Increase the amplitude of #34 (FBP in) from 0 V_{p-p}. When horizontal blanking is applied to #13 (R in), measure the amplitude. (V_{HBLK2})
D_{19}	Curve Correction Range	OFF	A	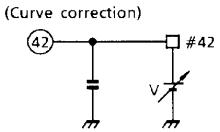 Input a signal as shown below to TP38 from TG7. When the voltage is varied from 3 V to 6 V, measure the phase variation in the #34 (FBP in) waveform. 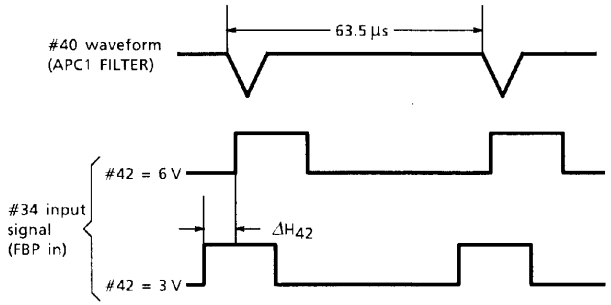
D_{20}	H Cycle Black Peak Detection Disable Pulse	OFF	A	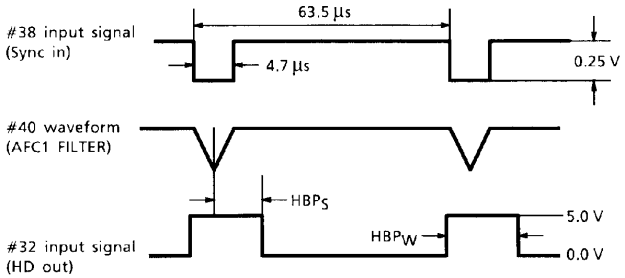 Set the subaddress (01) D_7 to (0), set the subaddress (05) D_3~D_1 to (010), and set the subaddress (0C) D_0 to (1). When a signal as shown at left is input to TP38 from TG7, measure the #32 (HD out) waveform phase difference HBP_S and pulse width HBP_W in relation to the #40 (AFC1 FILTER) waveform.
D_{21}	Threshold of External Black Peak Detection Disable Pulse	OFF	A	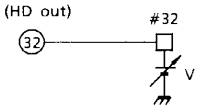 Set the subaddress (02) D_7 to (1). Increase the voltage from 0 V. When #52 reaches 3.4 V DC, measure the voltage.

NOTE	ITEM	TEST CONDITIONS (DEF V_{CC} = 9 V, Ta = 25 ± 3°C, BUS DATA = POWER-ON RESET)		
		SW MODE		MEASUREMENT METHOD
		SW_{34}	SW_{38}	
D_{22}	Clamp Pulse Start Phase Clamp Pulse Width	OFF	A	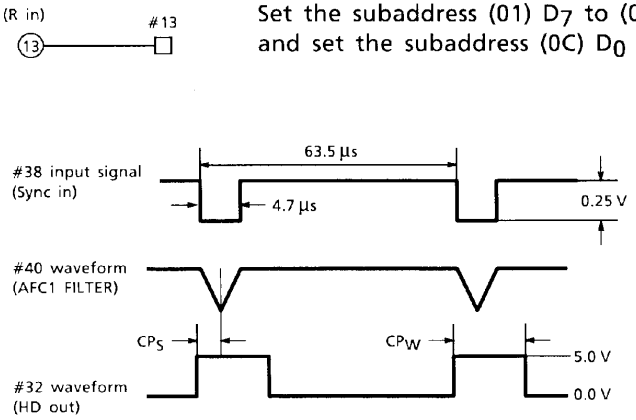 Set the subaddress (01) D_7 to (0), set the subaddress (05) D_3~D_1 to (010), and set the subaddress (0C) D_0 to (1). Input a signal as shown at left to TP38 from TG7, then measure the #32 (HD out) waveform phase difference CP_S and pulse width CP_W in relation to the #40 (AFC1 FILTER) waveform.
D_{23}	HD Output Start Phase HD Output Pulse Width HD Output Amplitude	OFF	A	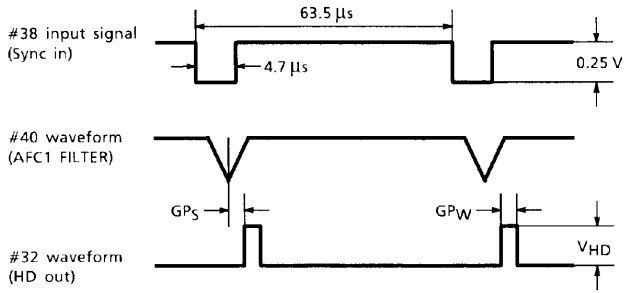 Input a signal as shown at left to TP38 from TG7, then measure the #32 (HD out) waveform phase difference HD_S and pulse width HD_W and V_{HD} in relation to the #40 (AFC1 FILTER) waveform.
D_{24}	Gate Pulse Start Phase Gate Pulse Width	OFF	A	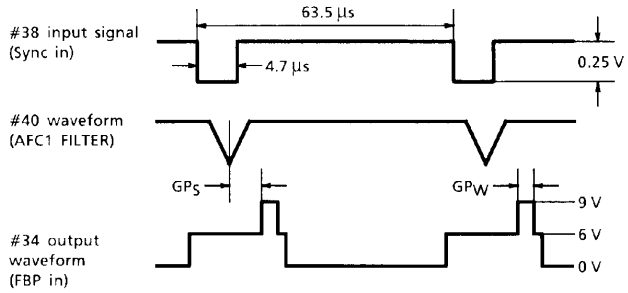 Input a signal as shown at left to TP38 from TG7, then measure the #34 (FBP in) waveform phase difference GP_S and pulse width GP_W in relation to the #40 (AFC1 FILTER) waveform.

TA1310AN

D24 : Gate pulse V mask period

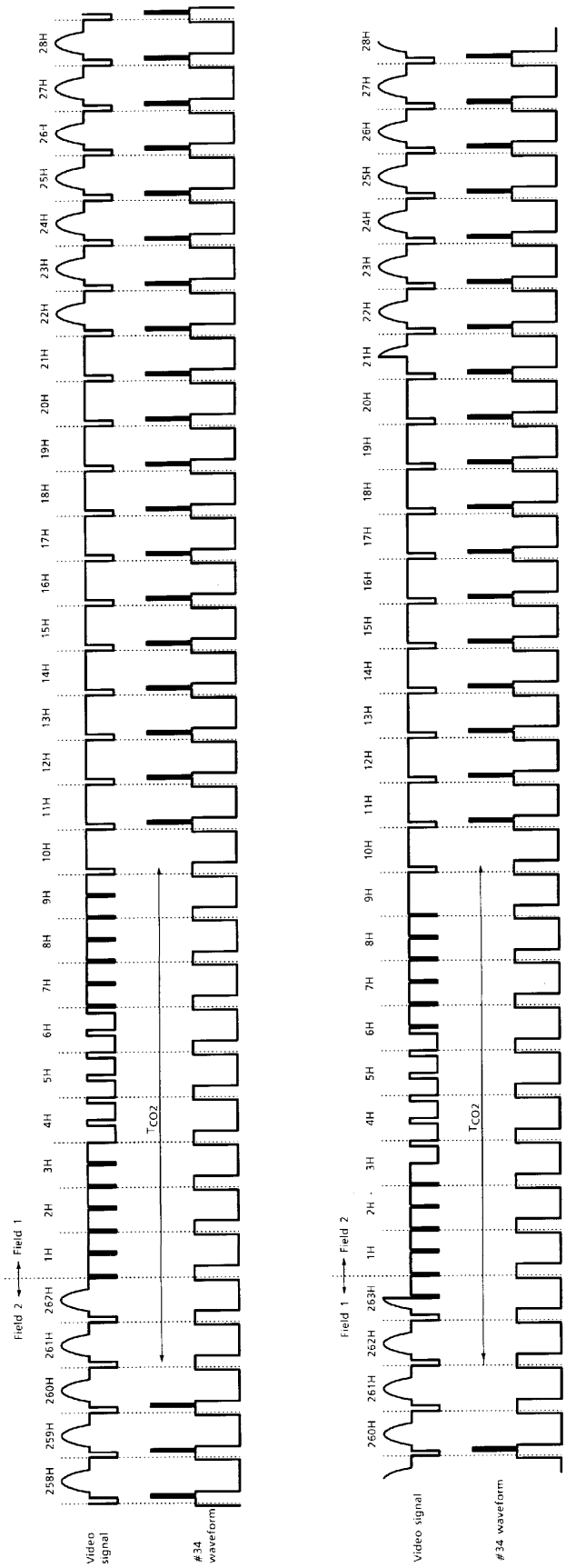

TA1310AN−82

NOTE	ITEM	TEST CONDITIONS (DEF V_{CC} = 9 V, Ta = 25 ± 3°C, BUS DATA = POWER-ON RESET)		
		SW MODE		MEASUREMENT METHOD
		SW_{34}	SW_{38}	
D_{25}	Gate Pulse V Mask Period	OFF	A	Input a composite video signal to TP38, observe the #34 (FBP in) waveform, and measure the V mask period.
D_{26}	Sync Out Low Level	OFF	A	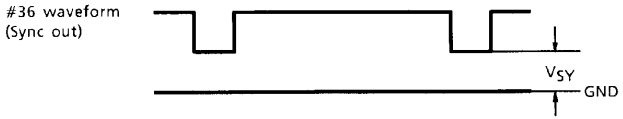 Input a composition video signal to TP38, observe the #36 (Sync out) waveform, and measure the low level of the sync period.
D_{27}	Vertical Oscillation Start Voltage	OFF	B	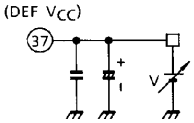 Increase the voltage from 0 V. When a pulse is output from #33 (VD out), measure the voltage. (Apply only DEF V_{CC}.)
D_{28}	Vertical Free-Run Frequency	OFF	B	Measure the frequency of #33 (VD out).
D_{29}	Vertical Output Voltage	OFF	B	① Measure the high level voltage of the #33 (VD out) waveform. (V_{VH}) ② Measure the low level voltage of the #33 (VD out) waveform. (V_{VL})
D_{30}	Service Mode Switching	OFF	B	When the subaddress (0C) D_0 is set to (1), check that the #27 (V.Ramp) waveform is low (3.4 V DC).
D_{31}	Vertical Pull-In Range	OFF	C	Input a composite video signal to TP38, vary the vertical frequency of this signal in 0.5-H steps, and measure the vertical pull-in range.
D_{32}	Vertical Frequency Forced 263H Vertical Frequency Forced 262.5H	OFF	B	① Measure the number of H periods of #33 (HD out) when the subaddress (0D) D_1 and D_0 are set to (10). (f_{V1}) ② Measure the number of H periods of #33 (HD out) when the subaddress (0D) D_1 and D_0 are set to (11). (f_{V2})
D_{33}	Vertical Blanking Off Mode	OFF	B	Set the subaddress (01) D_7 to (1) and check that no vertical or horizontal blanking pulse is applied to #13 (R out), #14 (G out), or #15 (B out).

NOTE	ITEM	TEST CONDITIONS (DEF V_{CC} = 9 V, Ta = 25 ± 3°C, BUS DATA = POWER-ON RESET)		
		SW MODE		MEASUREMENT METHOD
		SW_{34}	SW_{38}	
D_{34}	Vertical Output Pulse Width	OFF	C	Input a composite video signal to TP38, then measure the #33 (VD out) vertical pulse delay T_D and pulse width T_W in relation to the vertical sync signal of #38 (Sync in).
D_{35}	RGB Output Vertical Blanking Pulse Start Phase RGB Output Vertical Blanking Pulse Stop Phase	OFF	C	Input a composite video signal to TP38, then measure the #13 (R out) waveform phase difference VR_{S1} and pulse width VR_{S2} in relation to the #38 (Sync in) waveform. Repeat measurement on #14 and #15. Set the subaddress (11) D_4~D_1 to (1111) and the subaddress (12) D_4~D_1 to (1111).
D_{36}	V Cycle Black Peak Detection Disable Pulse (Normal)	OFF	C	Input a composite video signal to TP38 and measure the V cycle black peak detection disable pulse period of #55 (BLACK PEAK DET).
D_{37}	V Cycle Black Peak Detection Disable Pulse (Zoom)	OFF	C	Under the conditions in D_{38} above, set the subaddress (0C) D_1 to (1) and measure the V cycle black peak detection disable period of #55.

D34 : Vertical output pulse width, vertical output pulse phase variation, and vertical output pulse phase range

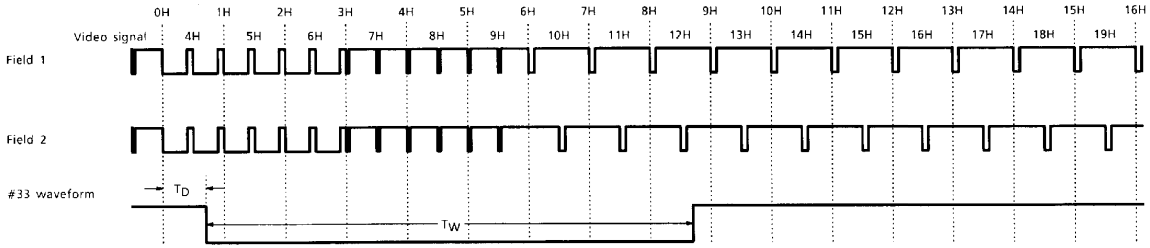

D35 : RGB output vertical blanking pulse start and stop phases

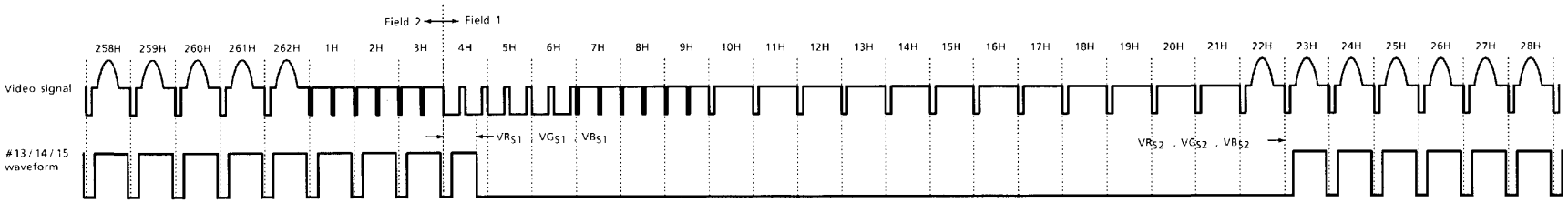

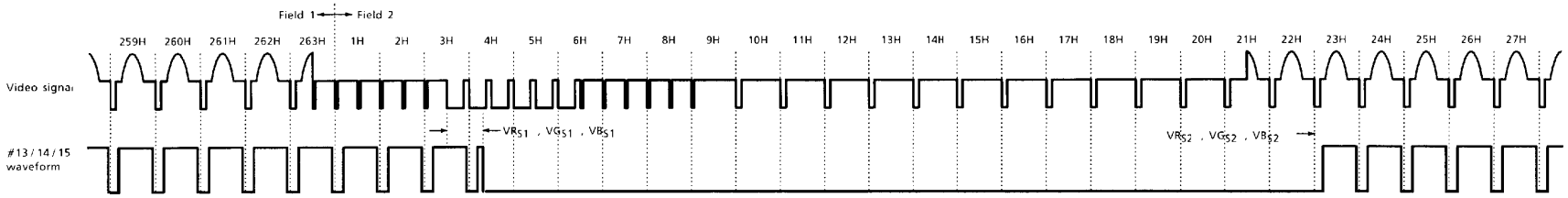

D36 : Video mute period (normal)

Field 2 to field 1

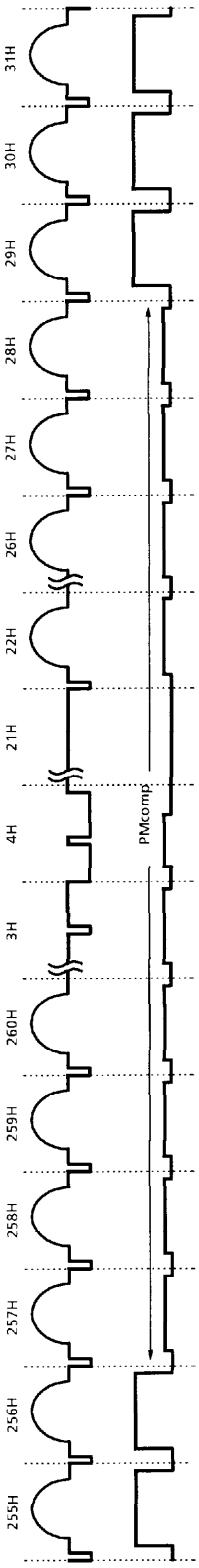

Field 1 to field 2

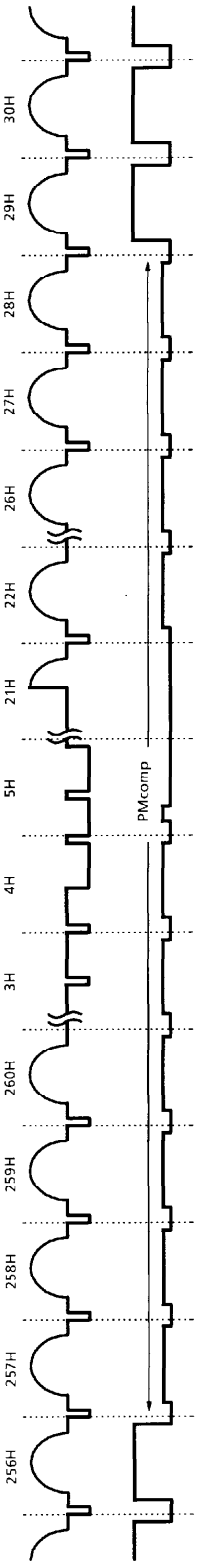

D37 : Video mute period (zoom)

Field 2 to field 1

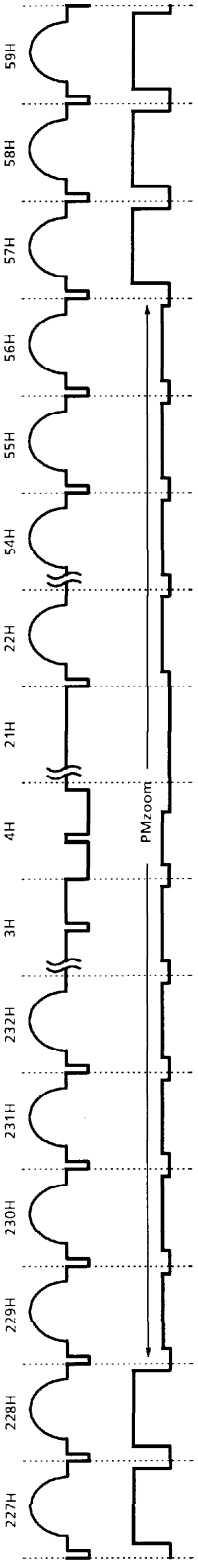

Field 1 to field 2

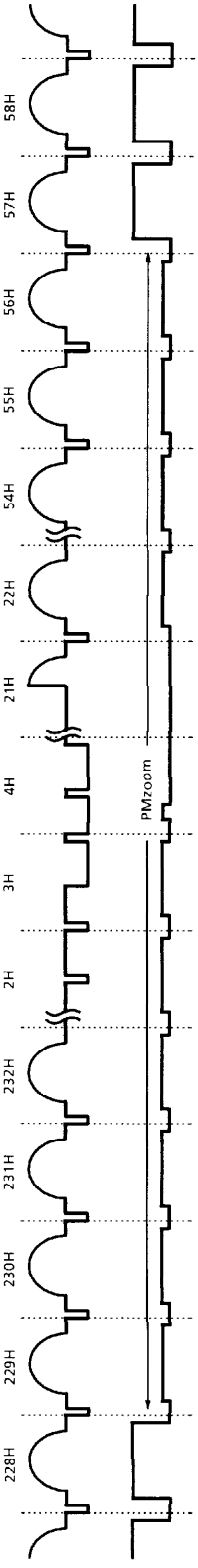

TA1310AN—86

D38 : V cycle black peak detection disable pulse (normal)

Field 2 to field 1

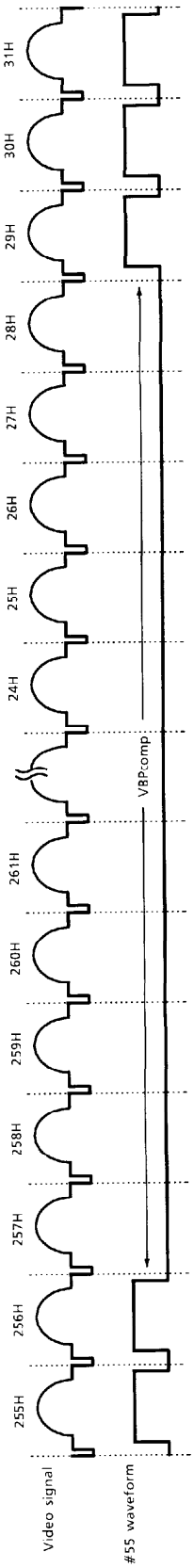

Field 1 to field 2

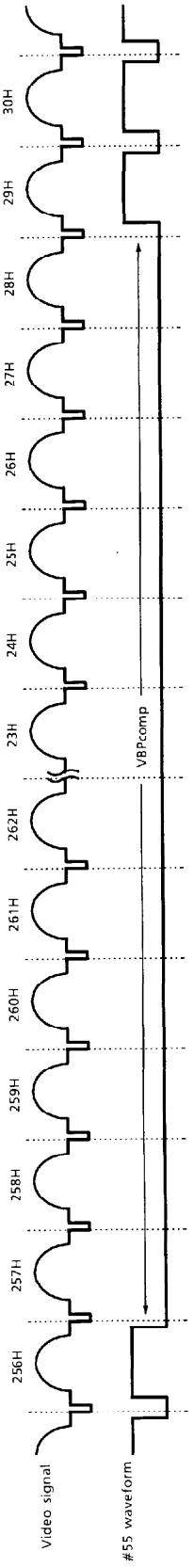

D39 : V cycle black peak detection disable pulse (zoom)

Field 2 to field 1

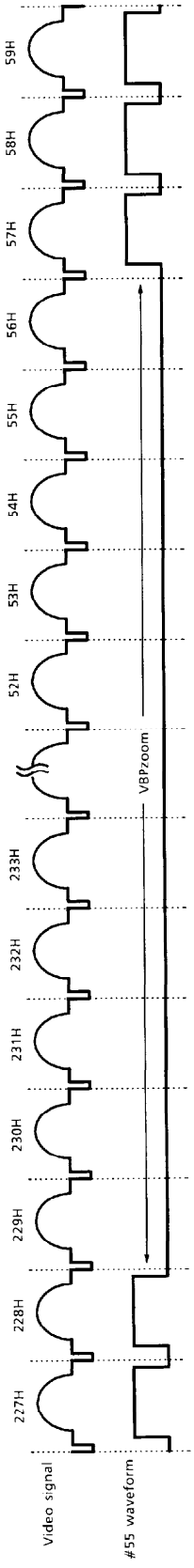

Field 1 to field 2

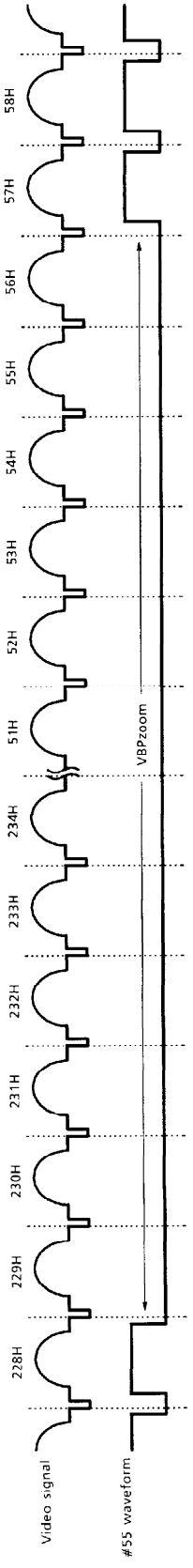

TA1310AN—87

Deflection correction stage

NOTE	ITEM	TEST CONDITIONS (DEF V_{CC} = 9 V, Ta = 25 ± 3°C, BUS DATA = POWER-ON RESET) SW MODE SW_{28}	MEASUREMENT METHOD
G_1	Vertical Ramp Amplitude	A	Measure the amplitude of the vertical ramp wave on #27. 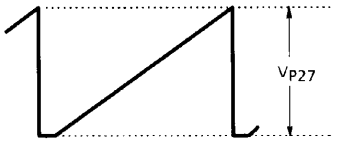 #27 waveform
G_2	Vertical Amplification	A	Set #24 and #25 to open. Set the subaddress (0C) data to (81). Connect #25 to an external power supply. When the voltage is varied from 5.5 V to 6.5 V, measure the vertical amplification on the #24 voltage. (G_V) (V_{H24}) (V_{L24}) 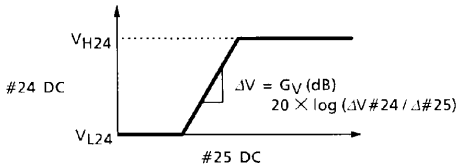
G_3	Vertical Amp Maximum Output Voltage	A	
G_4	Vertical Amp Minimum Output Voltage	A	
G_5	Vertical Amp Maximum Output Current	A	Set #24 and #25 to open. Apply 7 V to #25 from an external source. Insert an ammeter between #24 and GND, and measure the current. 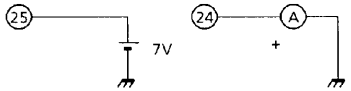
G_6	Vertical NF Sawtooth Wave Amplitude	A	Measure the amplitude of the #25 waveform (vertical sawtooth waveform). 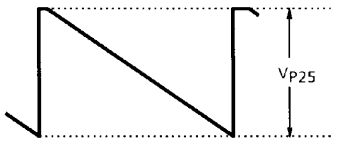 #25 waveform
G_7	Vertical Amplitude Range	A	When the subaddress (0C) data are set to (00) and (FC), measure the amplitudes of the #25 waveform (vertical sawtooth waveform) $V_{P25\,(00)}$ and $V_{P25\,(FC)}$. $V_{PH} = \pm \frac{V_{P25\,(FC)} - V_{P25\,(00)}}{V_{P25\,(FC)} + V_{P25\,(00)}} \times 100\,(\%)$

NOTE	ITEM	TEST CONDITIONS (DEF V_{CC} = 9 V, Ta = 25 ± 3°C, BUS DATA = POWER-ON RESET)	
		SW MODE SW_{28}	MEASUREMENT METHOD
G_8	Vertical Linearity Correction Maximum Value	A	Set the subaddress (0E) data to (F8). Change the subaddress (10) $D_7 \sim D_4$ so that the #22 parabola waveform is symmetrical. Set the subaddress (0E) data to (00). When the subaddress (0F) data are (80), measure the #25 waveform $V_{1\,(80)}$ and $V_{2\,(80)}$. Likewise, when the subaddress (0F) data are (00) and (F0), measure $V_{1\,(00)}$, $V_{2\,(00)}$, $V_{1\,(F0)}$, and $V_{2\,(F0)}$. $V_l = \pm \dfrac{V_{1\,(00)} - V_{1\,(F0)} + V_{2\,(F0)} - V_{2\,(00)}}{2 \times (V_{1\,(80)} + V_{2\,(80)})}$ #22 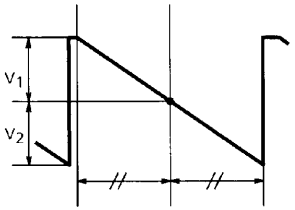 #25
G_9	Vertical S Correction Maximum Value	A	Set the subaddress (0E) data to (F8). Change the subaddress (10) $D_7 \sim D_4$ so that the #22 parabola waveform is symmetrical. Set the subaddress (0E) data to (00). When the subaddress (0E) data are (80), measure the amplitude of the #25 waveform $V_{S25\,(80)}$. Likewise, when the subaddress (0E) data are (87), measure the amplitude of the #25 waveform $V_{S25\,(87)}$. $V_S = \pm \dfrac{V_{S25\,(80)} - V_{S25\,(87)}}{V_{S25\,(80)}} \times 100\,(\%)$ 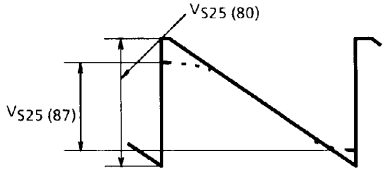

NOTE	ITEM	TEST CONDITIONS (DEF V_{CC} = 9 V, Ta = 25 ± 3°C, BUS DATA = POWER-ON RESET)	
		SW MODE SW_{28}	MEASUREMENT METHOD
G_{10}	Vertical NF Center Voltage	A	Set the subaddress data (0E) to (F8). Change the subaddress (10) $D_7 \sim D_4$ so that the #22 parabola waveform is symmetrical. Set the subaddress data (0E) to (00). Measure the center voltage V_C of the #25 waveform. 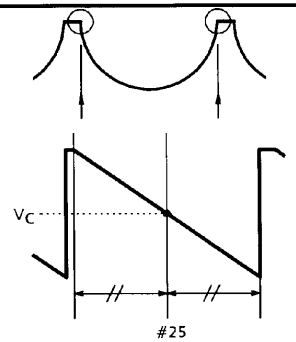
G_{11}	Vertical NF DC Change	A	Under the conditions in G_{10} above, set the subaddress (13) data to (80) and measure the vertical NF center voltage $V_{C(80)}$. Next, set the subaddress (13) data to (00) and measure the vertical NF center voltage $V_{C(00)}$. $V_{DC} = \pm V_{C(00)} - V_{C(80)}$ (V)
G_{12}	Vertical Amplitude EHT Correction	A	Set the subaddress (0E) data to (F8). Change the subaddress (10) $D_7 \sim D_4$ so that the #22 parabola waveform is symmetrical. Set the subaddress (0E) data to (00). Connect #28 to GND and measure the amplitude of the #25 waveform $V_{EHT(0V)}$. Connect #28 to a 5-V power supply and measure the amplitude of the #25 waveform $V_{EHT(5V)}$. $VEHT = \frac{V_{EHT(5V)} - V_{EHT(0V)}}{V_{EHT(5V)}} \times 100\ (\%)$

NOTE	ITEM	TEST CONDITIONS (DEF V_{CC} = 9 V, Ta = 25 ± 3°C, BUS DATA = POWER-ON RESET)	
		SW MODE SW_{28}	MEASUREMENT METHOD
G_{13}	E-W NF Maximum DC Value (Picture Width)	A	Set the subaddress (0E) data to (F8). Change the subaddress (10) $D_7 \sim D_4$ so that the #22 parabola waveform is symmetrical. Set the subaddress (0E) data to (00). Set the subaddress (0D) data to (00) and measure the #22 voltage V_{L22}. Set the subaddress (0D) data to (FC) and measure the #22 voltage V_{H22}. 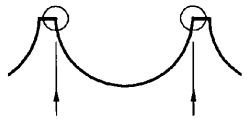 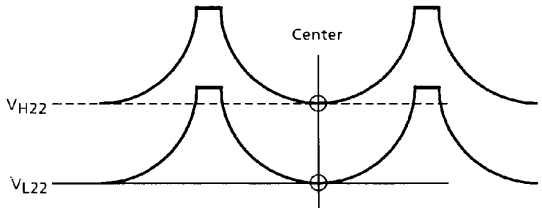 #22 waveform
G_{14}	E-W NF Minimum DC Value (Picture Width)		
G_{15}	E-W NF Parabola Maximum Value (Parabola)	A	Set the subaddress (0D) data to (00) and the subaddress (0E) data to (F8). Measure the amplitude of the #22 waveform (parabola waveform) V_{PB}. #22 waveform

NOTE	ITEM	TEST CONDITIONS (DEF V_{CC} = 9 V, Ta = 25 ± 3°C, BUS DATA = POWER-ON RESET)	
		SW MODE SW_{28}	MEASUREMENT METHOD
G_{16}	E-W NF Corner Correction (Corner)	A	Set the subaddress (0E) data to (F8). Change the subaddress (10) $D_7 \sim D_4$ so that the #22 parabola waveform is symmetrical. Set the subaddress (10) $D_3 \sim D_0$ to (0) and measure the amplitude of the #22 waveform $V_{CR\,(0)}$. Likewise, when the subaddress (10) data are set to (F), measure the #22 waveform amplitude $V_{CR\,(F)}$. $V_{CR} = V_{CR\,(F)} - V_{CR\,(0)}$ 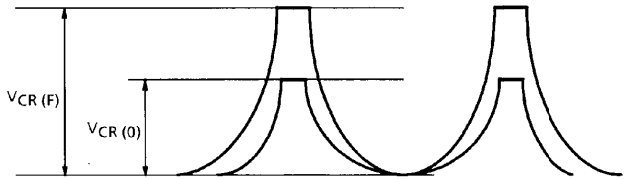
G_{17}	Parabola Symmetry Correction	A	Set the subaddress (10) data to (00) and measure the vertical NF center voltage of the #25 waveform $V_{C\,(00)}$. Likewise, when the subaddress (10) data are set to (FC), measure the #25 voltage $V_{C\,(FC)}$. $V_{TR} = \pm \frac{V_{C\,(00)} - V_{C\,(FC)}}{2 \times V_{P25}} \times 100\,(\%)$ 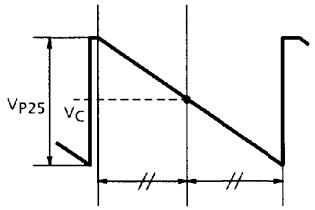

NOTE	ITEM	SW MODE SW_{28}	TEST CONDITIONS (DEF V_{CC} = 9 V, Ta = 25 ± 3°C, BUS DATA = POWER-ON RESET) MEASUREMENT METHOD
G_{18}	E-W Amp Maximum Output Current	A	Connect an ammeter between #23 and GND. Measure the current. 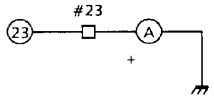
G_{19}	AGC Operating Current 1	A	Measure the TP26 waveform peak value. (V_{AGC0}) Set the subaddress (06) D_0 to (1) and repeat the measurement. (V_{AGC1}) $I_{AGC0} = V_X \div 200$ (μA) (I_{AGC1}) 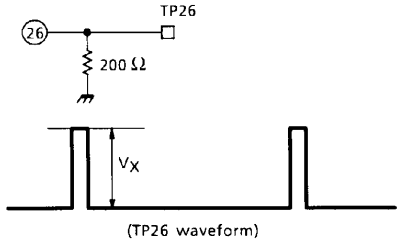
G_{20}	AGC Operating Current 2	A	
G_{21}	Vertical Guard Voltage	A	Set #25 to open. Connect an external power supply to #25. Decrease the voltage from 5 V. When full blanking is applied to #13, measure the voltage.
G_{22}	E/W Output Self-Diagnosis	A	Connect a 5-V external power supply to #23. Read D_2 in bus read mode. (V_{BUS} EW_{OFF}) When the external power supply connected to #23 is disconnected, read D_2 in bus read mode. Ensure that an E/W waveform is output from #22. (V_{BUS} EW_{ON})
G_{23}	V-Out Output Self-Diagnosis	A	Connect a 9-V external power supply to #24. Read D_3 in bus read mode. (V_{BUS} V_{OFF}) When the external power supply connected to #24 is disconnected, read D_3 in bus read mode. Ensure that a V-out waveform is output from #25. (V_{BUS} V_{ON})
G_{24}	Vertical Blanking Check	A	① Set the subaddress (0C) data to (81). When the subaddress (11) D_4~D_0 are changed from 0000 to 1111, check that the #13 blanking stop phase begins. (V_{BLK1}) ② When the subaddress (12) D_4~D_0 are changed from 0000 to 1111, check that the #13 blanking start phase begins. (V_{BLK2})
G_{25}	V Centering DAC Output	A	① Set the subaddress (13) data to (00) and measure the #21 voltage V_{21L}. ② Set the subaddress (13) data to (80) and measure the #21 voltage V_{21M}. ③ Set the subaddress (13) data to (FE) and measure the #21 voltage V_{21H}.
G_{26}	V NFB Pin Input Current	A	Connect a 9-V V_{CC} via a 100-kΩ resistor to #25. Measure the sink current on #25 according to the voltage difference of the 100-kΩ resistance. 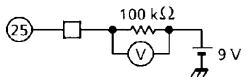 $I_{25} = V / 100$ kΩ

① Input signal C-1

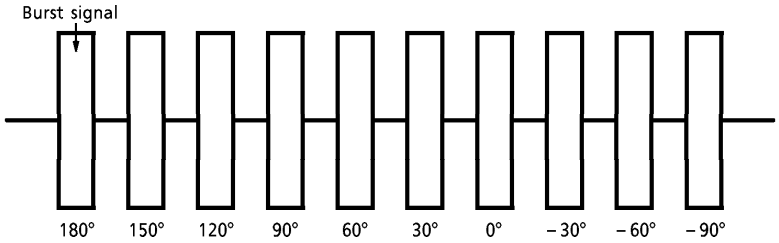

② Input signal C-2

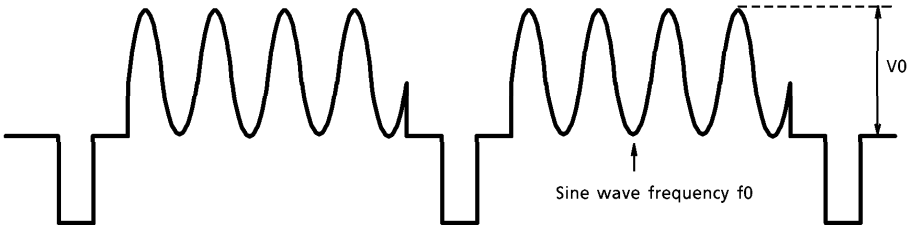

③ Input signal C-3

Fig.C Test signals for TA1310N chroma, color difference, and Y stage

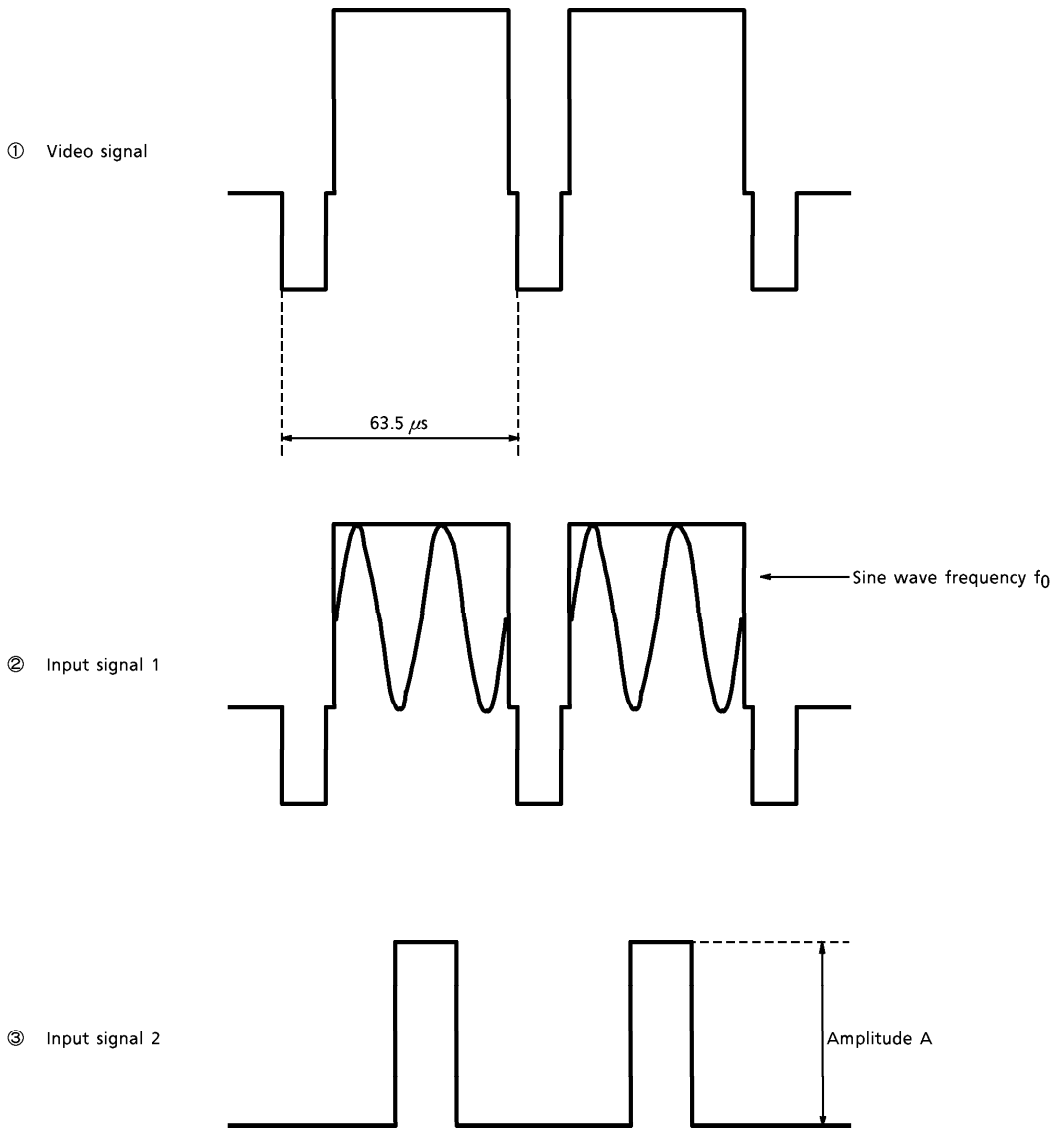

Fig.T-1 Test signals for TA1310N text stage

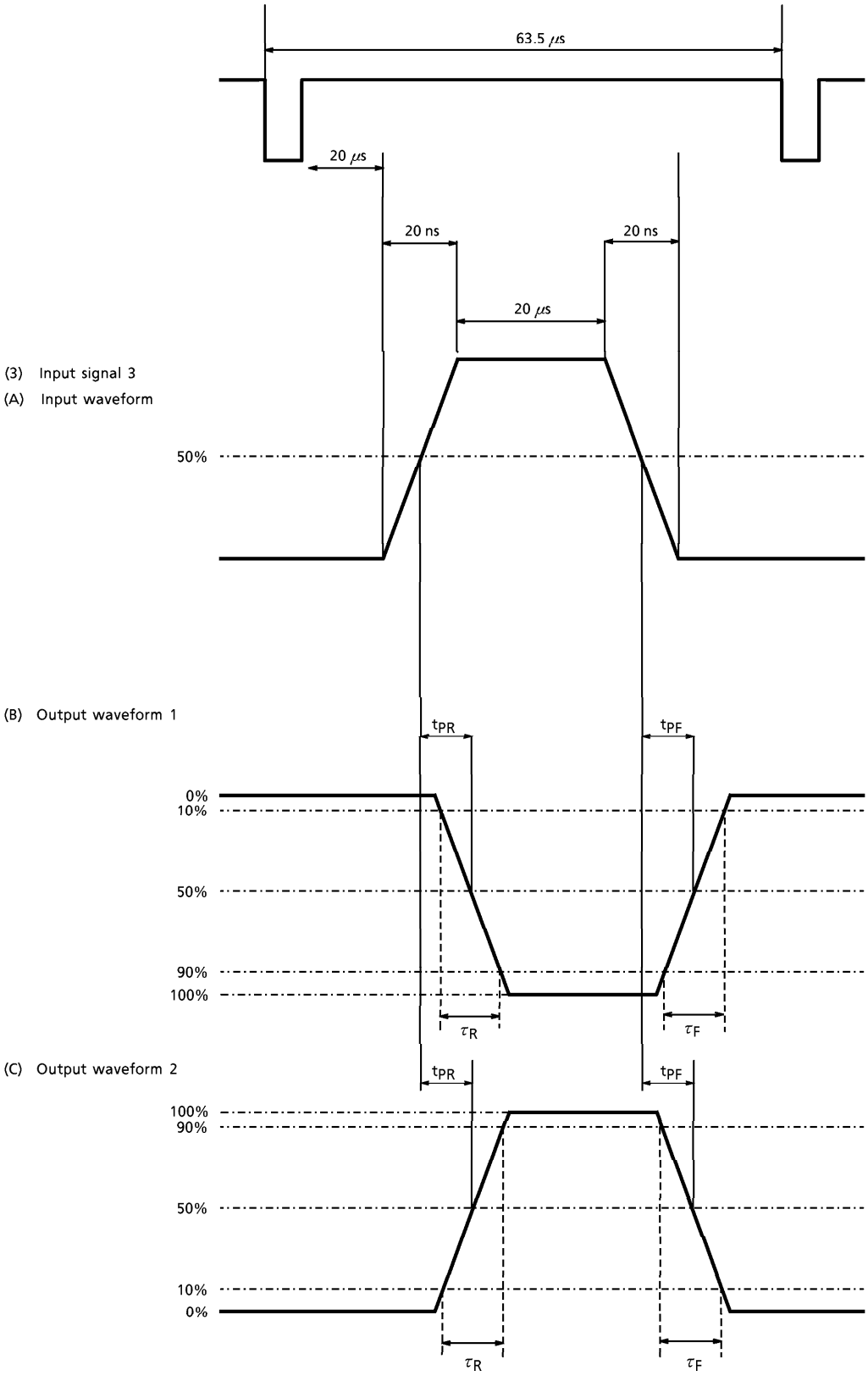

Fig.T-2 Test pulses for TA1310N text stage

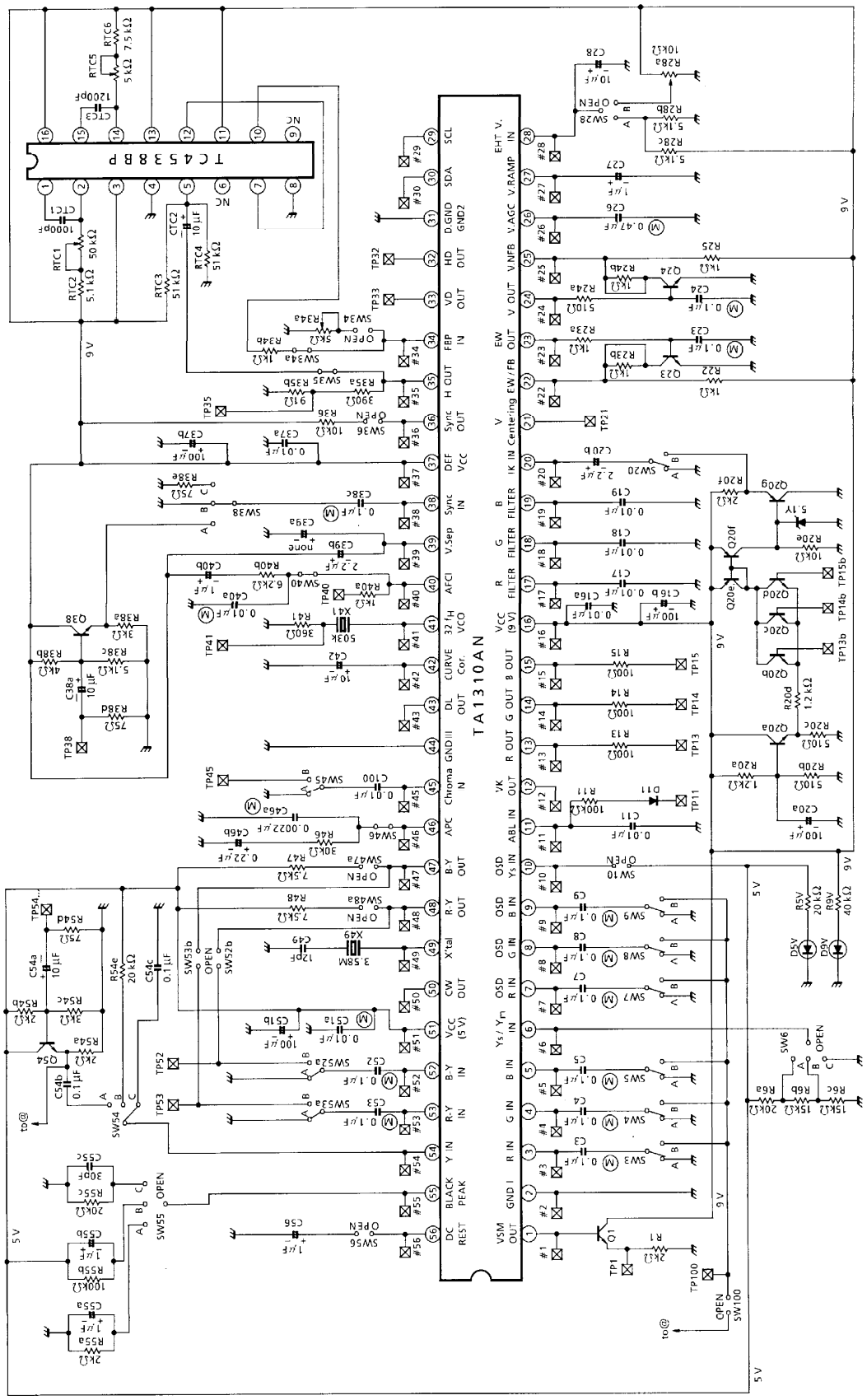

TEST CIRCUIT
DC

TA1310AN−97

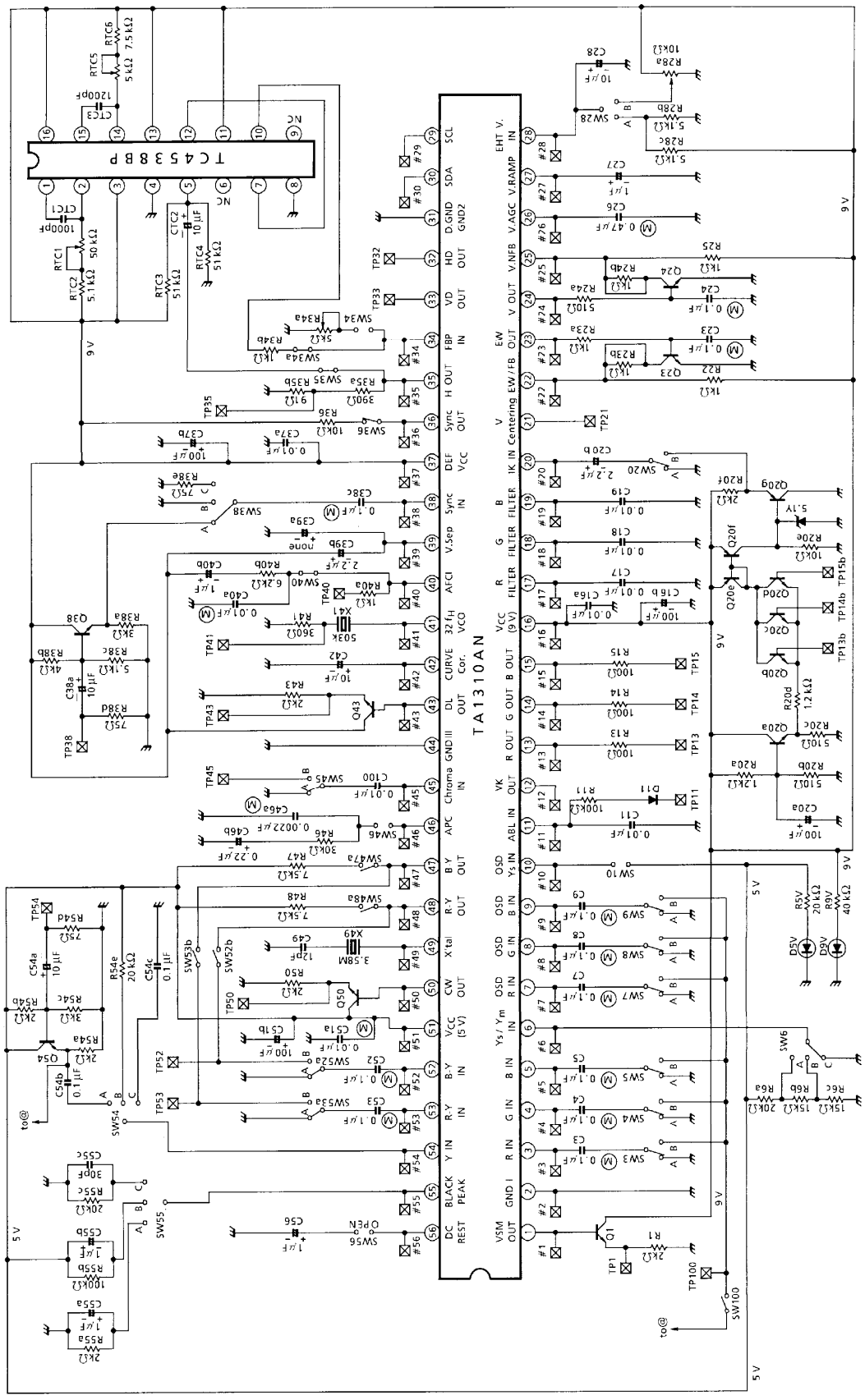

TEST CIRCUIT
AC characteristics for picture sharpness stage

TA1310AN−98

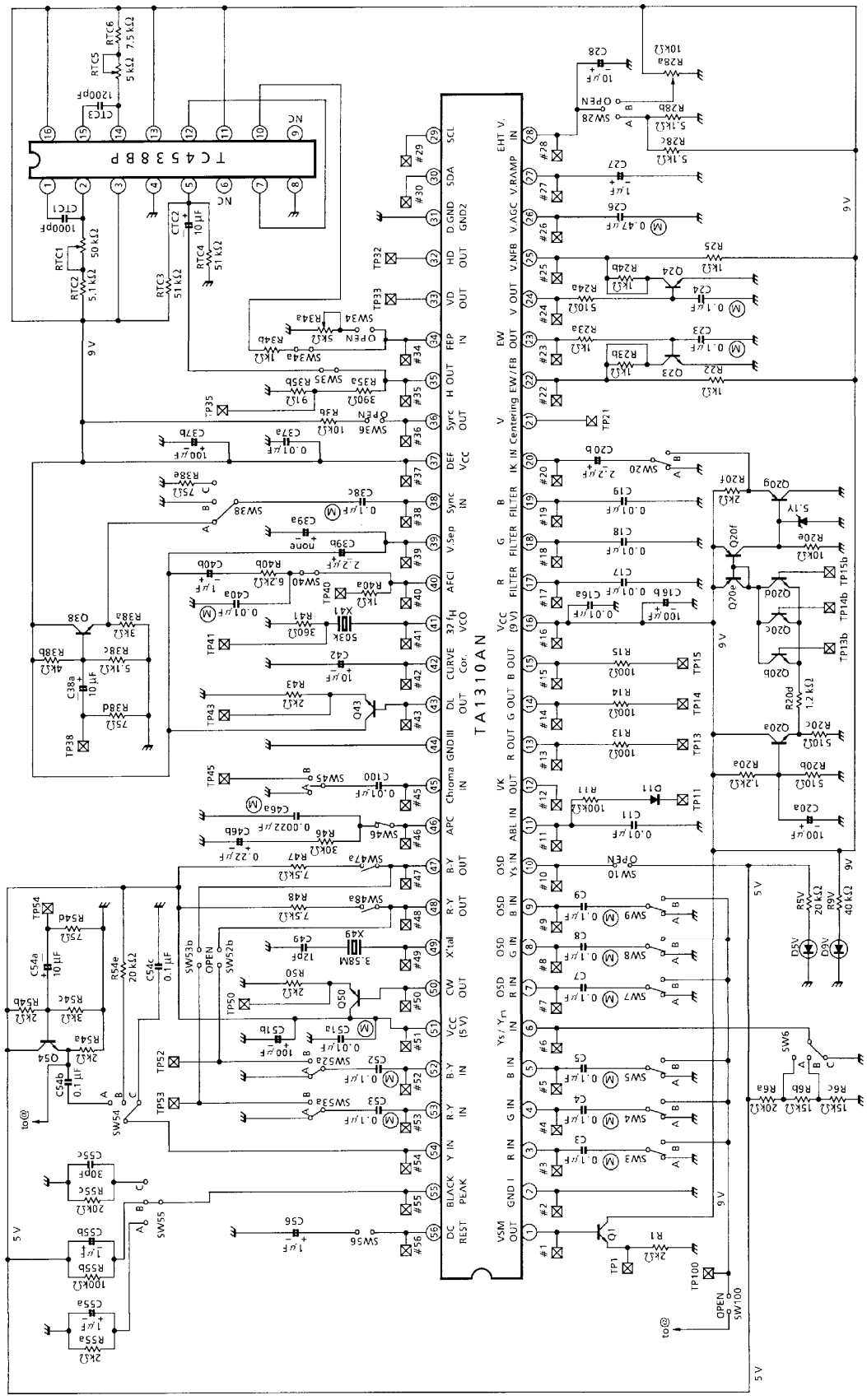

TEST CIRCUIT
Chroma stage

TA1310AN−99

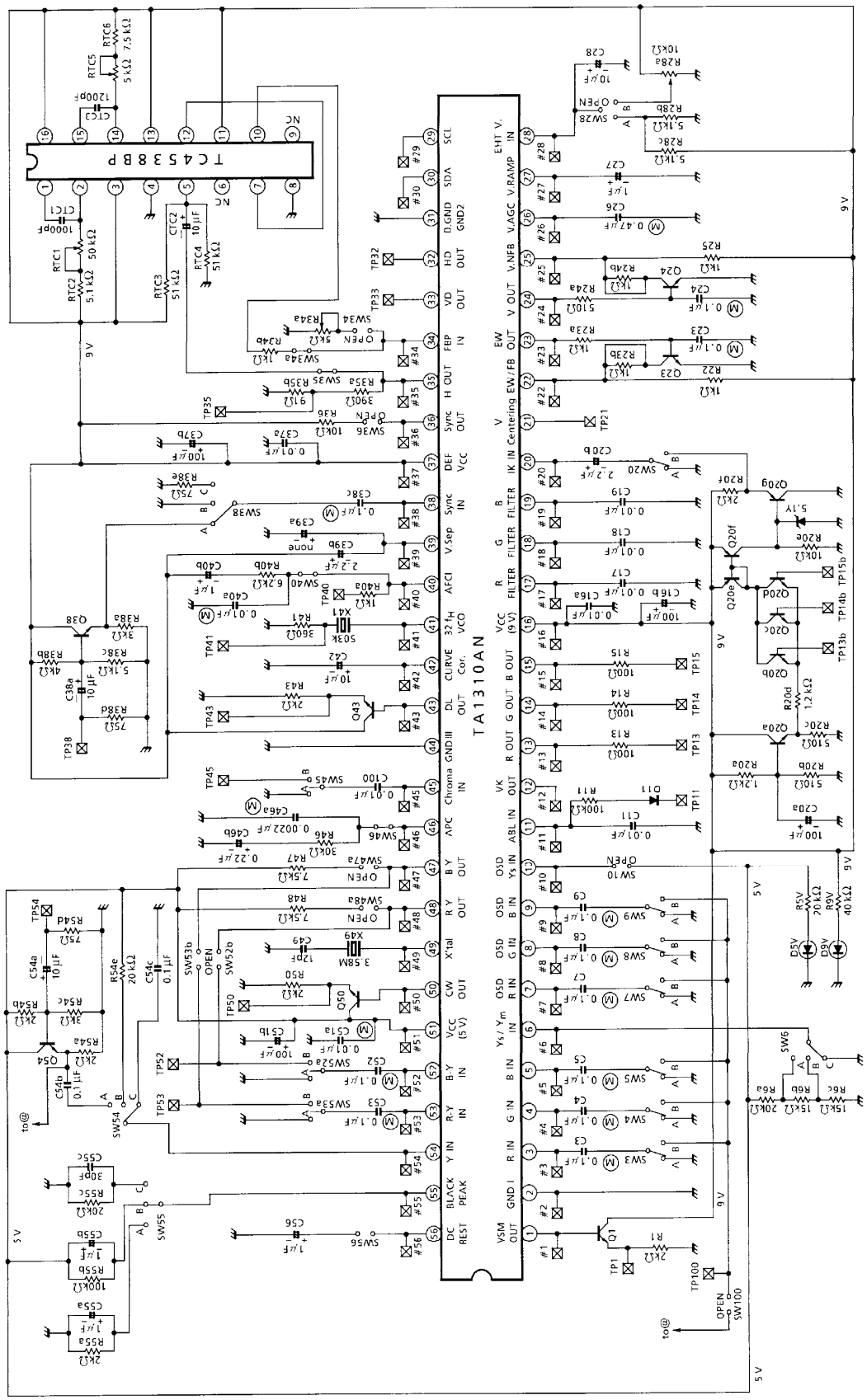

TEST CIRCUIT
Color difference stage

TA1310AN−100

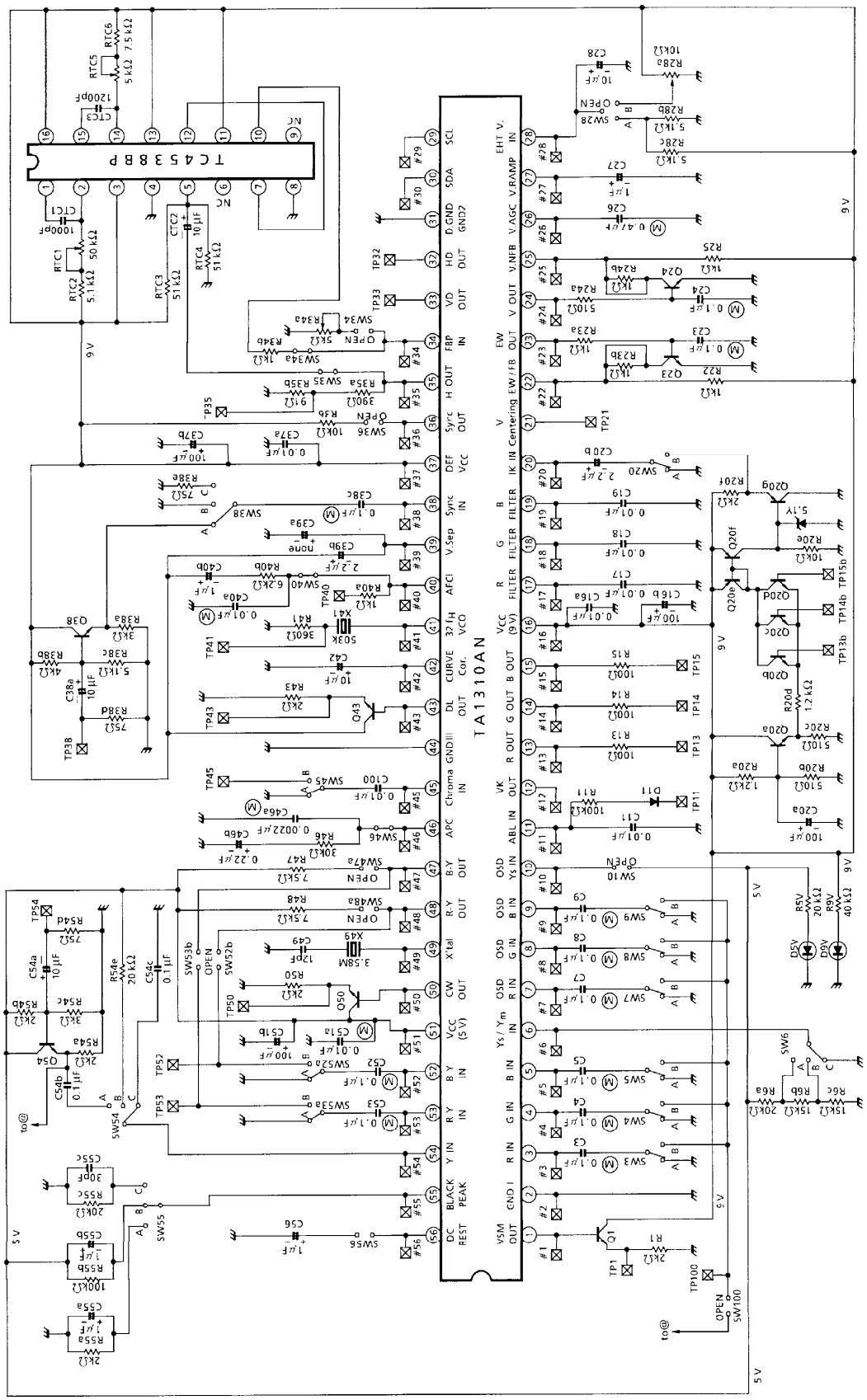

TEST CIRCUIT
Y stage

TA1310AN−101

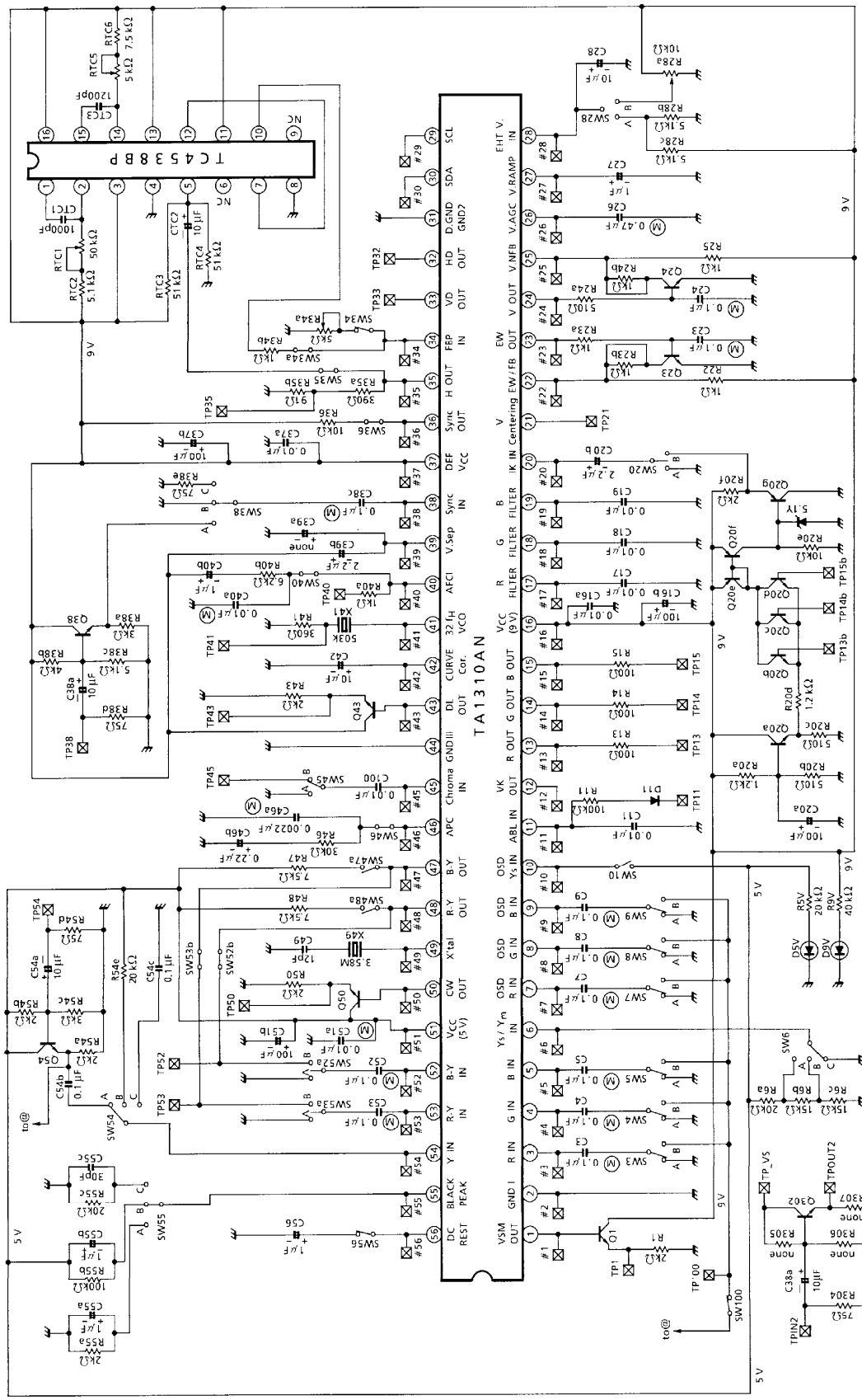

TEST CIRCUIT
Deflection stage and deflection correction stage

TA1310AN−102

APPLICATION CIRCUIT

(Note 1) : Be sure to design the power supply so that when the power is Off, DEF V_{CC} is below 1.9 V.

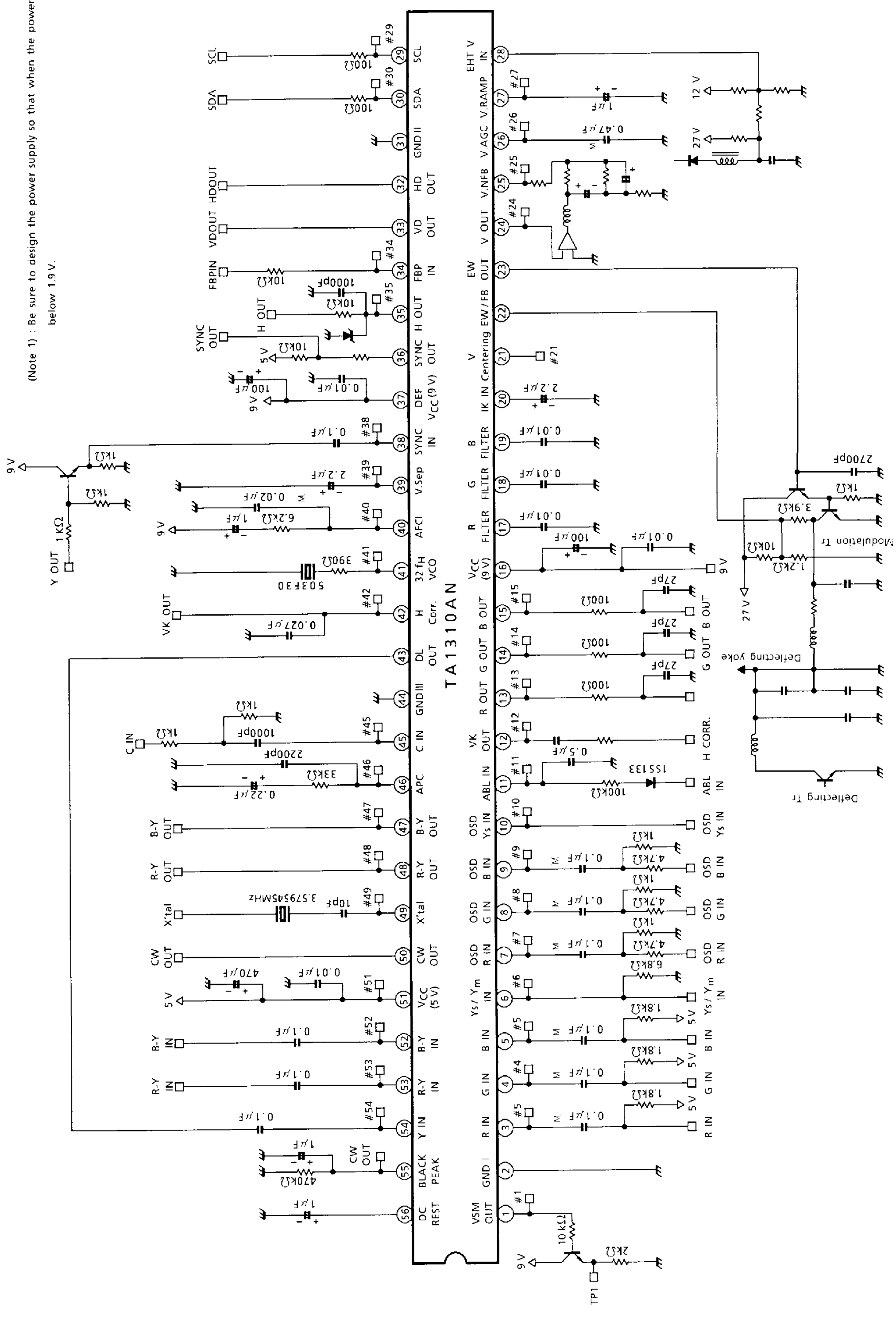

TA1310AN—103

PACKAGE DIMENSIONS

SDIP56-P-600-1.78

Unit : mm

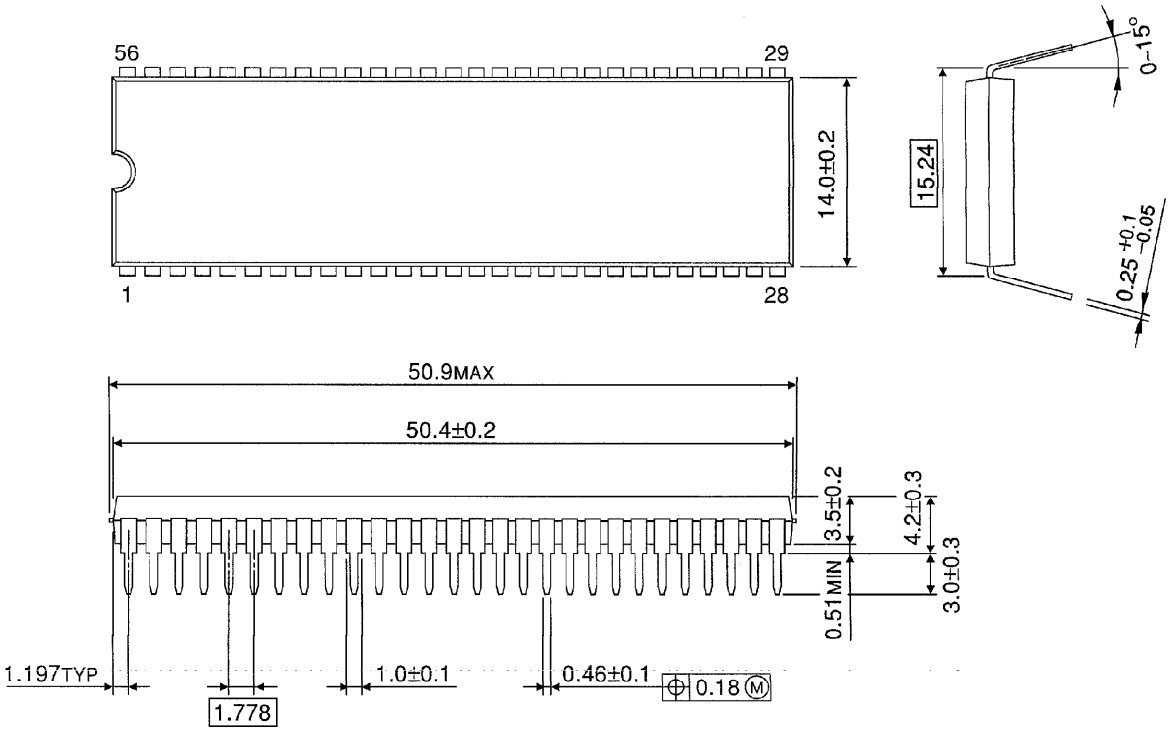

Weight : 5.55 g (Typ.)