SYNCHRONOUS DRAM

MT48LC16M4A2 - 4 Meg x 4 x 4 banks
MT48LC8M8A2 - 2 Meg x 8 x 4 banks
MT48LC4M16A2 - 1 Meg x 16 x 4 banks

For the latest data sheet, please refer to the Micron Web site: www.micron.com/mti/msp/html/datasheet.html

FEATURES

- PC66-, PC100- and PC133-compliant
- 143 MHz, graphical 4 Meg x 16 option
- Fully synchronous; all signals registered on positive edge of system clock
- Internal pipelined operation; column address can be changed every clock cycle
- Internal banks for hiding row access/precharge
- Programmable burst lengths: 1, 2, 4, 8 or full page
- Auto Precharge, includes CONCURRENT AUTO PRECHARGE, and Auto Refresh Modes
- Self Refresh Modes: standard and low power
- 64ms, 4,096-cycle refresh
- LVTTL-compatible inputs and outputs
- Single +3.3V ±0.3V power supply

OPTIONS — MARKING

- Configurations
  - 16 Meg x 4 (4 Meg x 4 x 4 banks) — 16M4
  - 8 Meg x 8 (2 Meg x 8 x 4 banks) — 8M8
  - 4 Meg x 16 (1 Meg x 16 x 4 banks) — 4M16
- WRITE Recovery (^{t}WR)
  - ^{t}WR = "2 CLK"[1] — A2
- Plastic Package - OCPL[2]
  - 54-pin TSOP II (400 mil) — TG
- Timing (Cycle Time)
  - 10ns @ CL2 (PC100) — -8E
  - 7.5ns @ CL3 (PC133) — -75
  - 7.5ns @ CL2 (PC133) — -7E
  - 7ns @ CL3 (143 MHz) — -7G[3]
- Self Refresh
  - Standard — None
  - Low Power — L
- Operating Temperature Range
  - Commercial (0°C to +70°C) — None
  - Extended (-40°C to +85°C) — IT[4]

Part Number Example:

MT48LC8M8A2TG-8E

NOTE: 1. Refer to Micron Technical Note TN-48-05.
2. Off-center parting line.
3. Available on 4 Meg x 16.
4. Available on x8, x16, -8E.

PIN ASSIGNMENT (Top View)

54-Pin TSOP

x4	x8	x16	Pin	Pin	x16	x8	x4
-	-	VDD	1 •	54	VSS	-	-
NC	DQ0	DQ0	2	53	DQ15	DQ7	NC
-	-	VDDQ	3	52	VSSQ	-	-
NC	NC	DQ1	4	51	DQ14	NC	NC
DQ0	DQ1	DQ2	5	50	DQ13	DQ6	DQ3
-	-	VSSQ	6	49	VDDQ	-	-
NC	NC	DQ3	7	48	DQ12	NC	NC
NC	DQ2	DQ4	8	47	DQ11	DQ5	NC
-	-	VDDQ	9	46	VSSQ	-	-
NC	NC	DQ5	10	45	DQ10	NC	NC
DQ1	DQ3	DQ6	11	44	DQ9	DQ4	DQ2
-	-	VSSQ	12	43	VDDQ	-	-
NC	NC	DQ7	13	42	DQ8	NC	NC
-	-	VDD	14	41	VSS	-	-
NC	NC	DQML	15	40	NC	-	-
-	-	WE#	16	39	DQMH	DQM	DQM
-	-	CAS#	17	38	CLK	-	-
-	-	RAS#	18	37	CKE	-	-
-	-	CS#	19	36	NC	-	-
-	-	BA0	20	35	A11	-	-
-	-	BA1	21	34	A9	-	-
-	-	A10	22	33	A8	-	-
-	-	A0	23	32	A7	-	-
-	-	A1	24	31	A6	-	-
-	-	A2	25	30	A5	-	-
-	-	A3	26	29	A4	-	-
-	-	VDD	27	28	VSS	-	-

Note: The # symbol indicates signal is active LOW. A dash (–) indicates x8 and x4 pin function is same as x16 pin function.

	16 Meg x 4	8 Meg x 8	4 Meg x 16
Configuration	4 Meg x 4 x 4 banks	2 Meg x 8 x 4 banks	1 Meg x 16 x 4 banks
Refresh Count	4K	4K	4K
Row Addressing	4K (A0-A11)	4K (A0-A11)	4K (A0-A11)
Bank Addressing	4 (BA0, BA1)	4 (BA0, BA1)	4 (BA0, BA1)
Column Addressing	1K (A0-A9)	512 (A0-A8)	256 (A0-A7)

KEY TIMING PARAMETERS

SPEED GRADE	CLOCK FREQUENCY	ACCESS TIME CL = 2*	ACCESS TIME CL = 3*	SETUP TIME	HOLD TIME
-7G	143 MHz	–	6ns	2ns	1ns
-7E	143 MHz	–	5.4ns	1.5ns	0.8ns
-75	133 MHz	–	5.4ns	1.5ns	0.8ns
-8E	125 MHz	–	6ns	2ns	1ns
-7E	133 MHz	5.4ns	–	1.5ns	0.8ns
-75	100 MHz	6ns	–	1.5ns	0.8ns
-8E	100 MHz	6ns	–	2ns	1ns

* CL = CAS (READ) latency

Micron Technology, Inc., reserves the right to change products or specifications without notice.
©1999, Micron Technology, Inc.

64Mb SDRAM PART NUMBERS

PART NUMBER	ARCHITECTURE
MT48LC16M4A2TG	16 Meg x 4
MT48LC8M8A2TG	8 Meg x 8
MT48LC4M16A2TG	4 Meg x 16

GENERAL DESCRIPTION

The 64Mb SDRAM is a high-speed CMOS, dynamic random-access memory containing 67,108,864 bits. It is internally configured as a quad-bank DRAM with a synchronous interface (all signals are registered on the positive edge of the clock signal, CLK). Each of the x4's 16,777,216-bit banks is organized as 4,096 rows by 1,024 columns by 4 bits. Each of the x8's 16,777,216-bit banks is organized as 4,096 rows by 512 columns by 8 bits. Each of the x16's 16,777,216-bit banks is organized as 4,096 rows by 256 columns by 16 bits.

Read and write accesses to the SDRAM are burst oriented; accesses start at a selected location and continue for a programmed number of locations in a programmed sequence. Accesses begin with the registration of an ACTIVE command, which is then followed by a READ or WRITE command. The address bits registered coincident with the ACTIVE command are used to select the bank and row to be accessed (BA0, BA1 select the bank; A0-A11 select the row). The address bits registered coincident with the READ or WRITE command are used to select the starting column location for the burst access.

The SDRAM provides for programmable READ or WRITE burst lengths of 1, 2, 4 or 8 locations, or the full page, with a burst terminate option. An auto precharge function may be enabled to provide a self-timed row precharge that is initiated at the end of the burst sequence.

The 64Mb SDRAM uses an internal pipelined architecture to achieve high-speed operation. This architecture is compatible with the 2*n* rule of prefetch architectures, but it also allows the column address to be changed on every clock cycle to achieve a high-speed, fully random access. Precharging one bank while accessing one of the other three banks will hide the precharge cycles and provide seamless, high-speed, random-access operation.

The 64Mb SDRAM is designed to operate in 3.3V memory systems. An auto refresh mode is provided, along with a power-saving, power-down mode. All inputs and outputs are LVTTL-compatible.

SDRAMs offer substantial advances in DRAM operating performance, including the ability to synchronously burst data at a high data rate with automatic column-address generation, the ability to interleave between internal banks in order to hide precharge time and the capability to randomly change column addresses on each clock cycle during a burst access.

Micron Technology, Inc., reserves the right to change products or specifications without notice.
©1999, Micron Technology, Inc.

TABLE OF CONTENTS

Functional Block Diagram - 16 Meg x 4 4
Functional Block Diagram - 8 Meg x 8 5
Functional Block Diagram - 4 Meg x 16 6
Pin Descriptions 7

Functional Description 8
Initialization 8
Register Definition 8
Mode Register 8
Burst Length 8
Burst Type 9
CAS Latency 10
Operating Mode 10
Write Burst Mode 10
Commands 11
Truth Table 1 (Commands and DQM Operation) 11
Command Inhibit 12
No Operation (NOP) 12
Load Mode Register 12
Active 12
Read 12
Write 12
Precharge 12
Auto Precharge 12
Burst Terminate 12
Auto Refresh 13
Self Refresh 13
Operation 14
Bank/Row Activation 14
Reads 15
Writes 21
Precharge 23
Power-Down 23
Clock Suspend 24
Burst Read/Single Write 24
Concurrent Auto Precharge 25
Truth Table 2 (CKE) 27
Truth Table 3 (Current State, Same Bank) 28
Truth Table 4 (Current State, Different Bank) 30
Absolute Maximum Ratings 32
DC Electrical Characteristics and Operating Conditions 32
IDD Specifications and Conditions 32
Capacitance 33

Electrical Characteristics and Recommended Operating Conditions (Timing Table) 33

Timing Waveforms
Initialize and Load Mode Register 36
Power-Down Mode 37
Clock Suspend Mode 38
Auto Refresh Mode 39
Self Refresh Mode 40
Reads
Read - Without Auto Precharge 41
Read - With Auto Precharge 42
Single Read - Without Auto Precharge 43
Single Read - With Auto Precharge 44
Alternating Bank Read Accesses 45
Read - Full-Page Burst 46
Read - DQM Operation 47
Writes
Write - Without Auto Precharge 48
Write - With Auto Precharge 49
Single Write - Without Auto Precharge 50
Single Write - With Auto Precharge 51
Alternating Bank Write Accesses 52
Write - Full-Page Burst 53
Write - DQM Operation 54

Micron Technology, Inc., reserves the right to change products or specifications without notice.
©1999, Micron Technology, Inc.

FUNCTIONAL BLOCK DIAGRAM
16 Meg x 4 SDRAM

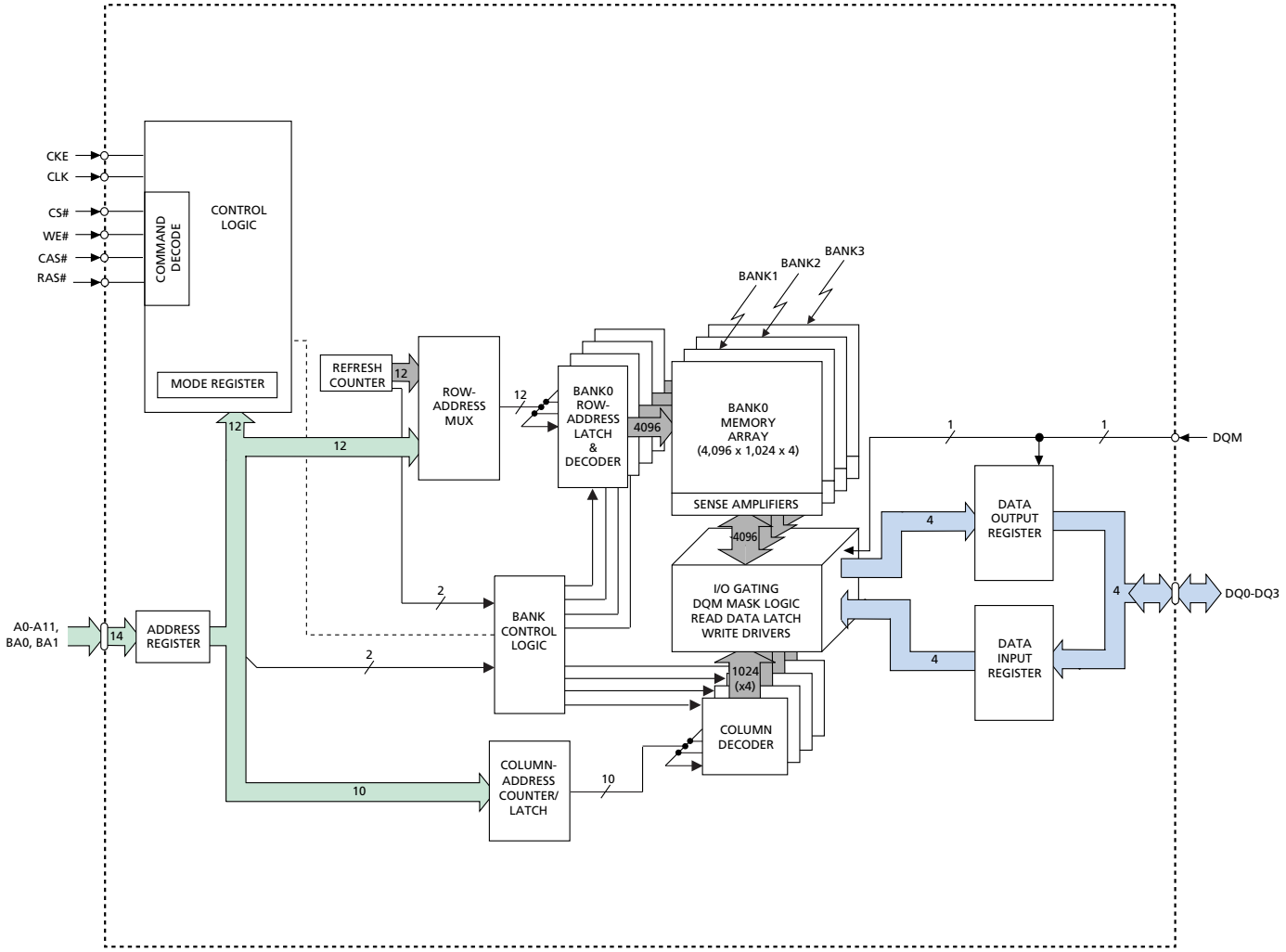

Micron Technology, Inc., reserves the right to change products or specifications without notice.
©1999, Micron Technology, Inc.

FUNCTIONAL BLOCK DIAGRAM
8 Meg x 8 SDRAM

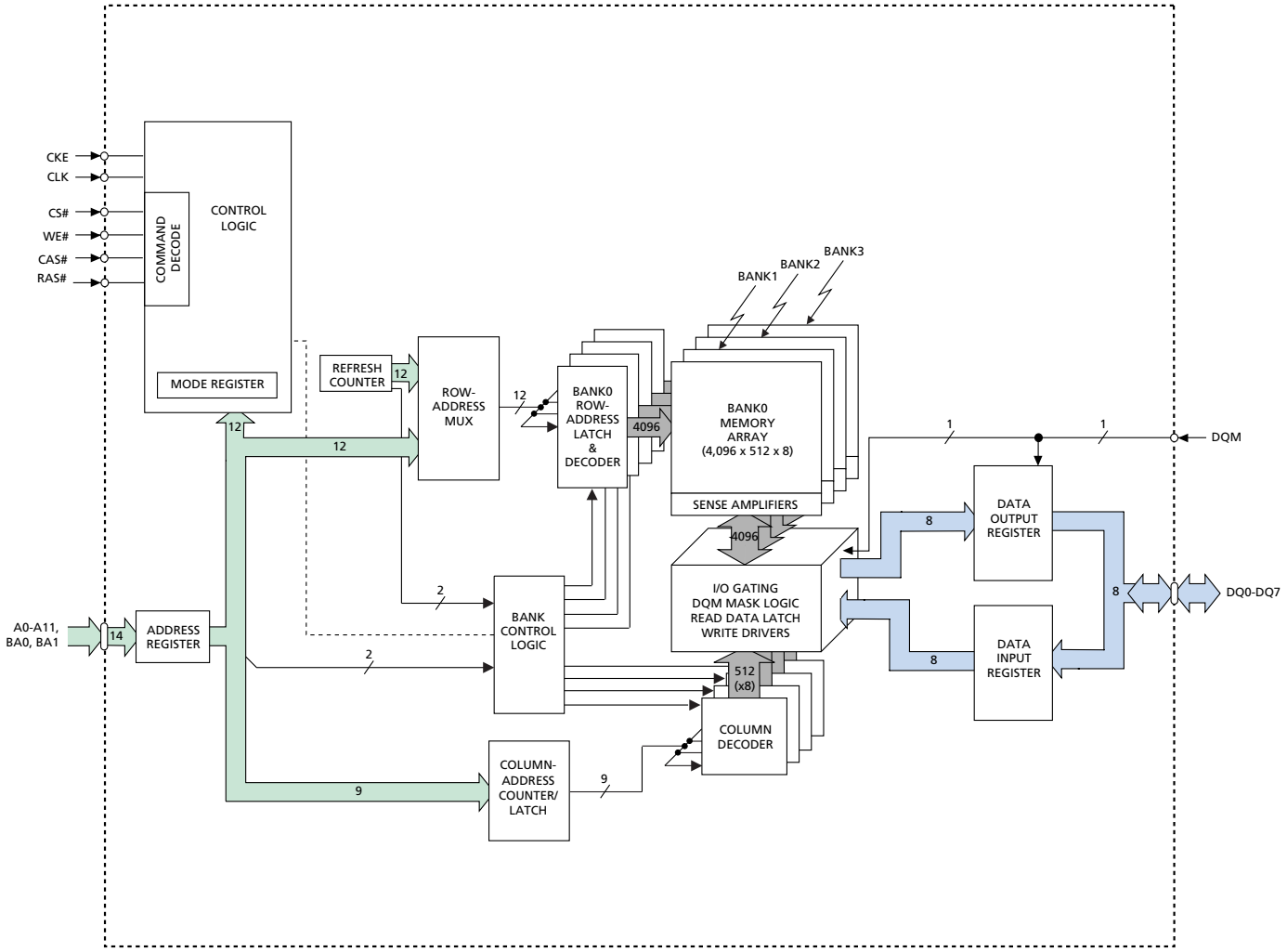

Micron Technology, Inc., reserves the right to change products or specifications without notice.
©1999, Micron Technology, Inc.

FUNCTIONAL BLOCK DIAGRAM
4 Meg x 16 SDRAM

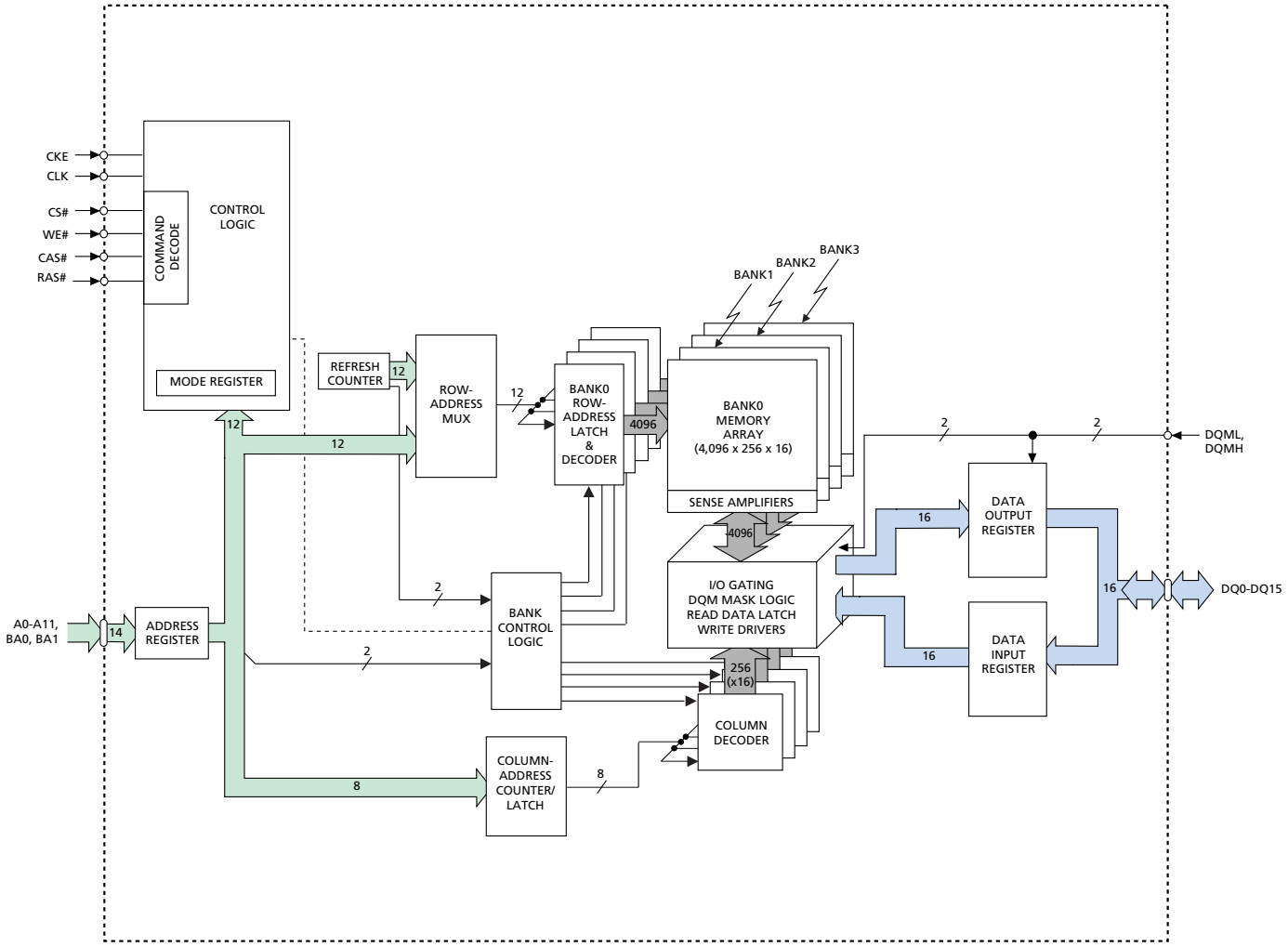

Micron Technology, Inc., reserves the right to change products or specifications without notice.
©1999, Micron Technology, Inc.

PIN DESCRIPTIONS

PIN NUMBERS	SYMBOL	TYPE	DESCRIPTION
38	CLK	Input	Clock: CLK is driven by the system clock. All SDRAM input signals are sampled on the positive edge of CLK. CLK also increments the internal burst counter and controls the output registers.
37	CKE	Input	Clock Enable: CKE activates (HIGH) and deactivates (LOW) the CLK signal. Deactivating the clock provides PRECHARGE POWER-DOWN and SELF REFRESH operation (all banks idle), ACTIVE POWER-DOWN (row active in any bank) or CLOCK SUSPEND operation (burst/access in progress). CKE is synchronous except after the device enters power-down and self refresh modes, where CKE becomes asynchronous until after exiting the same mode. The input buffers, including CLK, are disabled during power-down and self refresh modes, providing low standby power. CKE may be tied HIGH.
19	CS#	Input	Chip Select: CS# enables (registered LOW) and disables (registered HIGH) the command decoder. All commands are masked when CS# is registered HIGH. CS# provides for external bank selection on systems with multiple banks. CS# is considered part of the command code.
16, 17, 18	WE#, CAS#, RAS#	Input	Command Inputs: WE#, CAS# and RAS# (along with CS#) define the command being entered.
39	x4, x8: DQM	Input	Input/Output Mask: DQM is an input mask signal for write accesses and an output enable signal for read accesses. Input data is masked when DQM is sampled HIGH during a WRITE cycle. The output buffers are placed in a High-Z state (two-clock latency) when DQM is sampled HIGH during a READ cycle. On the x4 and x8, DQML (Pin 15) is a NC and DQMH is DQM. On the x16, DQML corresponds to DQ0-DQ7 and DQMH corresponds to DQ8-DQ15. DQML and DQMH are considered same state when referenced as DQM.
15, 39	x16: DQML, DQMH		
20, 21	BA0, BA1	Input	Bank Address Inputs: BA0 and BA1 define to which bank the ACTIVE, READ, WRITE or PRECHARGE command is being applied.
23-26, 29-34, 22, 35	A0-A11	Input	Address Inputs: A0-A11 are sampled during the ACTIVE command (row-address A0-A11) and READ/WRITE command (column-address A0-A9 [x4]; A0-A8 [x8]; A0-A7 [x16]; with A10 defining auto precharge) to select one location out of the memory array in the respective bank. A10 is sampled during a PRECHARGE command to determine if all banks are to be precharged (A10 HIGH) or bank selected by BA0, BA1 (LOW). The address inputs also provide the op-code during a LOAD MODE REGISTER command.
2, 4, 5, 7, 8, 10, 11, 13, 42, 44, 45, 47, 48, 50, 51, 53	DQ0-DQ15	x16: I/O	Data Input/Output: Data bus for x16 (4, 7, 10, 13, 42, 45, 48, 51 are NCs for x8; and 2, 4, 7, 8, 10, 13, 42, 45, 47, 48, 51, 53 are NCs for x4).
2, 5, 8, 11, 44, 47, 50, 53	DQ0-DQ7	x8: I/O	Data Input/Output: Data bus for x8 (2, 8, 47, 53 are NCs for x4).
5, 11, 44, 50	DQ0-DQ3	x4: I/O	Data Input/Output: Data bus for x4.
36, 40	NC	–	No Connect: These pins should be left unconnected.
3, 9, 43, 49	$V_{DD}Q$	Supply	DQ Power: Isolated DQ power on the die for improved noise immunity.
6, 12, 46, 52	$V_{SS}Q$	Supply	DQ Ground: Isolated DQ ground on the die for improved noise immunity.
1, 14, 27	V_{DD}	Supply	Power Supply: +3.3V ±0.3V.
28, 41, 54	V_{SS}	Supply	Ground.

Micron Technology, Inc., reserves the right to change products or specifications without notice.
©1999, Micron Technology, Inc.

FUNCTIONAL DESCRIPTION

In general, the 64Mb SDRAMs (4 Meg x 4 x 4 banks, 2 Meg x 8 x 4 banks and 1 Meg x 16 x 4 banks) are quad-bank DRAMs which operate at 3.3V and include a synchronous interface (all signals are registered on the positive edge of the clock signal, CLK). Each of the x4's 16,777,216-bit banks is organized as 4,096 rows by 1,024 columns by 4 bits. Each of the x8's 16,777,216-bit banks is organized as 4,096 rows by 512 columns by 8 bits. Each of the x16's 16,777,216-bit banks is organized as 4,096 rows by 256 columns by 16 bits.

Read and write accesses to the SDRAM are burst oriented; accesses start at a selected location and continue for a programmed number of locations in a programmed sequence. Accesses begin with the registration of an ACTIVE command which is then followed by a READ or WRITE command. The address bits registered coincident with the ACTIVE command are used to select the bank and row to be accessed (BA0 and BA1 select the bank, A0-A11 select the row). The address bits (x4: A0-A9; x8: A0-A8; x16: A0-A7) registered coincident with the READ or WRITE command are used to select the starting column location for the burst access.

Prior to normal operation, the SDRAM must be initialized. The following sections provide detailed information covering device initialization, register definition, command descriptions and device operation.

Initialization

SDRAMs must be powered up and initialized in a predefined manner. Operational procedures other than those specified may result in undefined operation. Once power is applied to V_{DD} and $V_{DD}Q$ (simultaneously) and the clock is stable (stable clock is defined as a signal cycling within timing constraints specified for the clock pin), the SDRAM requires a 100µs delay prior to issuing any command other than a COMMAND INHIBIT or a NOP. Starting at some point during this 100µs period and continuing at least through the end of this period, COMMAND INHIBIT or NOP commands should be applied.

Once the 100µs delay has been satisfied with at least one COMMAND INHIBIT or NOP command having been applied, a PRECHARGE command should be applied. All banks must be precharged, thereby placing the device in the all banks idle state.

Once in the idle state, two AUTO REFRESH cycles must be performed. After the AUTO REFRESH cycles are complete, the SDRAM is ready for mode register programming. Because the mode register will power up in an unknown state, it should be loaded prior to applying any operational command.

Register Definition

MODE REGISTER

The mode register is used to define the specific mode of operation of the SDRAM. This definition includes the selection of a burst length, a burst type, a CAS latency, an operating mode and a write burst mode, as shown in Figure 1. The mode register is programmed via the LOAD MODE REGISTER command and will retain the stored information until it is programmed again or the device loses power.

Mode register bits M0-M2 specify the burst length, M3 specifies the type of burst (sequential or interleaved), M4-M6 specify the CAS latency, M7 and M8 specify the operating mode, M9 specifies the WRITE burst mode, and M10 and M11 are reserved for future use.

The mode register must be loaded when all banks are idle, and the controller must wait the specified time before initiating the subsequent operation. Violating either of these requirements will result in unspecified operation.

Burst Length

Read and write accesses to the SDRAM are burst oriented, with the burst length being programmable, as shown in Figure 1. The burst length determines the maximum number of column locations that can be accessed for a given READ or WRITE command. Burst lengths of 1, 2, 4 or 8 locations are available for both the sequential and the interleaved burst types, and a full-page burst is available for the sequential type. The full-page burst is used in conjunction with the BURST TERMINATE command to generate arbitrary burst lengths.

Reserved states should not be used, as unknown operation or incompatibility with future versions may result.

When a READ or WRITE command is issued, a block of columns equal to the burst length is effectively selected. All accesses for that burst take place within this block, meaning that the burst will wrap within the block if a boundary is reached. The block is uniquely selected by A1-A9 (x4), A1-A8 (x8) or A1-A7 (x16) when the burst length is set to two; by A2-A9 (x4), A2-A8 (x8) or A2-A7 (x16) when the burst length is set to four; and by A3-A9 (x4), A3-A8 (x8) or A3-A7 (x16) when the burst length is set to eight. The remaining (least significant) address bit(s) is (are) used to select the starting location within the block. Full-page bursts wrap within the page if the boundary is reached.

Micron Technology, Inc., reserves the right to change products or specifications without notice.
©1999, Micron Technology, Inc.

Burst Type

Accesses within a given burst may be programmed to be either sequential or interleaved; this is referred to as the burst type and is selected via bit M3.

The ordering of accesses within a burst is determined by the burst length, the burst type and the starting column address, as shown in Table 1.

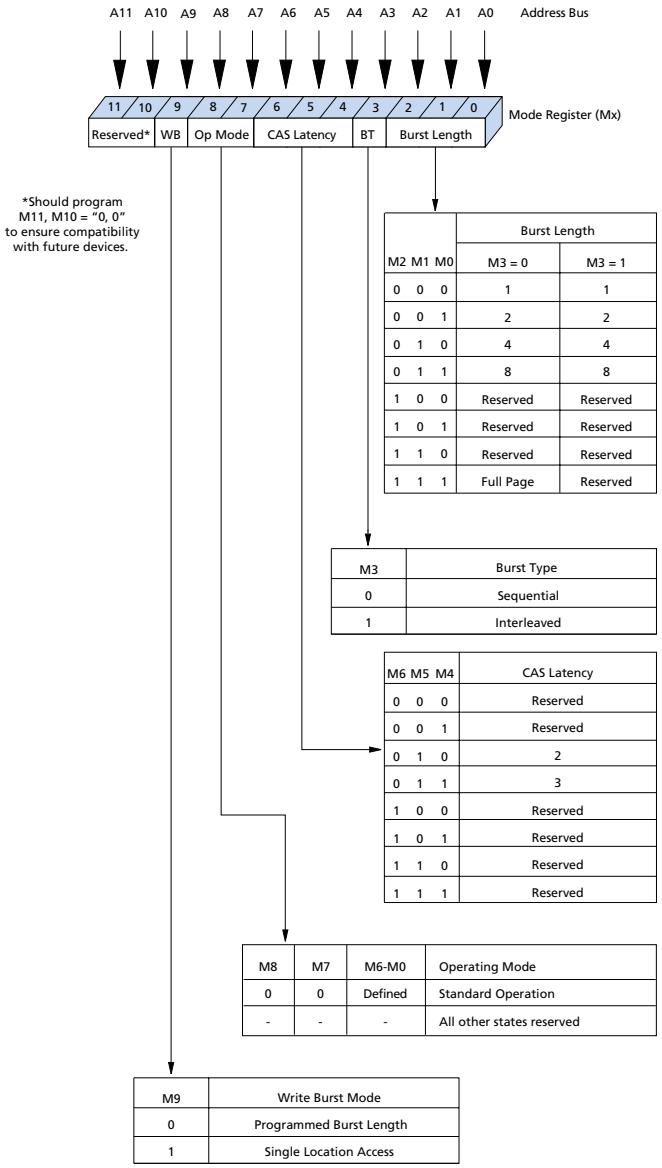

Figure 1
Mode Register Definition

Table 1
Burst Definition

Burst Length	Starting Column Address	Order of Accesses Within a Burst: Type = Sequential	Order of Accesses Within a Burst: Type = Interleaved
2	**A0**		
	0	0-1	0-1
	1	1-0	1-0
4	**A1 A0**		
	0 0	0-1-2-3	0-1-2-3
	0 1	1-2-3-0	1-0-3-2
	1 0	2-3-0-1	2-3-0-1
	1 1	3-0-1-2	3-2-1-0
8	**A2 A1 A0**		
	0 0 0	0-1-2-3-4-5-6-7	0-1-2-3-4-5-6-7
	0 0 1	1-2-3-4-5-6-7-0	1-0-3-2-5-4-7-6
	0 1 0	2-3-4-5-6-7-0-1	2-3-0-1-6-7-4-5
	0 1 1	3-4-5-6-7-0-1-2	3-2-1-0-7-6-5-4
	1 0 0	4-5-6-7-0-1-2-3	4-5-6-7-0-1-2-3
	1 0 1	5-6-7-0-1-2-3-4	5-4-7-6-1-0-3-2
	1 1 0	6-7-0-1-2-3-4-5	6-7-4-5-2-3-0-1
	1 1 1	7-0-1-2-3-4-5-6	7-6-5-4-3-2-1-0
Full Page (y)	n = A0-A9/8/7 (location 0-y)	Cn, Cn + 1, Cn + 2 Cn + 3, Cn + 4... …Cn - 1, Cn…	Not Supported

NOTE:
1. For full-page accesses: y = 1,024 (x4); y = 512 (x8); y = 256 (x16).
2. For a burst length of two, A1-A9 (x4), A1-A8 (x8), or A1-A7 (x16) select the block-of-two burst; A0 selects the starting column within the block.
3. For a burst length of four, A2-A9 (x4), A2-A8 (x8), or A2-A7 (x16) select the block-of-four burst; A0-A1 select the starting column within the block.
4. For a burst length of eight, A3-A9 (x4), A3-A8 (x8), or A3-A7 (x16) select the block-of-eight burst; A0-A2 select the starting column within the block.
5. For a full-page burst, the full row is selected and A0-A9 (x4), A0-A8 (x8), or A0-A7 (x16) select the starting column.
6. Whenever a boundary of the block is reached within a given sequence above, the following access wraps within the block.
7. For a burst length of one, A0-A9 (x4), A0-A8 (x8), or A0-A7 (x16) select the unique column to be accessed, and mode register bit M3 is ignored.

Micron Technology, Inc., reserves the right to change products or specifications without notice.
©1999, Micron Technology, Inc.

CAS Latency

The CAS latency is the delay, in clock cycles, between the registration of a READ command and the availability of the first piece of output data. The latency can be set to two or three clocks.

If a READ command is registered at clock edge *n*, and the latency is *m* clocks, the data will be available by clock edge *n* + *m*. The DQs will start driving as a result of the clock edge one cycle earlier (*n* + *m* - 1), and provided that the relevant access times are met, the data will be valid by clock edge *n* + *m*. For example, assuming that the clock cycle time is such that all relevant access times are met, if a READ command is registered at T0 and the latency is programmed to two clocks, the DQs will start driving after T1 and the data will be valid by T2, as shown in Figure 2. Table 2 indicates the operating frequencies at which each CAS latency setting can be used.

Reserved states should not be used as unknown operation or incompatibility with future versions may result.

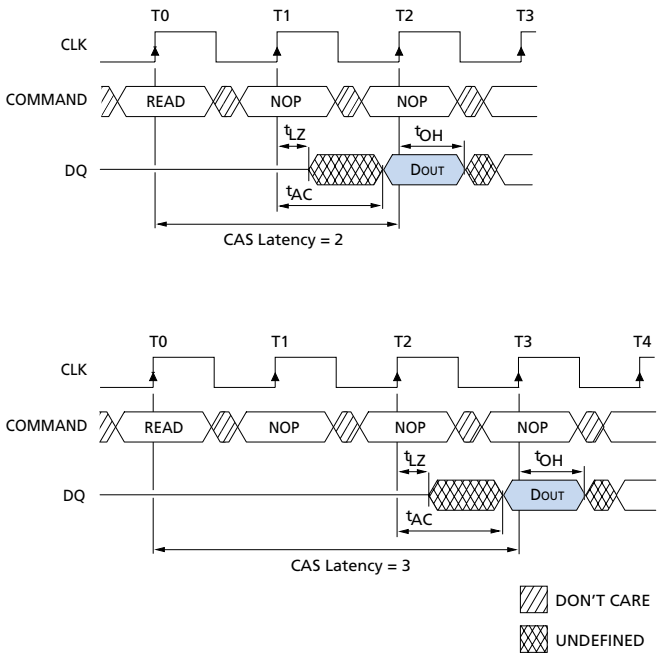

Figure 2
CAS Latency

Operating Mode

The normal operating mode is selected by setting M7 and M8 to zero; the other combinations of values for M7 and M8 are reserved for future use and/or test modes. The programmed burst length applies to both READ and WRITE bursts.

Test modes and reserved states should not be used because unknown operation or incompatibility with future versions may result.

Write Burst Mode

When M9 = 0, the burst length programmed via M0-M2 applies to both READ and WRITE bursts; when M9 = 1, the programmed burst length applies to READ bursts, but write accesses are single-location (nonburst) accesses.

Table 2
CAS Latency

SPEED	ALLOWABLE OPERATING FREQUENCY (MHz)	
	CAS LATENCY = 2	CAS LATENCY = 3
-7G	–	≤ 143
-7E	≤ 133	≤ 143
-75	≤ 100	≤ 133
-8E	≤ 100	≤ 125

Micron Technology, Inc., reserves the right to change products or specifications without notice.
©1999, Micron Technology, Inc.

Commands

Truth Table 1 provides a quick reference of available commands. This is followed by a written description of each command. Three additional Truth Tables appear following the Operation section; these tables provide current state/next state information.

TRUTH TABLE 1 – COMMANDS AND DQM OPERATION

(Notes: 1)

NAME (FUNCTION)	CS#	RAS#	CAS#	WE#	DQM	ADDR	DQs	NOTES
COMMAND INHIBIT (NOP)	H	X	X	X	X	X	X	
NO OPERATION (NOP)	L	H	H	H	X	X	X	
ACTIVE (Select bank and activate row)	L	L	H	H	X	Bank/Row	X	3
READ (Select bank and column, and start READ burst)	L	H	L	H	L/H[8]	Bank/Col	X	4
WRITE (Select bank and column, and start WRITE burst)	L	H	L	L	L/H[8]	Bank/Col	Valid	4
BURST TERMINATE	L	H	H	L	X	X	Active	
PRECHARGE (Deactivate row in bank or banks)	L	L	H	L	X	Code	X	5
AUTO REFRESH or SELF REFRESH (Enter self refresh mode)	L	L	L	H	X	X	X	6, 7
LOAD MODE REGISTER	L	L	L	L	X	Op-Code	X	2
Write Enable/Output Enable	–	–	–	–	L	–	Active	8
Write Inhibit/Output High-Z	–	–	–	–	H	–	High-Z	8

NOTE:
1. CKE is HIGH for all commands shown except SELF REFRESH.
2. A0-A11 define the op-code written to the mode register.
3. A0-A11 provide row address, and BA0, BA1 determine which bank is made active.
4. A0-A9 (x4), A0-A8 (x8), or A0-A7 (x16) provide column address; A10 HIGH enables the auto precharge feature (nonpersistent), while A10 LOW disables the auto precharge feature; BA0, BA1 determine which bank is being read from or written to.
5. A10 LOW: BA0, BA1 determine the bank being precharged. A10 HIGH: All banks precharged and BA0, BA1 are "Don't Care."
6. This command is AUTO REFRESH if CKE is HIGH, SELF REFRESH if CKE is LOW.
7. Internal refresh counter controls row addressing; all inputs and I/Os are "Don't Care" except for CKE.
8. Activates or deactivates the DQs during WRITEs (zero-clock delay) and READs (two-clock delay).

Micron Technology, Inc., reserves the right to change products or specifications without notice.
©1999, Micron Technology, Inc.

COMMAND INHIBIT

The COMMAND INHIBIT function prevents new commands from being executed by the SDRAM, regardless of whether the CLK signal is enabled. The SDRAM is effectively deselected. Operations already in progress are not affected.

NO OPERATION (NOP)

The NO OPERATION (NOP) command is used to perform a NOP to an SDRAM which is selected (CS# is LOW). This prevents unwanted commands from being registered during idle or wait states. Operations already in progress are not affected.

LOAD MODE REGISTER

The mode register is loaded via inputs A0-A11. See mode register heading in the Register Definition section. The LOAD MODE REGISTER command can only be issued when all banks are idle, and a subsequent executable command cannot be issued until ^{t}MRD is met.

ACTIVE

The ACTIVE command is used to open (or activate) a row in a particular bank for a subsequent access. The value on the BA0, BA1 inputs selects the bank, and the address provided on inputs A0-A11 selects the row. This row remains active (or open) for accesses until a PRECHARGE command is issued to that bank. A PRECHARGE command must be issued before opening a different row in the same bank.

READ

The READ command is used to initiate a burst read access to an active row. The value on the BA0, BA1 inputs selects the bank, and the address provided on inputs A0-A9 (x4), A0-A8 (x8), or A0-A7 (x16) selects the starting column location. The value on input A10 determines whether or not auto precharge is used. If auto precharge is selected, the row being accessed will be precharged at the end of the READ burst; if auto precharge is not selected, the row will remain open for subsequent accesses. Read data appears on the DQs subject to the logic level on the DQM inputs two clocks earlier. If a given DQM signal was registered HIGH, the corresponding DQs will be High-Z two clocks later; if the DQM signal was registered LOW, the DQs will provide valid data.

WRITE

The WRITE command is used to initiate a burst write access to an active row. The value on the BA0, BA1 inputs selects the bank, and the address provided on inputs A0-A9 (x4), A0-A8 (x8), or A0-A7 (x16) selects the starting column location. The value on input A10 determines whether or not auto precharge is used. If auto precharge is selected, the row being accessed will be precharged at the end of the WRITE burst; if auto precharge is not selected, the row will remain open for subsequent accesses. Input data appearing on the DQs is written to the memory array subject to the DQM input logic level appearing coincident with the data. If a given DQM signal is registered LOW, the corresponding data will be written to memory; if the DQM signal is registered HIGH, the corresponding data inputs will be ignored, and a WRITE will not be executed to that byte/column location.

PRECHARGE

The PRECHARGE command is used to deactivate the open row in a particular bank or the open row in all banks. The bank(s) will be available for a subsequent row access a specified time (^{t}RP) after the PRECHARGE command is issued. Input A10 determines whether one or all banks are to be precharged, and in the case where only one bank is to be precharged, inputs BA0, BA1 select the bank. Otherwise BA0, BA1 are treated as "Don't Care." Once a bank has been precharged, it is in the idle state and must be activated prior to any READ or WRITE commands being issued to that bank.

AUTO PRECHARGE

Auto precharge is a feature which performs the same individual-bank PRECHARGE function described above, without requiring an explicit command. This is accomplished by using A10 to enable auto precharge in conjunction with a specific READ or WRITE command. A precharge of the bank/row that is addressed with the READ or WRITE command is automatically performed upon completion of the READ or WRITE burst, except in the full-page burst mode, where auto precharge does not apply. Auto precharge is nonpersistent in that it is either enabled or disabled for each individual READ or WRITE command.

Auto precharge ensures that the precharge is initiated at the earliest valid stage within a burst. The user must not issue another command to the same bank until the precharge time (^{t}RP) is completed. This is determined as if an explicit PRECHARGE command was issued at the earliest possible time, as described for each burst type in the Operation section of this data sheet.

BURST TERMINATE

The BURST TERMINATE command is used to truncate either fixed-length or full-page bursts. The most recently registered READ or WRITE command prior to the BURST TERMINATE command will be truncated, as shown in the Operation section of this data sheet.

Micron Technology, Inc., reserves the right to change products or specifications without notice.
©1999, Micron Technology, Inc.

AUTO REFRESH

AUTO REFRESH is used during normal operation of the SDRAM and is analagous to CAS#-BEFORE-RAS# (CBR) REFRESH in conventional DRAMs. This command is nonpersistent, so it must be issued each time a refresh is required.

The addressing is generated by the internal refresh controller. This makes the address bits "Don't Care" during an AUTO REFRESH command. The 64Mb SDRAM requires 4,096 AUTO REFRESH cycles every 64ms (^{t}REF), regardless of width option. Providing a distributed AUTO REFRESH command every 15.625µs will meet the refresh requirement and ensure that each row is refreshed. Alternatively, 4,096 AUTO REFRESH commands can be issued in a burst at the minimum cycle rate (^{t}RC), once every 64ms.

SELF REFRESH

The SELF REFRESH command can be used to retain data in the SDRAM, even if the rest of the system is powered down. When in the self refresh mode, the SDRAM retains data without external clocking. The SELF REFRESH command is initiated like an AUTO REFRESH command except CKE is disabled (LOW). Once the SELF REFRESH command is registered, all the inputs to the SDRAM become "Don't Care," with the exception of CKE, which must remain LOW.

Once self refresh mode is engaged, the SDRAM provides its own internal clocking, causing it to perform its own AUTO REFRESH cycles. The SDRAM must remain in self refresh mode for a minimum period equal to ^{t}RAS and may remain in self refresh mode for an indefinite period beyond that.

The procedure for exiting self refresh requires a sequence of commands. First, CLK must be stable (stable clock is defined as a signal cycling within timing constraints specified for the clock pin) prior to CKE going back HIGH. Once CKE is HIGH, the SDRAM must have NOP commands issued (a minimum of two clocks) for ^{t}XSR, because time is required for the completion of any internal refresh in progress.

Upon exiting the self refresh mode, AUTO REFRESH commands must be issued every 15.625µs or less as both SELF REFRESH and AUTO REFRESH utilize the row refresh counter.

Micron Technology, Inc., reserves the right to change products or specifications without notice.
©1999, Micron Technology, Inc.

Operation

BANK/ROW ACTIVATION

Before any READ or WRITE commands can be issued to a bank within the SDRAM, a row in that bank must be "opened." This is accomplished via the ACTIVE command, which selects both the bank and the row to be activated (see Figure 3).

After opening a row (issuing an ACTIVE command), a READ or WRITE command may be issued to that row, subject to the ^{t}RCD specification. ^{t}RCD (MIN) should be divided by the clock period and rounded up to the next whole number to determine the earliest clock edge after the ACTIVE command on which a READ or WRITE command can be entered. For example, a ^{t}RCD specification of 20ns with a 125 MHz clock (8ns period) results in 2.5 clocks, rounded to 3. This is reflected in Figure 4, which covers any case where 2 < ^{t}RCD (MIN)/^{t}CK ≤ 3. (The same procedure is used to convert other specification limits from time units to clock cycles).

A subsequent ACTIVE command to a different row in the same bank can only be issued after the previous active row has been "closed" (precharged). The minimum time interval between successive ACTIVE commands to the same bank is defined by ^{t}RC.

A subsequent ACTIVE command to another bank can be issued while the first bank is being accessed, which results in a reduction of total row-access overhead. The minimum time interval between successive ACTIVE commands to different banks is defined by ^{t}RRD.

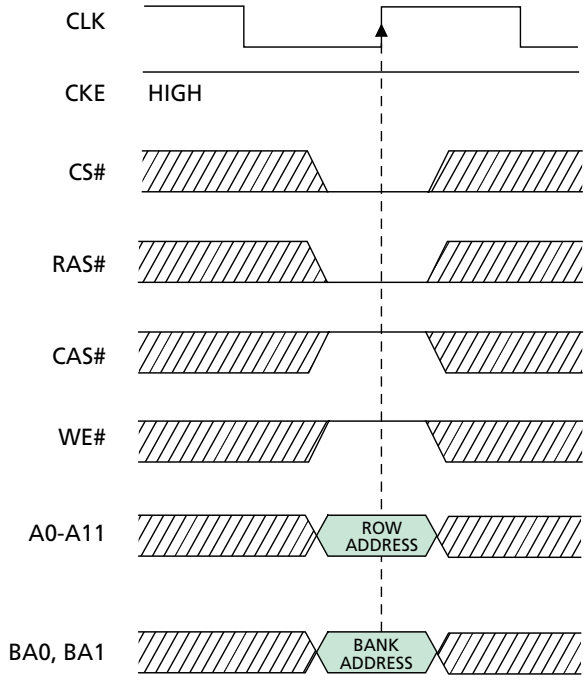

Figure 3
Activating a Specific Row in a Specific Bank

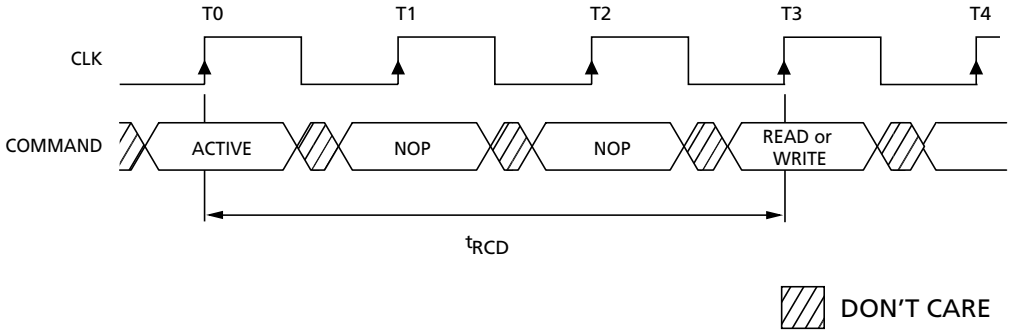

Figure 4
Example: Meeting ^{t}RCD (MIN) When 2 < ^{t}RCD (MIN)/^{t}CK ≤ 3

Micron Technology, Inc., reserves the right to change products or specifications without notice.
©1999, Micron Technology, Inc.

READs

READ bursts are initiated with a READ command, as shown in Figure 5.

The starting column and bank addresses are provided with the READ command, and auto precharge is either enabled or disabled for that burst access. If auto precharge is enabled, the row being accessed is precharged at the completion of the burst. For the generic READ commands used in the following illustrations, auto precharge is disabled.

During READ bursts, the valid data-out element from the starting column address will be available following the CAS latency after the READ command. Each subsequent data-out element will be valid by the next positive clock edge. Figure 6 shows general timing for each possible CAS latency setting.

Upon completion of a burst, assuming no other commands have been initiated, the DQs will go High-Z. A full-page burst will continue until terminated. (At the end of the page, it will wrap to column 0 and continue.)

Data from any READ burst may be truncated with a subsequent READ command, and data from a fixed-length READ burst may be immediately followed by data from a READ command. In either case, a continuous flow of data can be maintained. The first data element from the new burst follows either the last element of a completed burst or the last desired data element of a longer burst which is being truncated.

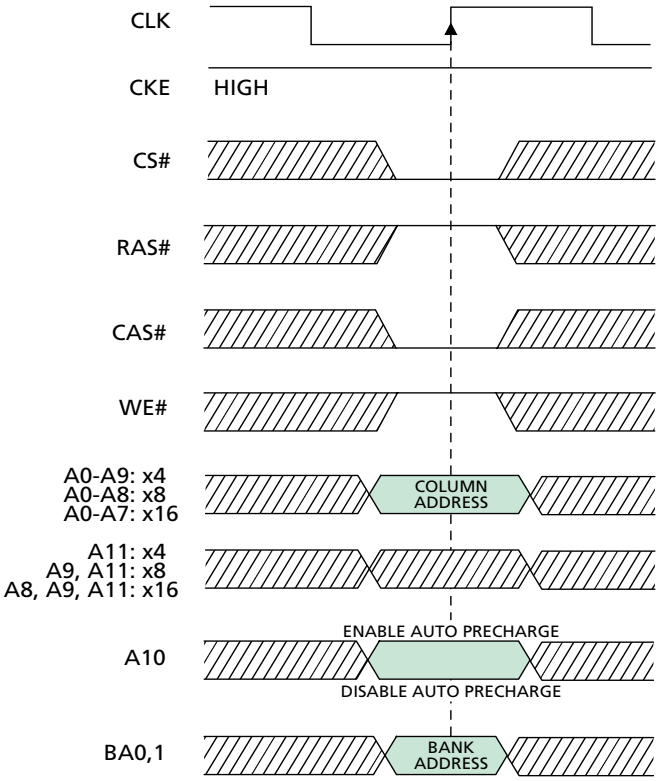

Figure 5
READ Command

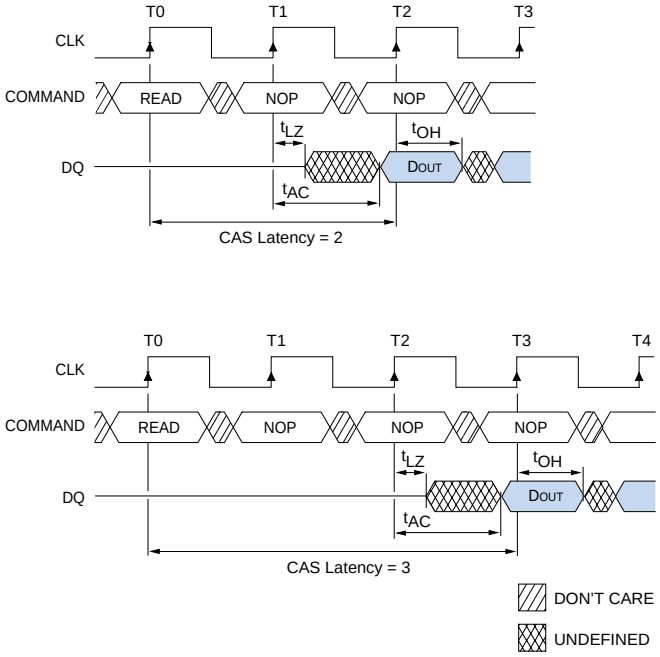

Figure 6
CAS Latency

Micron Technology, Inc., reserves the right to change products or specifications without notice.
©1999, Micron Technology, Inc.

The new READ command should be issued *x* cycles before the clock edge at which the last desired data element is valid, where *x* equals the CAS latency minus one. This is shown in Figure 7 for CAS latencies of two and three; data element *n* + 3 is either the last of a burst of four or the last desired of a longer burst. The 64Mb SDRAM uses a pipelined architecture and therefore does not require the 2*n* rule associated with a prefetch architecture. A READ command can be initiated on any clock cycle following a previous READ command. Full-speed random read accesses can be performed to the same bank, as shown in Figure 8, or each subsequent READ may be performed to a different bank.

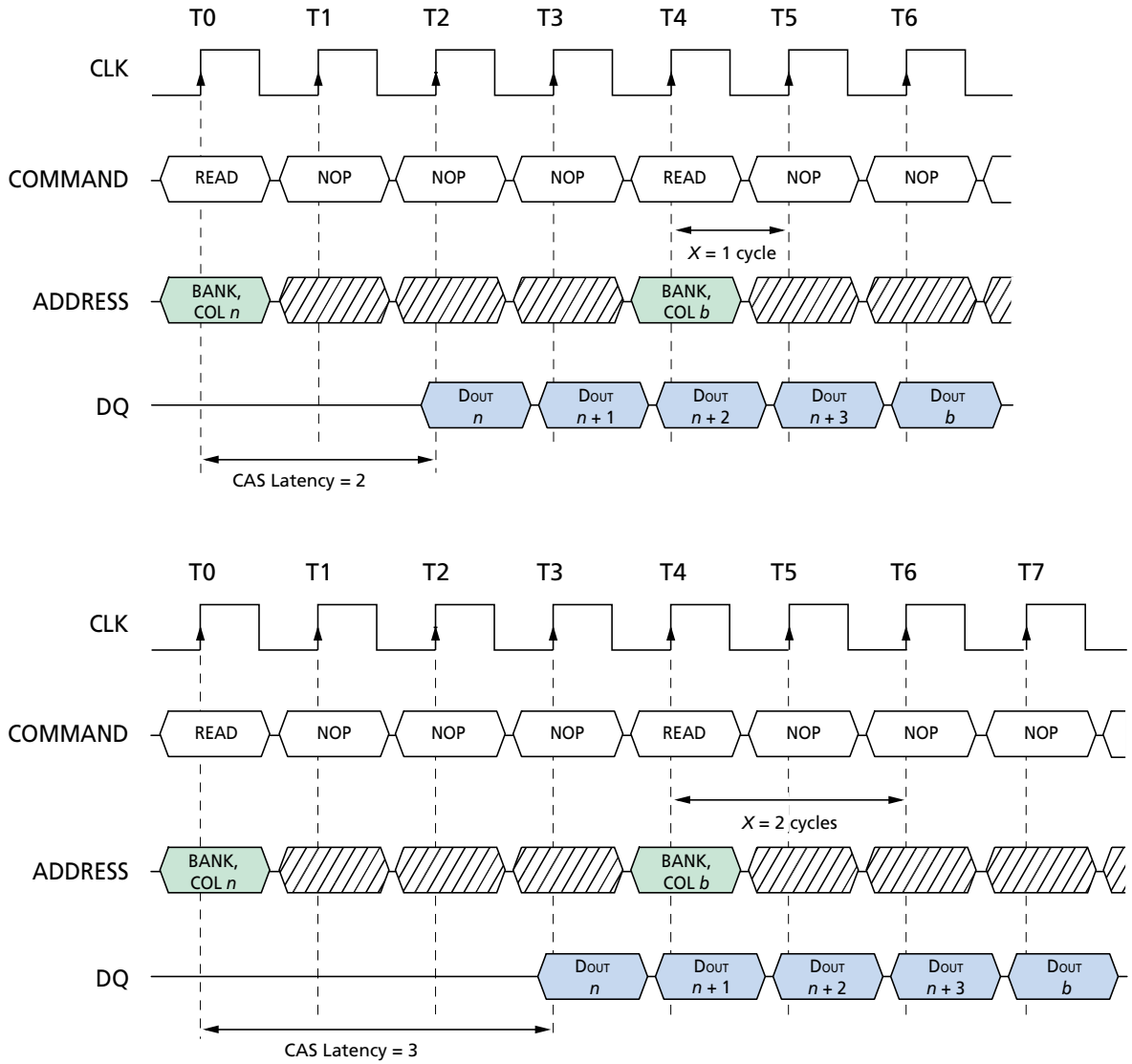

NOTE: Each READ command may be to any bank. DQM is LOW.

Figure 7
Consecutive READ Bursts

Micron Technology, Inc., reserves the right to change products or specifications without notice.
©1999, Micron Technology, Inc.

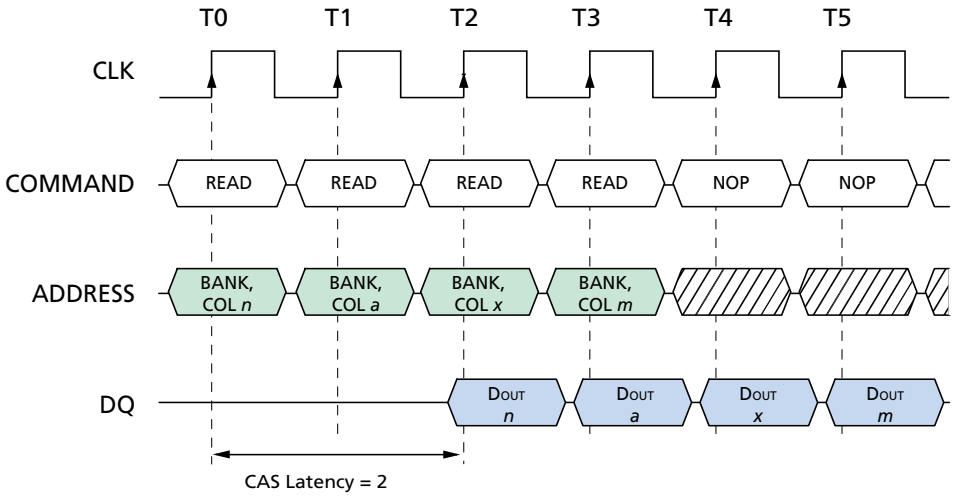

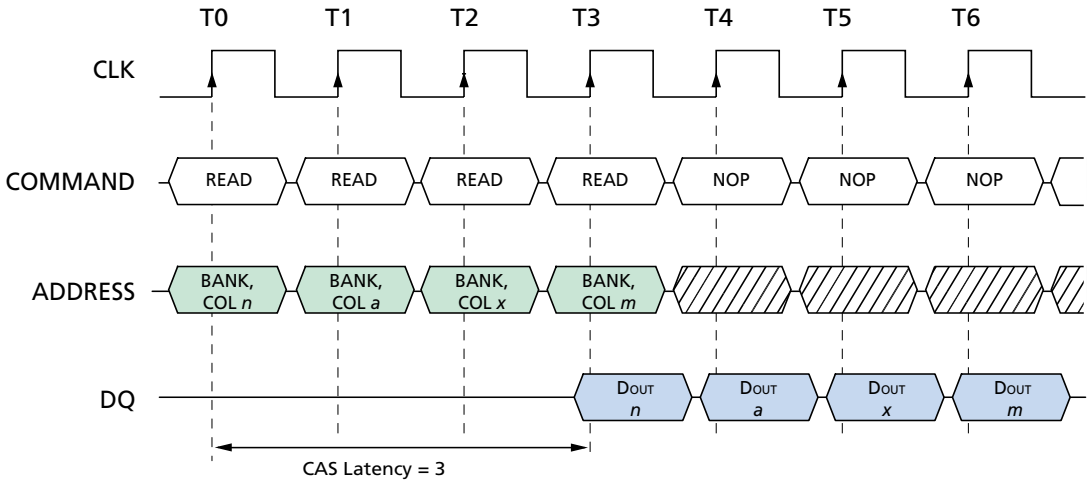

NOTE: Each READ command may be to any bank. DQM is LOW.

DON'T CARE

Figure 8
Random READ Accesses

Micron Technology, Inc., reserves the right to change products or specifications without notice.
©1999, Micron Technology, Inc.

Data from any READ burst may be truncated with a subsequent WRITE command, and data from a fixed-length READ burst may be immediately followed by data from a WRITE command (subject to bus turn-around limitations). The WRITE burst may be initiated on the clock edge immediately following the last (or last desired) data element from the READ burst, provided that I/O contention can be avoided. In a given system design, there may be a possibility that the device driving the input data will go Low-Z before the SDRAM DQs go High-Z. In this case, at least a single-cycle delay should occur between the last read data and the WRITE command.

The DQM input is used to avoid I/O contention, as shown in Figures 9 and 10. The DQM signal must be asserted (HIGH) at least two clocks prior to the WRITE command (DQM latency is two clocks for output buffers) to suppress data-out from the READ. Once the WRITE command is registered, the DQs will go High-Z (or remain High-Z), regardless of the state of the DQM signal, provided the DQM was active on the clock just prior to the WRITE command that truncated the READ command. If not, the second WRITE will be an invalid WRITE. For example, if DQM was LOW during T4 in Figure 10, then the WRITEs at T5 and T7 would be valid, while the WRITE at T6 would be invalid.

The DQM signal must be de-asserted prior to the WRITE command (DQM latency is zero clocks for input buffers) to ensure that the written data is not masked. Figure 9 shows the case where the clock frequency allows for bus contention to be avoided without adding a NOP cycle, and Figure 10 shows the case where the additional NOP is needed.

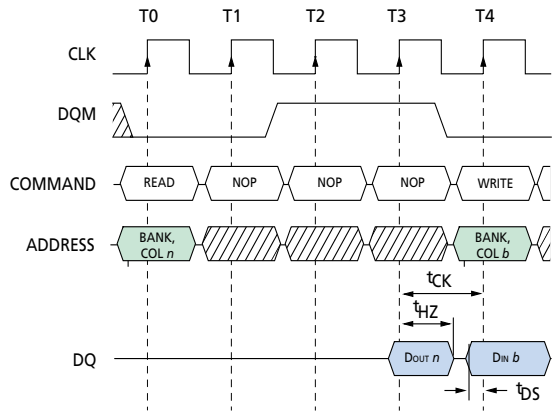

NOTE: A CAS latency of three is used for illustration. The READ command may be to any bank, and the WRITE command may be to any bank. If a burst of one is used, then DQM is not required.

Figure 9
READ to WRITE

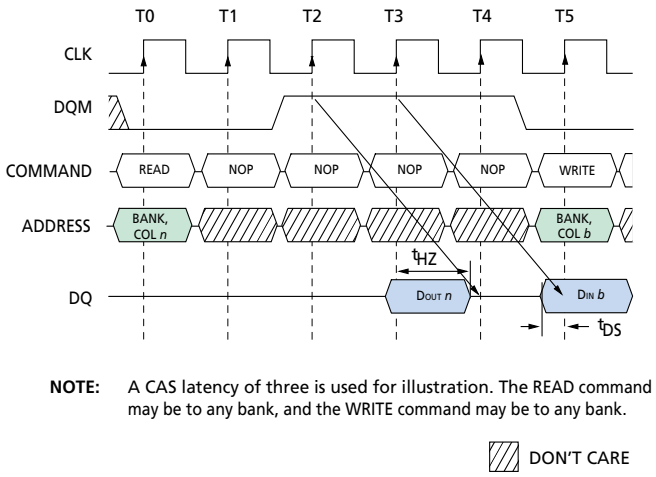

NOTE: A CAS latency of three is used for illustration. The READ command may be to any bank, and the WRITE command may be to any bank.

Figure 10
READ to WRITE With Extra Clock Cycle

Micron Technology, Inc., reserves the right to change products or specifications without notice.
©1999, Micron Technology, Inc.

A fixed-length READ burst may be followed by, or truncated with, a PRECHARGE command to the same bank (provided that auto precharge was not activated), and a full-page burst may be truncated with a PRECHARGE command to the same bank. The PRECHARGE command should be issued *x* cycles before the clock edge at which the last desired data element is valid, where *x* equals the CAS latency minus one. This is shown in Figure 11 for each possible CAS latency; data element *n* + 3 is either the last of a burst of four or the last desired of a longer burst. Following the PRECHARGE command, a subsequent command to the same bank cannot be issued until ^{t}RP is met. Note that part of the row precharge time is hidden during the access of the last data element(s).

In the case of a fixed-length burst being executed to completion, a PRECHARGE command issued at the optimum time (as described above) provides the same operation that would result from the same fixed-length burst with auto precharge. The disadvantage of the

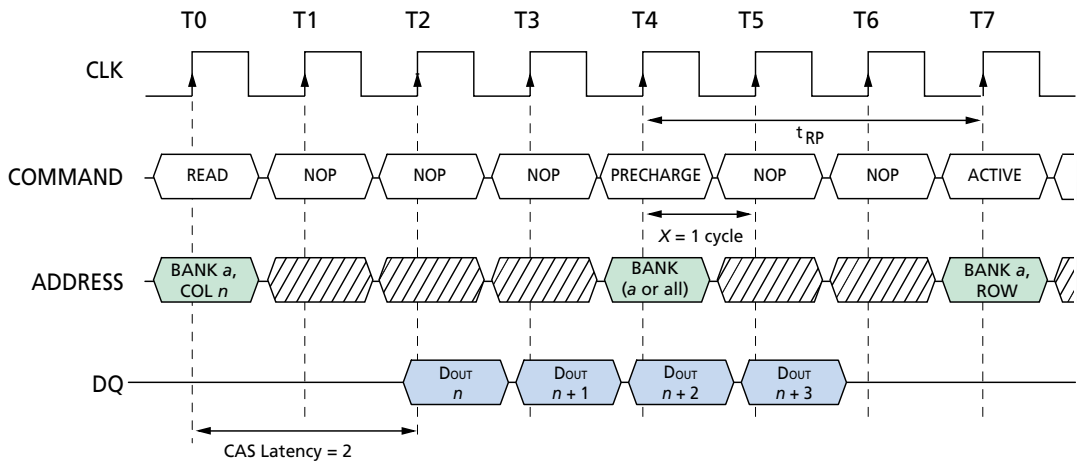

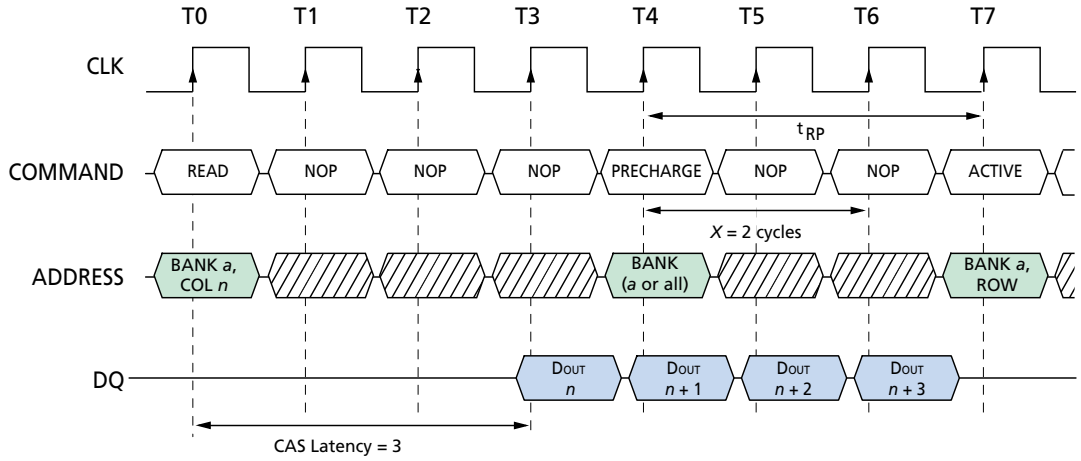

NOTE: DQM is LOW.

DON'T CARE

Figure 11
READ to PRECHARGE

Micron Technology, Inc., reserves the right to change products or specifications without notice.
©1999, Micron Technology, Inc.

PRECHARGE command is that it requires that the command and address buses be available at the appropriate time to issue the command; the advantage of the PRECHARGE command is that it can be used to truncate fixed-length or full-page bursts.

Full-page READ bursts can be truncated with the BURST TERMINATE command, and fixed-length READ bursts may be truncated with a BURST TERMINATE command, provided that auto precharge was not activated. The BURST TERMINATE command should be issued *x* cycles before the clock edge at which the last desired data element is valid, where *x* equals the CAS latency minus one. This is shown in Figure 12 for each possible CAS latency; data element *n* + 3 is the last desired data element of a longer burst.

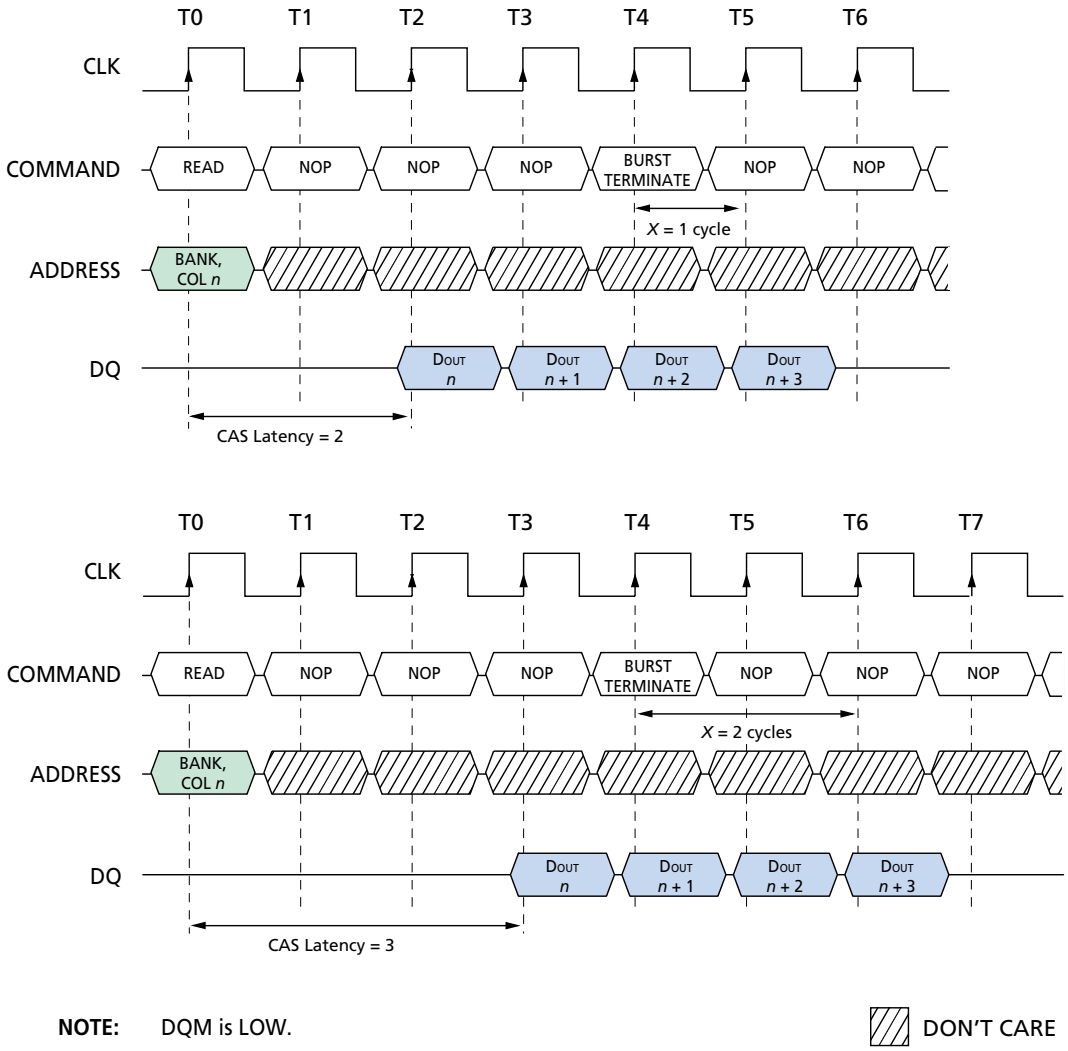

NOTE: DQM is LOW.

DON'T CARE

Figure 12
Terminating a READ Burst

Micron Technology, Inc., reserves the right to change products or specifications without notice.
©1999, Micron Technology, Inc.

WRITEs

WRITE bursts are initiated with a WRITE command, as shown in Figure 13.

The starting column and bank addresses are provided with the WRITE command, and auto precharge is either enabled or disabled for that access. If auto precharge is enabled, the row being accessed is precharged at the completion of the burst. For the generic WRITE commands used in the following illustrations, auto precharge is disabled.

During WRITE bursts, the first valid data-in element will be registered coincident with the WRITE command. Subsequent data elements will be registered on each successive positive clock edge. Upon completion of a fixed-length burst, assuming no other commands have been initiated, the DQs will remain High-Z and any additional input data will be ignored (see Figure 14). A full-page burst will continue until terminated. (At the end of the page, it will wrap to column 0 and continue.)

Data for any WRITE burst may be truncated with a subsequent WRITE command, and data for a fixed-length WRITE burst may be immediately followed by data for a WRITE command. The new WRITE command can be issued on any clock following the previous WRITE command, and the data provided coincident with the new command applies to the new command.

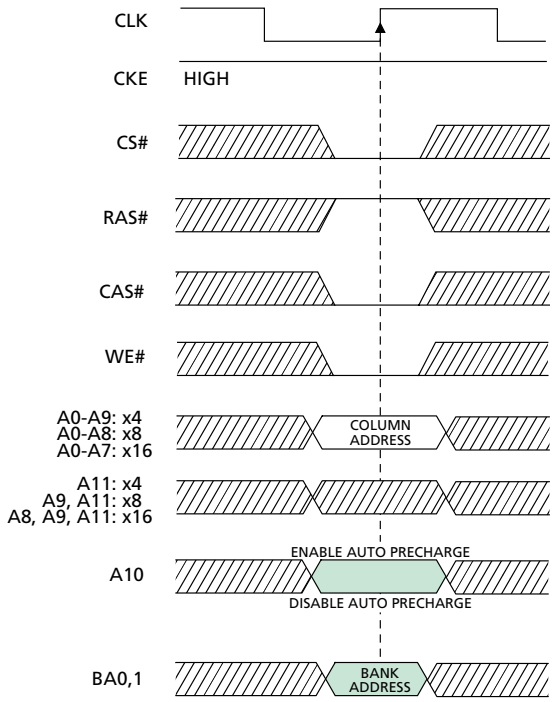

Figure 13
WRITE Command

An example is shown in Figure 15. Data $n + 1$ is either the last of a burst of two or the last desired of a longer burst. The 64Mb SDRAM uses a pipelined architecture and therefore does not require the $2n$ rule associated with a prefetch architecture. A WRITE command can be initiated on any clock cycle following a previous WRITE command. Full-speed random write accesses within a page can be performed to the same bank, as shown in Figure 16, or each subsequent WRITE may be performed to a different bank.

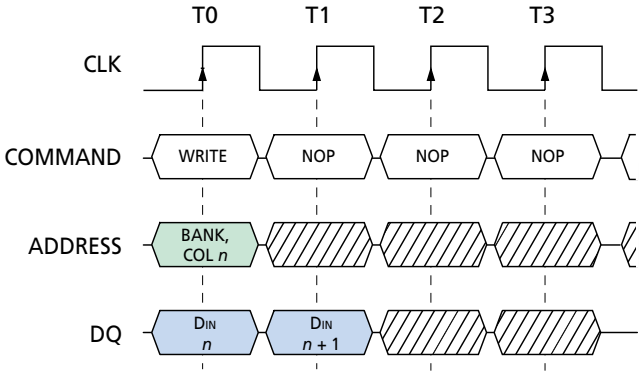

NOTE: Burst length = 2. DQM is LOW.

Figure 14
WRITE Burst

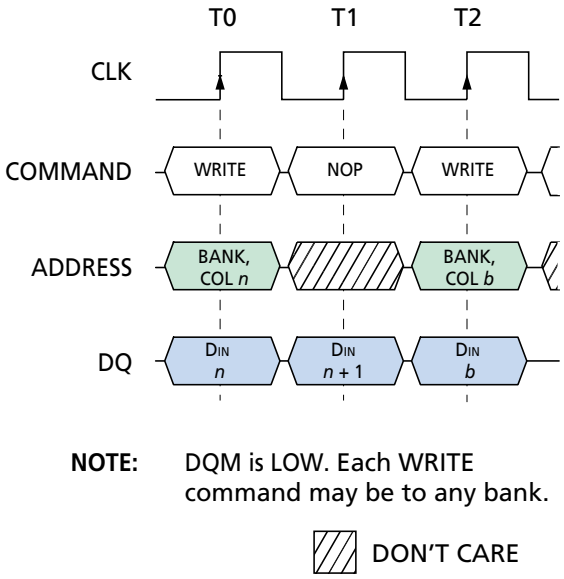

NOTE: DQM is LOW. Each WRITE command may be to any bank.

Figure 15
WRITE to WRITE

Micron Technology, Inc., reserves the right to change products or specifications without notice.
©1999, Micron Technology, Inc.

Data for any WRITE burst may be truncated with a subsequent READ command, and data for a fixed-length WRITE burst may be immediately followed by a subsequent READ command. Once the READ command is registered, the data inputs will be ignored, and WRITEs will not be executed. An example is shown in Figure 17. Data *n* + 1 is either the last of a burst of two or the last desired of a longer burst.

Data for a fixed-length WRITE burst may be followed by, or truncated with, a PRECHARGE command to the same bank (provided that auto precharge was not activated), and a full-page WRITE burst may be truncated with a PRECHARGE command to the same bank. The PRECHARGE command should be issued ^{t}WR after the clock edge at which the last desired input data element is registered. The auto precharge mode requires a ^{t}WR of at least one clock plus time, regardless of frequency. In addition, when truncating a WRITE burst, the DQM signal must be used to mask input data for the clock edge prior to, and the clock edge coincident with, the PRECHARGE command. An example is shown in Figure 18. Data *n* + 1 is either the last of a burst of two or the last desired of a longer burst. Following the PRECHARGE command, a subsequent command to the same bank cannot be issued until ^{t}RP is met.

In the case of a fixed-length burst being executed to completion, a PRECHARGE command issued at the optimum time (as described above) provides the same operation that would result from the same fixed-length burst with auto precharge. The disadvantage of the PRECHARGE command is that it requires that the command and address buses be available at the appropriate time to issue the command; the advantage of the PRECHARGE command is that it can be used to truncate fixed-length or full-page bursts.

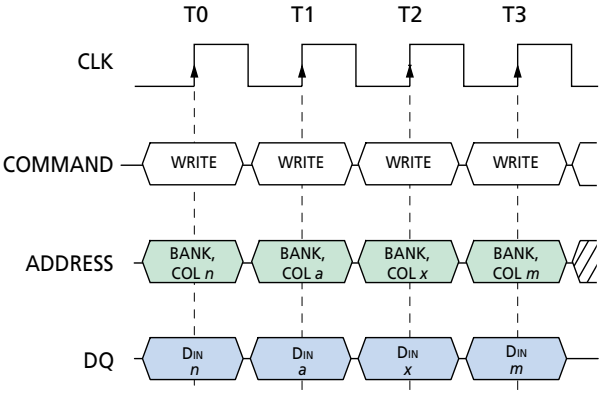

NOTE: Each WRITE command may be to any bank. DQM is LOW.

Figure 16
Random WRITE Cycles

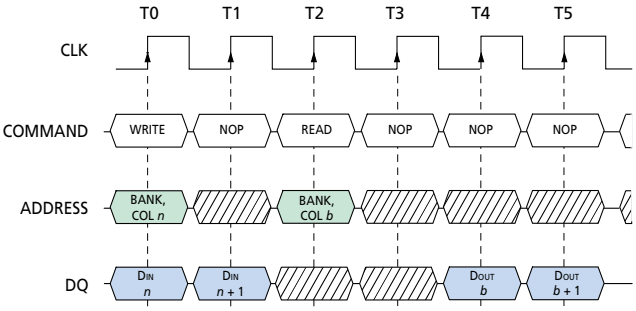

NOTE: The WRITE command may be to any bank, and the READ command may be to any bank. DQM is LOW. CAS latency = 2 for illustration.

Figure 17
WRITE to READ

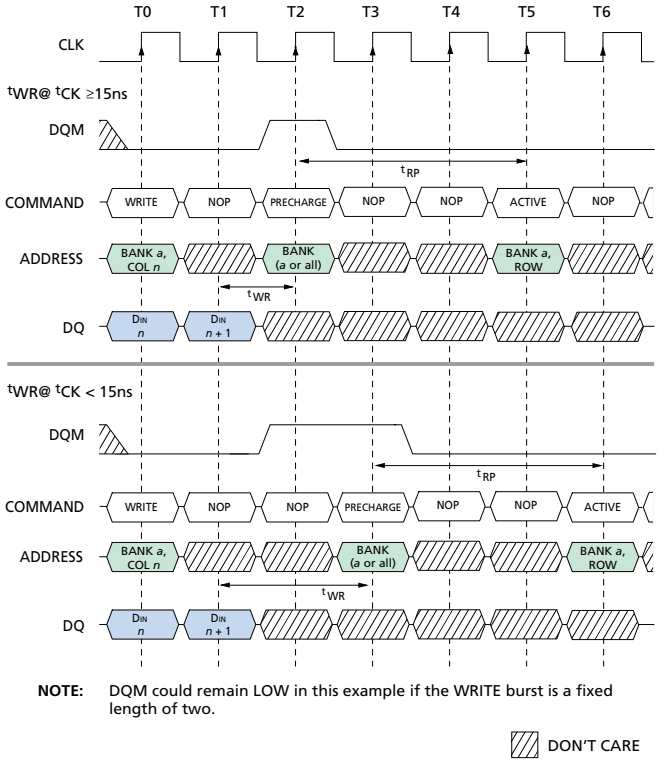

NOTE: DQM could remain LOW in this example if the WRITE burst is a fixed length of two.

DON'T CARE

Figure 18
WRITE to PRECHARGE

Micron Technology, Inc., reserves the right to change products or specifications without notice.
©1999, Micron Technology, Inc.

Fixed-length or full-page WRITE bursts can be truncated with the BURST TERMINATE command. When truncating a WRITE burst, the input data applied coincident with the BURST TERMINATE command will be ignored. The last data written (provided that DQM is LOW at that time) will be the input data applied one clock previous to the BURST TERMINATE command. This is shown in Figure 19, where data *n* is the last desired data element of a longer burst.

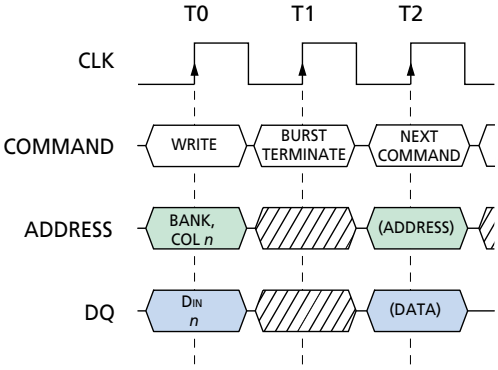

NOTE: DQMs are LOW.

Figure 19
Terminating a WRITE Burst

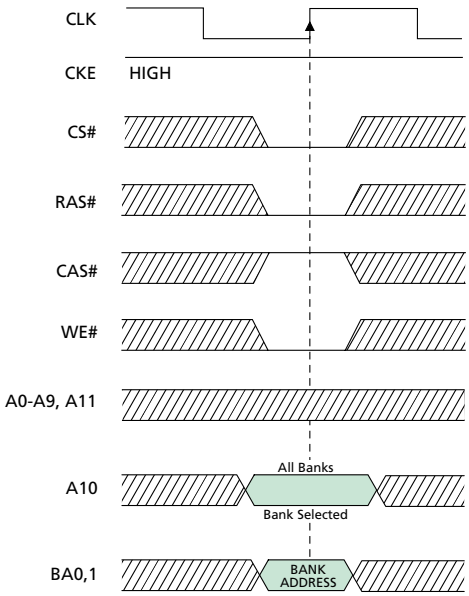

Figure 20
PRECHARGE Command

PRECHARGE

The PRECHARGE command (Figure 20) is used to deactivate the open row in a particular bank or the open row in all banks. The bank(s) will be available for a subsequent row access some specified time (^{t}RP) after the PRECHARGE command is issued. Input A10 determines whether one or all banks are to be precharged, and in the case where only one bank is to be precharged, inputs BA0, BA1 select the bank. When all banks are to be precharged, inputs BA0, BA1 are treated as "Don't Care." Once a bank has been precharged, it is in the idle state and must be activated prior to any READ or WRITE commands being issued to that bank.

POWER-DOWN

Power-down occurs if CKE is registered LOW coincident with a NOP or COMMAND INHIBIT when no accesses are in progress. If power-down occurs when all banks are idle, this mode is referred to as precharge power-down; if power-down occurs when there is a row active in either bank, this mode is referred to as active power-down. Entering power-down deactivates the input and output buffers, excluding CKE, for maximum power savings while in standby. The device may not remain in the power-down state longer than the refresh period (64ms) since no refresh operations are performed in this mode.

The power-down state is exited by registering a NOP or COMMAND INHIBIT and CKE HIGH at the desired clock edge (meeting ^{t}CKS). See Figure 21.

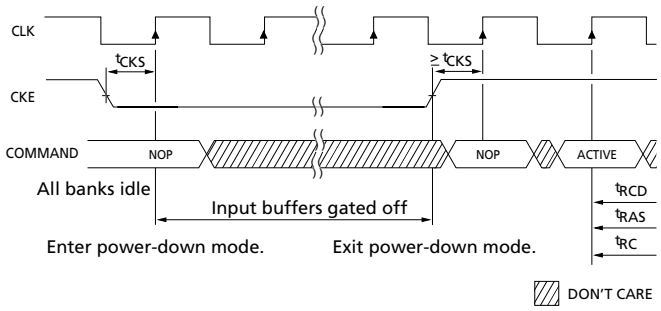

Figure 21
Power-Down

Micron Technology, Inc., reserves the right to change products or specifications without notice.
©1999, Micron Technology, Inc.

CLOCK SUSPEND

The clock suspend mode occurs when a column access/burst is in progress and CKE is registered LOW. In the clock suspend mode, the internal clock is deactivated, "freezing" the synchronous logic.

For each positive clock edge on which CKE is sampled LOW, the next internal positive clock edge is suspended. Any command or data present on the input pins at the time of a suspended internal clock edge is ignored; any data present on the DQ pins remains driven; and burst counters are not incremented, as long as the clock is suspended. (See examples in Figures 22 and 23.)

Clock suspend mode is exited by registering CKE HIGH; the internal clock and related operation will resume on the subsequent positive clock edge.

BURST READ/SINGLE WRITE

The burst read/single write mode is entered by programming the write burst mode bit (M9) in the mode register to a logic 1. In this mode, all WRITE commands result in the access of a single column location (burst of one), regardless of the programmed burst length. READ commands access columns according to the programmed burst length and sequence, just as in the normal mode of operation (M9 = 0).

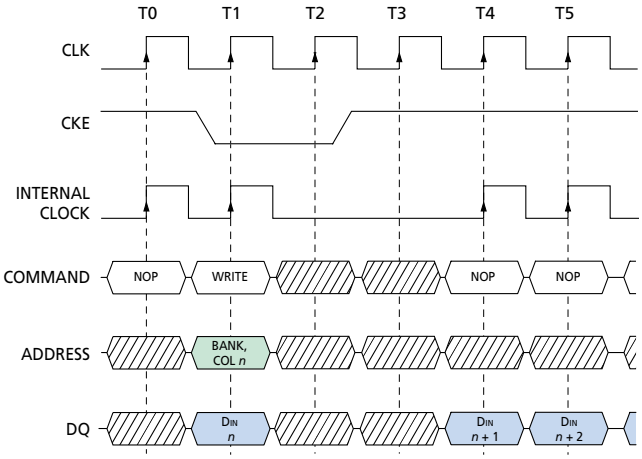

NOTE: For this example, burst length = 4 or greater, and DQM is LOW.

Figure 22
Clock Suspend During WRITE Burst

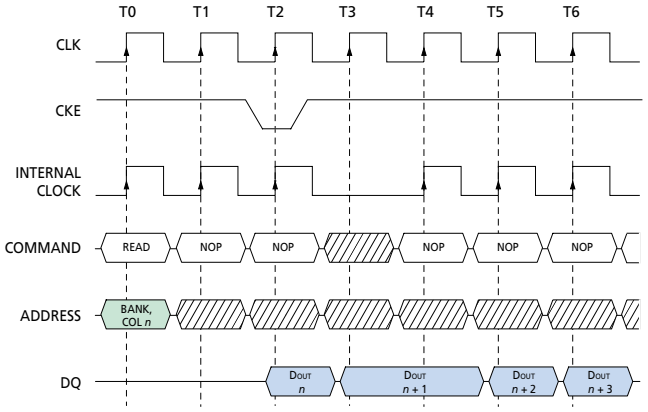

NOTE: For this example, CAS latency = 2, burst length = 4 or greater, and DQM is LOW.

DON'T CARE

Figure 23
Clock Suspend During READ Burst

Micron Technology, Inc., reserves the right to change products or specifications without notice.
©1999, Micron Technology, Inc.

CONCURRENT AUTO PRECHARGE

An access command (READ or WRITE) to another bank while an access command with auto precharge enabled is executing is not allowed by SDRAMs, unless the SDRAM supports CONCURRENT AUTO PRECHARGE. Micron SDRAMs support CONCURRENT AUTO PRECHARGE. Four cases where CONCURRENT AUTO PRECHARGE occurs are defined below.

READ with Auto Precharge

1. Interrupted by a READ (with or without auto precharge): A READ to bank *m* will interrupt a READ on bank *n*, CAS latency later. The PRECHARGE to bank *n* will begin when the READ to bank *m* is registered (Figure 24).
2. Interrupted by a WRITE (with or without auto precharge): A WRITE to bank *m* will interrupt a READ on bank *n* when registered. DQM should be used two clocks prior to the WRITE command to prevent bus contention. The PRECHARGE to bank *n* will begin when the WRITE to bank *m* is registered (Figure 25).

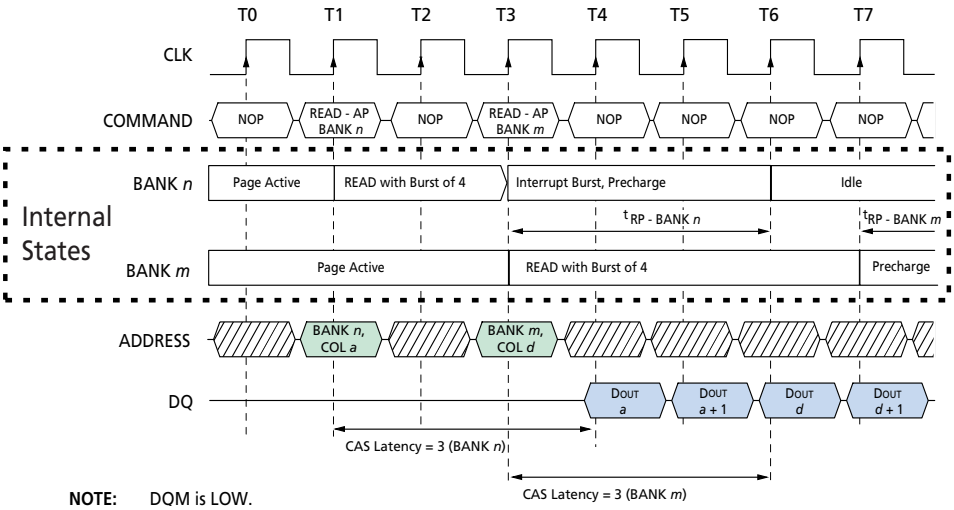

NOTE: DQM is LOW.

Figure 24
READ With Auto Precharge Interrupted by a READ

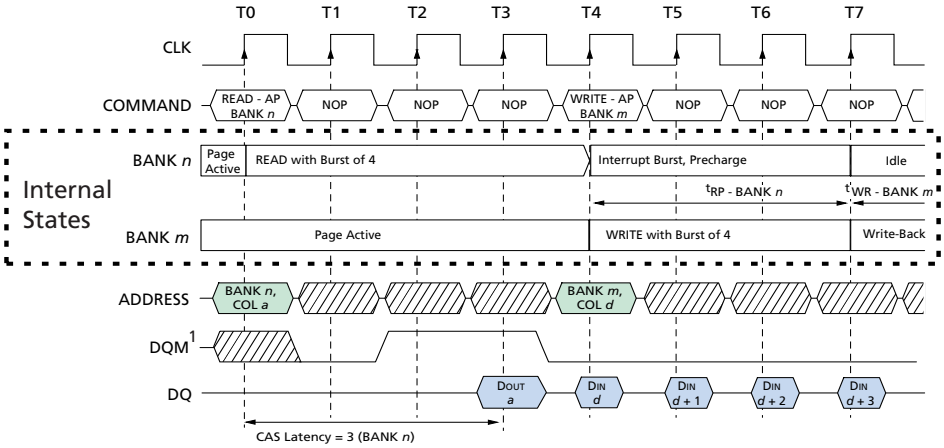

NOTE: 1. DQM is HIGH at T2 to prevent DOUT-*a*+1 from contending with DIN-*d* at T4.

Figure 25
READ With Auto Precharge Interrupted by a WRITE

Micron Technology, Inc., reserves the right to change products or specifications without notice.
©1999, Micron Technology, Inc.

WRITE with Auto Precharge

3. Interrupted by a READ (with or without auto precharge): A READ to bank *m* will interrupt a WRITE on bank *n* when registered, with the data-out appearing CAS latency later. The PRECHARGE to bank *n* will begin after ^{t}WR is met, where ^{t}WR begins when the READ to bank *m* is registered. The last valid WRITE to bank *n* will be data-in registered one clock prior to the READ to bank *m* (Figure 26).

4. Interrupted by a WRITE (with or without auto precharge): A WRITE to bank *m* will interrupt a WRITE on bank *n* when registered. The PRECHARGE to bank *n* will begin after ^{t}WR is met, where ^{t}WR begins when the WRITE to bank *m* is registered. The last valid data WRITE to bank *n* will be data registered one clock prior to a WRITE to bank *m* (Figure 27).

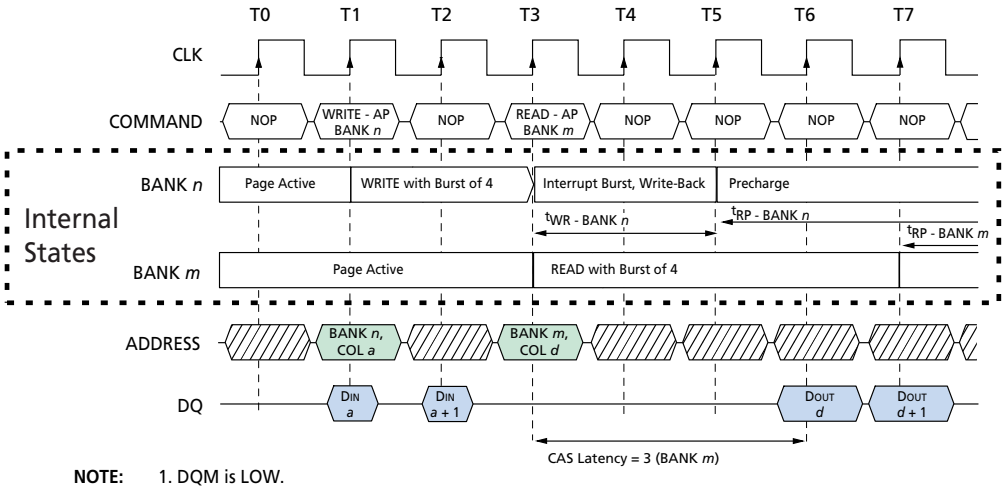

NOTE: 1. DQM is LOW.

Figure 26
WRITE With Auto Precharge Interrupted by a READ

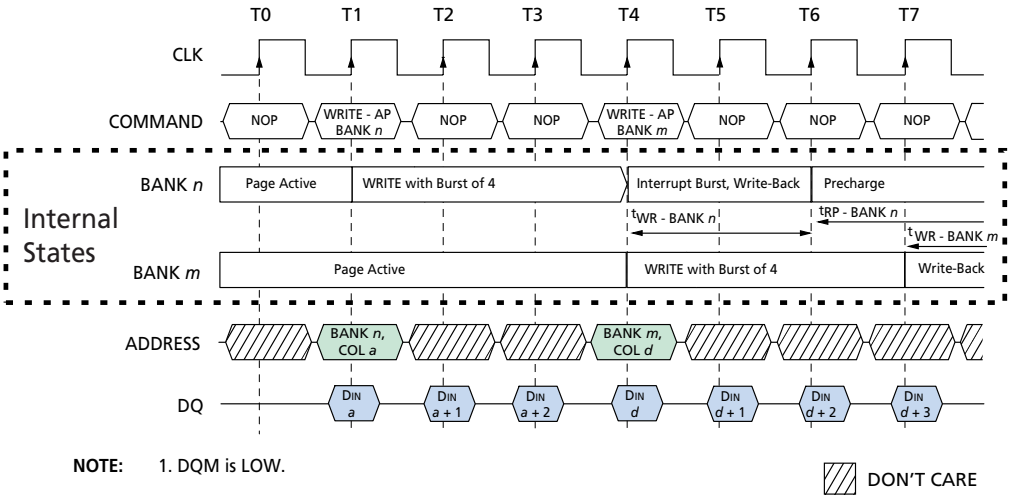

NOTE: 1. DQM is LOW.

Figure 27
WRITE With Auto Precharge Interrupted by a WRITE

Micron Technology, Inc., reserves the right to change products or specifications without notice.
©1999, Micron Technology, Inc.

TRUTH TABLE 2 – CKE

(Notes: 1-4)

CKE_{n-1}	CKE_n	CURRENT STATE	$COMMAND_n$	$ACTION_n$	NOTES
L	L	Power-Down	X	Maintain Power-Down	
		Self Refresh	X	Maintain Self Refresh	
		Clock Suspend	X	Maintain Clock Suspend	
L	H	Power-Down	COMMAND INHIBIT or NOP	Exit Power-Down	5
		Self Refresh	COMMAND INHIBIT or NOP	Exit Self Refresh	6
		Clock Suspend	X	Exit Clock Suspend	7
H	L	All Banks Idle	COMMAND INHIBIT or NOP	Power-Down Entry	
		All Banks Idle	AUTO REFRESH	Self Refresh Entry	
		Reading or Writing	VALID	Clock Suspend Entry	
H	H		See Truth Table 3		

NOTE:
1. CKE_n is the logic state of CKE at clock edge *n*; CKE_{n-1} was the state of CKE at the previous clock edge.
2. Current state is the state of the SDRAM immediately prior to clock edge *n*.
3. $COMMAND_n$ is the command registered at clock edge *n*, and $ACTION_n$ is a result of $COMMAND_n$.
4. All states and sequences not shown are illegal or reserved.
5. Exiting power-down at clock edge *n* will put the device in the all banks idle state in time for clock edge *n + 1* (provided that ^tCKS is met).
6. Exiting self refresh at clock edge *n* will put the device in the all banks idle state once ^tXSR is met. COMMAND INHIBIT or NOP commands should be issued on any clock edges occurring during the ^tXSR period. A minimum of two NOP commands must be provided during ^tXSR period.
7. After exiting clock suspend at clock edge *n*, the device will resume operation and recognize the next command at clock edge *n + 1*.

Micron Technology, Inc., reserves the right to change products or specifications without notice.
©1999, Micron Technology, Inc.

TRUTH TABLE 3 – CURRENT STATE BANK *n*, COMMAND TO BANK *n*

(Notes: 1-6; notes appear below and on next page)

CURRENT STATE	CS#	RAS#	CAS#	WE#	COMMAND (ACTION)	NOTES
Any	H	X	X	X	COMMAND INHIBIT (NOP/Continue previous operation)	
	L	H	H	H	NO OPERATION (NOP/Continue previous operation)	
Idle	L	L	H	H	ACTIVE (Select and activate row)	
	L	L	L	H	AUTO REFRESH	7
	L	L	L	L	LOAD MODE REGISTER	7
	L	L	H	L	PRECHARGE	11
Row Active	L	H	L	H	READ (Select column and start READ burst)	10
	L	H	L	L	WRITE (Select column and start WRITE burst)	10
	L	L	H	L	PRECHARGE (Deactivate row in bank or banks)	8
Read (Auto Precharge Disabled)	L	H	L	H	READ (Select column and start new READ burst)	10
	L	H	L	L	WRITE (Select column and start WRITE burst)	10
	L	L	H	L	PRECHARGE (Truncate READ burst, start PRECHARGE)	8
	L	H	H	L	BURST TERMINATE	9
Write (Auto Precharge Disabled)	L	H	L	H	READ (Select column and start READ burst)	10
	L	H	L	L	WRITE (Select column and start new WRITE burst)	10
	L	L	H	L	PRECHARGE (Truncate WRITE burst, start PRECHARGE)	8
	L	H	H	L	BURST TERMINATE	9

NOTE:
1. This table applies when CKE_{n-1} was HIGH and CKE_n is HIGH (see Truth Table 2) and after ^tXSR has been met (if the previous state was self refresh).
2. This table is bank-specific, except where noted; i.e., the current state is for a specific bank and the commands shown are those allowed to be issued to that bank when in that state. Exceptions are covered in the notes below.
3. Current state definitions:
   - Idle: The bank has been precharged, and ^tRP has been met.
   - Row Active: A row in the bank has been activated, and ^tRCD has been met. No data bursts/accesses and no register accesses are in progress.
   - Read: A READ burst has been initiated, with auto precharge disabled, and has not yet terminated or been terminated.
   - Write: A WRITE burst has been initiated, with auto precharge disabled, and has not yet terminated or been terminated.
4. The following states must not be interrupted by a command issued to the same bank. COMMAND INHIBIT or NOP commands, or allowable commands to the other bank should be issued on any clock edge occurring during these states. Allowable commands to the other bank are determined by its current state and Truth Table 3, and according to Truth Table 4.
   - Precharging: Starts with registration of a PRECHARGE command and ends when ^tRP is met. Once ^tRP is met, the bank will be in the idle state.
   - Row Activating: Starts with registration of an ACTIVE command and ends when ^tRCD is met. Once ^tRCD is met, the bank will be in the row active state.
   - Read w/Auto Precharge Enabled: Starts with registration of a READ command with auto precharge enabled and ends when ^tRP has been met. Once ^tRP is met, the bank will be in the idle state.
   - Write w/Auto Precharge Enabled: Starts with registration of a WRITE command with auto precharge enabled and ends when ^tRP has been met. Once ^tRP is met, the bank will be in the idle state.

(Continued on next page)

Micron Technology, Inc., reserves the right to change products or specifications without notice.
©1999, Micron Technology, Inc.

NOTE (continued):

5. The following states must not be interrupted by any executable command; COMMAND INHIBIT or NOP commands must be applied on each positive clock edge during these states.
   - Refreshing: Starts with registration of an AUTO REFRESH command and ends when ^{t}RC is met. Once ^{t}RC is met, the SDRAM will be in the all banks idle state.
   - Accessing Mode Register: Starts with registration of a LOAD MODE REGISTER command and ends when ^{t}MRD has been met. Once ^{t}MRD is met, the SDRAM will be in the all banks idle state.
   - Precharging All: Starts with registration of a PRECHARGE ALL command and ends when ^{t}RP is met. Once ^{t}RP is met, all banks will be in the idle state.
6. All states and sequences not shown are illegal or reserved.
7. Not bank-specific; requires that all banks are idle.
8. May or may not be bank-specific; if all banks are to be precharged, all must be in a valid state for precharging.
9. Not bank-specific; BURST TERMINATE affects the most recent READ or WRITE burst, regardless of bank.
10. READs or WRITEs listed in the Command (Action) column include READs or WRITEs with auto precharge enabled and READs or WRITEs with auto precharge disabled.
11. Does not affect the state of the bank and acts as a NOP to that bank.

Micron Technology, Inc., reserves the right to change products or specifications without notice.
©1999, Micron Technology, Inc.

TRUTH TABLE 4 – CURRENT STATE BANK *n*, COMMAND TO BANK *m*

(Notes: 1-6; notes appear below and on next page)

CURRENT STATE	CS#	RAS#	CAS#	WE#	COMMAND (ACTION)	NOTES
Any	H	X	X	X	COMMAND INHIBIT (NOP/Continue previous operation)	
	L	H	H	H	NO OPERATION (NOP/Continue previous operation)	
Idle	X	X	X	X	Any Command Otherwise Allowed to Bank *m*	
Row Activating, Active, or Precharging	L	L	H	H	ACTIVE (Select and activate row)	
	L	H	L	H	READ (Select column and start READ burst)	7
	L	H	L	L	WRITE (Select column and start WRITE burst)	7
	L	L	H	L	PRECHARGE	
Read (Auto Precharge Disabled)	L	L	H	H	ACTIVE (Select and activate row)	
	L	H	L	H	READ (Select column and start new READ burst)	7, 10
	L	H	L	L	WRITE (Select column and start WRITE burst)	7, 11
	L	L	H	L	PRECHARGE	9
Write (Auto Precharge Disabled)	L	L	H	H	ACTIVE (Select and activate row)	
	L	H	L	H	READ (Select column and start READ burst)	7, 12
	L	H	L	L	WRITE (Select column and start new WRITE burst)	7, 13
	L	L	H	L	PRECHARGE	9
Read (With Auto Precharge)	L	L	H	H	ACTIVE (Select and activate row)	
	L	H	L	H	READ (Select column and start new READ burst)	7, 8, 14
	L	H	L	L	WRITE (Select column and start WRITE burst)	7, 8, 15
	L	L	H	L	PRECHARGE	9
Write (With Auto Precharge)	L	L	H	H	ACTIVE (Select and activate row)	
	L	H	L	H	READ (Select column and start READ burst)	7, 8, 16
	L	H	L	L	WRITE (Select column and start new WRITE burst)	7, 8, 17
	L	L	H	L	PRECHARGE	9

NOTE: 1. This table applies when CKE_{n-1} was HIGH and CKE_n is HIGH (see Truth Table 2) and after ^tXSR has been met (if the previous state was self refresh).

2. This table describes alternate bank operation, except where noted; i.e., the current state is for bank *n* and the commands shown are those allowed to be issued to bank *m* (assuming that bank *m* is in such a state that the given command is allowable). Exceptions are covered in the notes below.

3. Current state definitions:

Idle: The bank has been precharged, and ^tRP has been met.

Row Active: A row in the bank has been activated, and ^tRCD has been met. No data bursts/accesses and no register accesses are in progress.

Read: A READ burst has been initiated, with auto precharge disabled, and has not yet terminated or been terminated.

Write: A WRITE burst has been initiated, with auto precharge disabled, and has not yet terminated or been terminated.

Read w/Auto Precharge Enabled: Starts with registration of a READ command with auto precharge enabled, and ends when ^tRP has been met. Once ^tRP is met, the bank will be in the idle state.

Write w/Auto Precharge Enabled: Starts with registration of a WRITE command with auto precharge enabled, and ends when ^tRP has been met. Once ^tRP is met, the bank will be in the idle state.

(Continued on next page)

Micron Technology, Inc., reserves the right to change products or specifications without notice.
©1999, Micron Technology, Inc.

NOTE (continued):

4. AUTO REFRESH, SELF REFRESH and LOAD MODE REGISTER commands may only be issued when all banks are idle.
5. A BURST TERMINATE command cannot be issued to another bank; it applies to the bank represented by the current state only.
6. All states and sequences not shown are illegal or reserved.
7. READs or WRITEs to bank *m* listed in the Command (Action) column include READs or WRITEs with auto precharge enabled and READs or WRITEs with auto precharge disabled.
8. CONCURRENT AUTO PRECHARGE: Bank *n* will initiate the AUTO PRECHARGE command when its burst has been interrupted by bank *m*'s burst.
9. Burst in bank *n* continues as initiated.
10. For a READ without auto precharge interrupted by a READ (with or without auto precharge), the READ to bank *m* will interrupt the READ on bank *n*, CAS latency later (Figure 7).
11. For a READ without auto precharge interrupted by a WRITE (with or without auto precharge), the WRITE to bank *m* will interrupt the READ on bank *n* when registered (Figures 9 and 10). DQM should be used one clock prior to the WRITE command to prevent bus contention.
12. For a WRITE without auto precharge interrupted by a READ (with or without auto precharge), the READ to bank *m* will interrupt the WRITE on bank *n* when registered (Figure 17), with the data-out appearing CAS latency later. The last valid WRITE to bank *n* will be data-in registered one clock prior to the READ to bank *m*.
13. For a WRITE without auto precharge interrupted by a WRITE (with or without auto precharge), the WRITE to bank *m* will interrupt the WRITE on bank *n* when registered (Figure 15). The last valid WRITE to bank *n* will be data-in registered one clock prior to the READ to bank *m*.
14. For a READ with auto precharge interrupted by a READ (with or without auto precharge), the READ to bank *m* will interrupt the READ on bank *n*, CAS latency later. The PRECHARGE to bank *n* will begin when the READ to bank *m* is registered (Figure 24).
15. For a READ with auto precharge interrupted by a WRITE (with or without auto precharge), the WRITE to bank *m* will interrupt the READ on bank *n* when registered. DQM should be used two clocks prior to the WRITE command to prevent bus contention. The PRECHARGE to bank *n* will begin when the WRITE to bank *m* is registered (Figure 25).
16. For a WRITE with auto precharge interrupted by a READ (with or without auto precharge), the READ to bank *m* will interrupt the WRITE on bank *n* when registered, with the data-out appearing CAS latency later. The PRECHARGE to bank *n* will begin after ^{t}WR is met, where ^{t}WR begins when the READ to bank *m* is registered. The last valid WRITE to bank *n* will be data-in registered one clock prior to the READ to bank *m* (Figure 26).
17. For a WRITE with auto precharge interrupted by a WRITE (with or without auto precharge), the WRITE to bank *m* will interrupt the WRITE on bank *n* when registered. The PRECHARGE to bank *n* will begin after ^{t}WR is met, where ^{t}WR begins when the WRITE to bank *m* is registered. The last valid WRITE to bank *n* will be data registered one clock prior to the WRITE to bank *m* (Figure 27).

Micron Technology, Inc., reserves the right to change products or specifications without notice.
©1999, Micron Technology, Inc.

ABSOLUTE MAXIMUM RATINGS*

Voltage on V_{DD}, $V_{DD}Q$ Supply
Relative to V_{SS} ..... -1V to +4.6V
Voltage on Inputs, NC or I/O Pins
Relative to V_{SS} ..... -1V to +4.6V
Operating Temperature,
T_A (commercial) ..... 0°C to +70°C
Operating Temperature,
T_A (industrial) ..... -40°C to +85°C
Storage Temperature (plastic) ..... -55°C to +150°C
Power Dissipation 1W

*Stresses greater than those listed under "Absolute Maximum Ratings" may cause permanent damage to the device. This is a stress rating only, and functional operation of the device at these or any other conditions above those indicated in the operational sections of this specification is not implied. Exposure to absolute maximum rating conditions for extended periods may affect reliability.

DC ELECTRICAL CHARACTERISTICS AND OPERATING CONDITIONS

(Notes: 1, 6; notes appear on page 35) (0°C ≤ T_A ≤ +70°C; V_{DD}, $V_{DD}Q$ = +3.3V ±0.3V)

PARAMETER/CONDITION	SYMBOL	MIN	MAX	UNITS	NOTES
SUPPLY VOLTAGE	V_{DD}, $V_{DD}Q$	3	3.6	V	
INPUT HIGH VOLTAGE: Logic 1; All inputs	V_{IH}	2	V_{DD} + 0.3	V	22
INPUT LOW VOLTAGE: Logic 0; All inputs	V_{IL}	-0.3	0.8	V	22
INPUT LEAKAGE CURRENT: Any input 0V ≤ V_{IN} ≤ V_{DD} (All other pins not under test = 0V)	I_I	-5	5	µA	
OUTPUT LEAKAGE CURRENT: DQs are disabled; 0V ≤ V_{OUT} ≤ $V_{DD}Q$	I_{OZ}	-5	5	µA	
OUTPUT LEVELS: Output High Voltage (I_{OUT} = -4mA)	V_{OH}	2.4	–	V	
Output Low Voltage (I_{OUT} = 4mA)	V_{OL}	–	0.4	V	

I_{DD} SPECIFICATIONS AND CONDITIONS

(Notes: 1, 6, 11, 13, 33; notes appear on page 35)
(0°C ≤ T_A ≤ +70°C; V_{DD}, $V_{DD}Q$ = +3.3V ±0.3V)

PARAMETER/CONDITION		SYMBOL	MAX -7E	MAX -7G	MAX -75	MAX -8E	UNITS	NOTES
OPERATING CURRENT: Active Mode; Burst = 2; READ or WRITE; ^tRC = ^tRC (MIN); CAS latency = 3		I_{DD1}	125	125	115	95	mA	3, 18, 19, 32
STANDBY CURRENT: Power-Down Mode; All banks idle; CKE = LOW		I_{DD2}	2	2	2	2	mA	32
STANDBY CURRENT: Active Mode; CKE = HIGH; CS# = HIGH; All banks active after ^tRCD met; No accesses in progress		I_{DD3}	45	45	45	35	mA	3, 12, 19, 32
OPERATING CURRENT: Burst Mode; Continuous burst; READ or WRITE; All banks active; CAS latency = 3		I_{DD4}	150	150	140	120	mA	3, 18, 19, 32
AUTO REFRESH CURRENT: CKE = HIGH; CS# = HIGH	^tRFC = ^tRFC (MIN); CL = 3	I_{DD5}	230	230	210	190	mA	3, 12, 18, 19, 32, 34
	^tRFC = 15.625µs; CL = 3	I_{DD6}	3	3	3	3	mA	
SELF REFRESH CURRENT:	Standard	I_{DD7}	1	1	1	1	mA	4
CKE ≤ 0.2V	Low power (L)	I_{DD7}	0.5	0.5	0.5	0.5	mA	

Micron Technology, Inc., reserves the right to change products or specifications without notice.
©1999, Micron Technology, Inc.

CAPACITANCE

PARAMETER	SYMBOL	MIN	MAX	UNITS	NOTES
Input Capacitance: CLK	C_{I1}	2.5	3.5	pF	29
Input Capacitance: All other input-only pins	C_{I2}	2.5	3.8	pF	30
Input/Output Capacitance: DQs	C_{IO}	4.0	6.0	pF	31

ELECTRICAL CHARACTERISTICS AND RECOMMENDED AC OPERATING CONDITIONS

(Notes: 5, 6, 8, 9, 11, 33; notes appear on page 35) (0°C ≤ T_A ≤ +70°C)

AC CHARACTERISTICS			-7E		-75		-7G		-8E			
PARAMETER		SYMBOL	MIN	MAX	MIN	MAX	MIN	MAX	MIN	MAX	UNITS	NOTES
Access time from CLK (pos. edge)	CL = 3	^tAC		5.4		5.4		6		6	ns	27
	CL = 2	^tAC		5.4		6		–		6	ns	
Address hold time		^tAH	0.8		0.8		1		1		ns	
Address setup time		^tAS	1.5		1.5		2		2		ns	
CLK high-level width		^tCH	2.5		2.5		2.75		3		ns	
CLK low-level width		^tCL	2.5		2.5		2.75		3		ns	
Clock cycle time	CL = 3	^tCK	7		7.5		7		8		ns	23
	CL = 2	^tCK	7.5		10		–		10		ns	23
CKE hold time		^tCKH	0.8		0.8		1		1		ns	
CKE setup time		^tCKS	1.5		1.5		2		2		ns	
CS#, RAS#, CAS#, WE#, DQM hold time		^tCMH	0.8		0.8		1		1		ns	
CS#, RAS#, CAS#, WE#, DQM setup time		^tCMS	1.5		1.5		2		2		ns	
Data-in hold time		^tDH	0.8		0.8		1		1		ns	
Data-in setup time		^tDS	1.5		1.5		2		2		ns	
Data-out high-impedance time	CL = 3	^tHZ		5.4		5.4		6		6	ns	10
	CL = 2	^tHZ		5.4		6		–		7	ns	10
Data-out low-impedance time		^tLZ	1		1		1		1		ns	
Data-out hold time (load)		^tOH	2.7		2.7		2.5		3		ns	
Data-out hold time (no load)		^tOH_N	1.8		1.8		1.8		1.8		ns	28
ACTIVE to PRECHARGE command		^tRAS	37	120,000	44	120,000	42	120,000	50	120,000	ns	
ACTIVE to ACTIVE command period		^tRC	60		66		70		70		ns	
ACTIVE to READ or WRITE delay		^tRCD	15		20		21		20		ns	
Refresh period (4,096 rows)		^tREF		64		64		64		64	ms	
AUTO REFRESH period		^tRFC	66		66		70		70		ns	
PRECHARGE command period		^tRP	15		20		21		20		ns	
ACTIVE bank *a* to ACTIVE bank *b* command		^tRRD	14		15		14		20		ns	
Transition time		^tT	0.3	1.2	0.3	1.2	0.3	1.2	0.3	1.2	ns	7
WRITE recovery time		^tWR	1 CLK + 7ns		1 CLK + 7.5ns		1 CLK + 7ns		1 CLK + 7ns		–	24
			14		15		14		15		ns	25
Exit SELF REFRESH to ACTIVE command		^tXSR	67		75		77		80		ns	

Micron Technology, Inc., reserves the right to change products or specifications without notice.
©1999, Micron Technology, Inc.

AC FUNCTIONAL CHARACTERISTICS

(Notes: 5, 6, 7, 8, 9, 11; notes appear on page 35) (0°C ≤ T_A ≤ +70°C)

PARAMETER		SYMBOL	-7G	-7E	-7	-75	-8E	UNITS	NOTES
READ/WRITE command to READ/WRITE command		^tCCD	1	1	1	1	1	^tCK	17
CKE to clock disable or power-down entry mode		^tCKED	1	1	1	1	1	^tCK	14
CKE to clock enable or power-down exit setup mode		^tPED	1	1	1	1	1	^tCK	14
DQM to input data delay		^tDQD	0	0	0	0	0	^tCK	17
DQM to data mask during WRITEs		^tDQM	0	0	0	0	0	^tCK	17
DQM to data high-impedance during READs		^tDQZ	2	2	2	2	2	^tCK	17
WRITE command to input data delay		^tDWD	0	0	0	0	0	^tCK	17
Data-in to ACTIVE command		^tDAL	5	4	4	5	4	^tCK	15, 21
Data-in to PRECHARGE command		^tDPL	2	2	2	2	2	^tCK	16, 21
Last data-in to burst STOP command		^tBDL	1	1	1	1	1	^tCK	17
Last data-in to new READ/WRITE command		^tCDL	1	1	1	1	1	^tCK	17
Last data-in to PRECHARGE command		^tRDL	2	2	2	2	2	^tCK	16, 21
LOAD MODE REGISTER command to ACTIVE or REFRESH command		^tMRD	2	2	2	2	2	^tCK	26
Data-out to high-impedance from PRECHARGE command	CL = 3	^tROH	3	3	3	3	3	^tCK	17
	CL = 2	^tROH	2	2	2	2	2	^tCK	17

Micron Technology, Inc., reserves the right to change products or specifications without notice.
©1999, Micron Technology, Inc.

NOTES

1. All voltages referenced to V_{SS}.
2. This parameter is sampled. V_{DD}, $V_{DD}Q$ = +3.3V; f = 1 MHz, T_A = 25°C; pin under test biased at 1.4V.
3. I_{DD} is dependent on output loading and cycle rates. Specified values are obtained with minimum cycle time and the outputs open.
4. Enables on-chip refresh and address counters.
5. The minimum specifications are used only to indicate cycle time at which proper operation over the full temperature range (0°C ≤ T_A ≤ +70°C) is ensured.
6. An initial pause of 100µs is required after power-up, followed by two AUTO REFRESH commands, before proper device operation is ensured. (V_{DD} and $V_{DD}Q$ must be powered up simultaneously. V_{SS} and $V_{SS}Q$ must be at same potential.) The two AUTO REFRESH command wake-ups should be repeated any time the ^tREF refresh requirement is exceeded.
7. AC characteristics assume ^tT = 1ns.
8. In addition to meeting the transition rate specification, the clock and CKE must transit between V_{IH} and V_{IL} (or between V_{IL} and V_{IH}) in a monotonic manner.
9. Outputs measured at 1.5V with equivalent load:

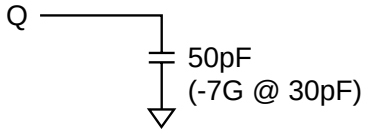

10. ^tHZ defines the time at which the output achieves the open circuit condition; it is not a reference to V_{OH} or V_{OL}. The last valid data element will meet ^tOH before going High-Z.
11. AC timing and I_{DD} tests have V_{IL} = 0V and V_{IH} = 3V, with timing referenced to 1.5V crossover point. If the input transition time is longer than 1ns, then the timing is referenced at V_{IL} (MAX) and V_{IL} (MIN) and no longer at the 1.5V crossover point.
12. Other input signals are allowed to transition no more than once every two clocks and are otherwise at valid V_{IH} or V_{IL} levels.
13. I_{DD} specifications are tested after the device is properly initialized.
14. Timing actually specified by ^tCKS; clock(s) specified as a reference only at minimum cycle rate.
15. Timing actually specified by ^tWR plus ^tRP; clock(s) specified as a reference only at minimum cycle rate.
16. Timing actually specified by ^tWR.
17. Required clocks are specified by JEDEC functionality and are not dependent on any timing parameter.
18. The I_{DD} current will decrease as the CAS latency is reduced. This is due to the fact that the maximum cycle rate is slower as the CAS latency is reduced.
19. Address transitions average one transition every two clocks.
20. CLK must be toggled a minimum of two times during this period.
21. Based on ^tCK = 143 MHz for -7E/-7G, 133 MHz for -75 and 100 MHz for -8E.
22. V_{IH} overshoot: V_{IH} (MAX) = $V_{DD}Q$ + 2V for a pulse width ≤ 3ns, and the pulse width cannot be greater than one third of the cycle rate. V_{IL} undershoot: V_{IL} (MIN) = -2V for a pulse width ≤ 3ns.
23. The clock frequency must remain constant (stable clock is defined as a signal cycling within timing constraints specified for the clock pin) during access or precharge states (READ, WRITE, including ^tWR, and PRECHARGE commands). CKE may be used to reduce the data rate.
24. Auto precharge mode only. The precharge timing budget (^tRP) begins 7.5ns/7ns after the first clock delay, after the last WRITE is executed.
25. Precharge mode only.
26. JEDEC and PC100 specify three clocks.
27. ^tAC for -7E/-75 at CL = 3 with no load is 4.6ns and is guaranteed by design.
28. Parameter guaranteed by design.
29. PC100 specifies a maximum of 4pF.
30. PC100 specifies a maximum of 5pF.
31. PC100 specifies a maximum of 6.5pF.
32. ^tCK = 7ns for -7E/-7G, 7.5ns for -75 and 10ns for -8E.
33. For -7G, V_{DD} (MIN) = 3.15V, T_A (MAX) = 55°C.
34. CKE is HIGH during refresh command period (^tRFC [MIN]) else CKE is LOW. The I_{DD6} limit is actually a nominal value and does not result in a fail value.

Micron Technology, Inc., reserves the right to change products or specifications without notice.
©1999, Micron Technology, Inc.

INITIALIZE AND LOAD MODE REGISTER [1]

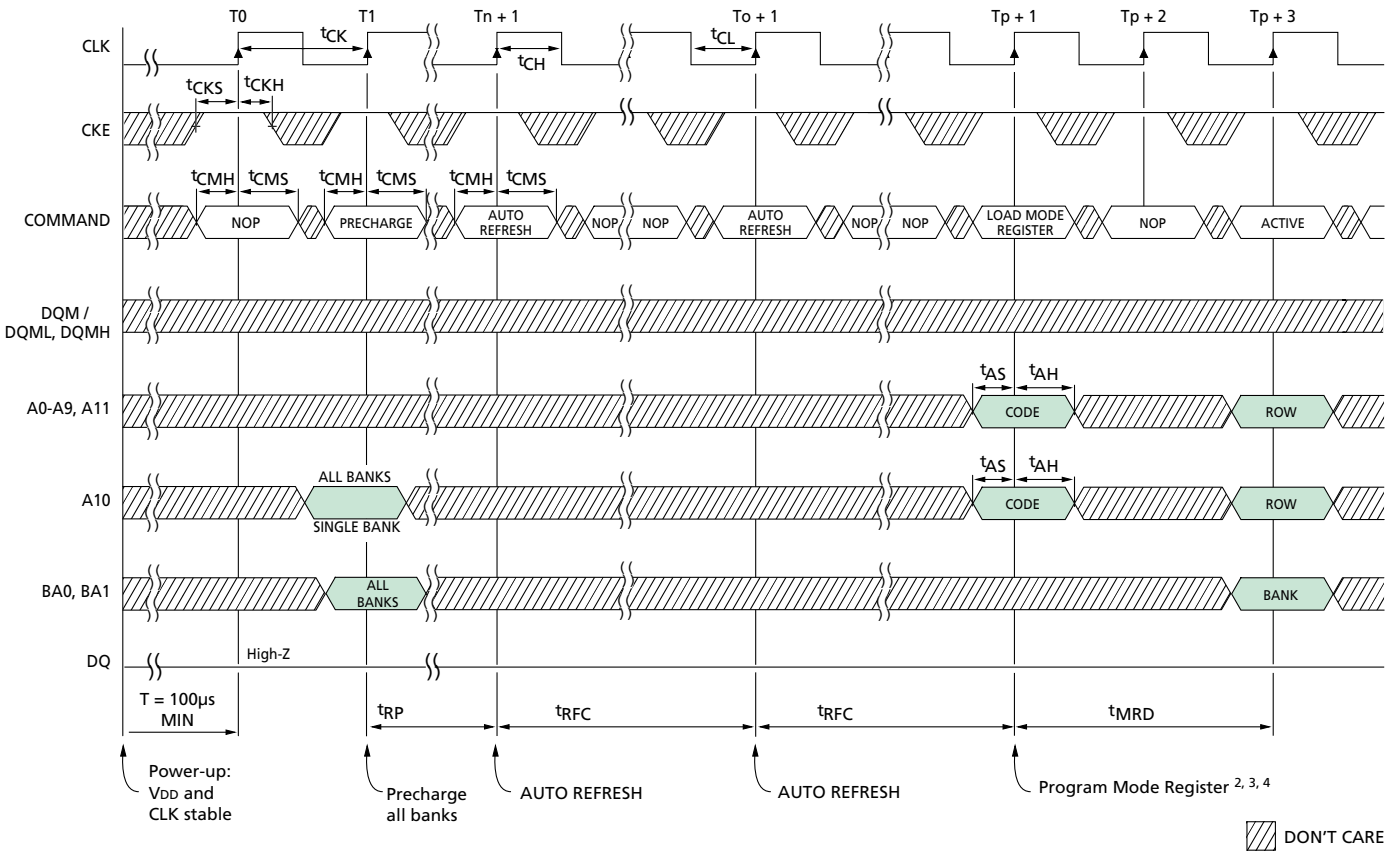

TIMING PARAMETERS

SYMBOL*	-7E MIN	-7E MAX	-75 MIN	-75 MAX	-8E MIN	-8E MAX	UNITS
tAH	0.8		0.8		1		ns
tAS	1.5		1.5		2		ns
tCH	2.5		2.5		3		ns
tCL	2.5		2.5		3		ns
tCK (3)	7		7.5		8		ns
tCK (2)	7.5		10		10		ns
tCKH	0.8		0.8		1		ns

SYMBOL*	-7E MIN	-7E MAX	-75 MIN	-75 MAX	-8E MIN	-8E MAX	UNITS
tCKS	1.5		1.5		2		ns
tCMH	0.8		0.8		1		ns
tCMS	1.5		1.5		2		ns
tMRD[3]	2		2		2		tCK
tRFC	66		66		70		ns
tRP	15		20		20		ns

*CAS latency indicated in parentheses.

NOTE:
1. If CS# is HIGH at clock HIGH time, all commands applied are NOP, with CKE a "Don't Care."
2. The mode register may be loaded prior to the AUTO REFRESH cycles if desired.
3. JEDEC and PC100 specify three clocks.
4. Outputs are guaranteed High-Z after command is issued.

Micron Technology, Inc., reserves the right to change products or specifications without notice.
©1999, Micron Technology, Inc.

POWER-DOWN MODE [1]

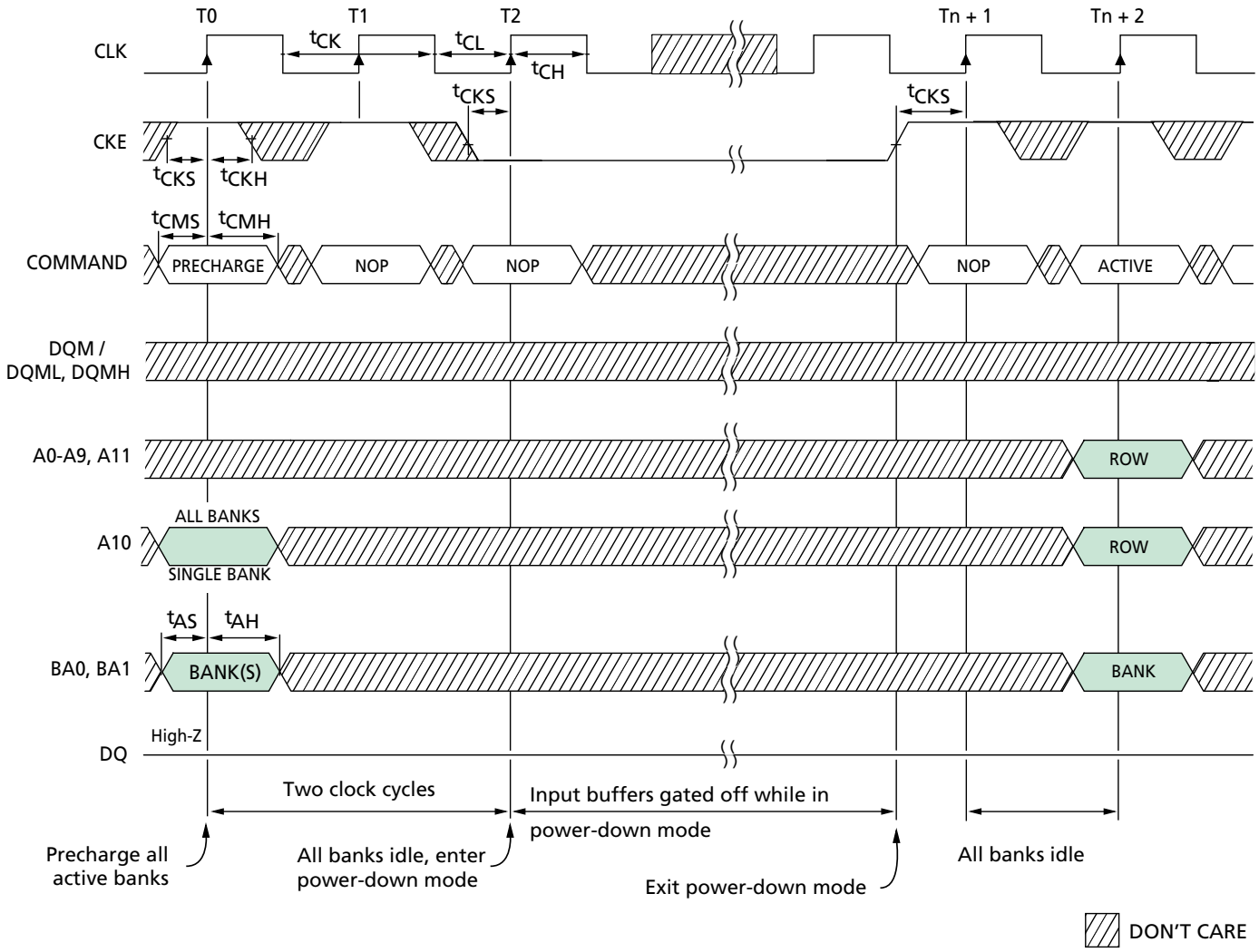

TIMING PARAMETERS

SYMBOL*	-7E MIN	-7E MAX	-75 MIN	-75 MAX	-8E MIN	-8E MAX	UNITS
tAH	0.8		0.8		1		ns
tAS	1.5		1.5		2		ns
tCH	2.5		2.5		3		ns
tCL	2.5		2.5		3		ns
tCK (3)	7		7.5		8		ns

SYMBOL*	-7E MIN	-7E MAX	-75 MIN	-75 MAX	-8E MIN	-8E MAX	UNITS
tCK (2)	7.5		10		10		ns
tCKH	0.8		0.8		1		ns
tCKS	1.5		1.5		2		ns
tCMH	0.8		0.8		1		ns
tCMS	1.5		1.5		2		ns

*CAS latency indicated in parentheses.

NOTE: 1. Violating refresh requirements during power-down may result in a loss of data.

Micron Technology, Inc., reserves the right to change products or specifications without notice.
©1999, Micron Technology, Inc.

CLOCK SUSPEND MODE [1]

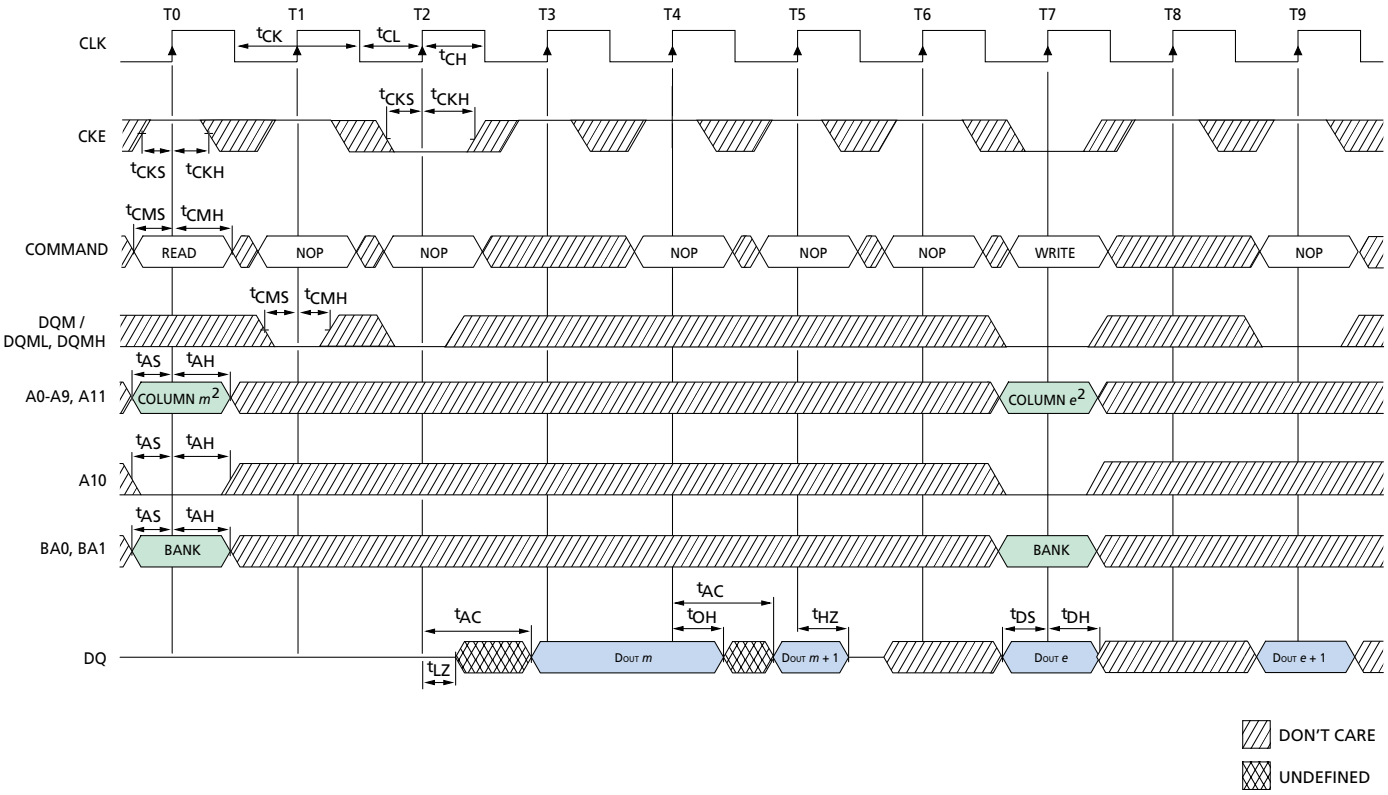

TIMING PARAMETERS

SYMBOL*	-7E MIN	-7E MAX	-75 MIN	-75 MAX	-8E MIN	-8E MAX	UNITS
tAC (3)		5.4		5.4		6	ns
tAC (2)		5.4		6		6	ns
tAH	0.8		0.8		1		ns
tAS	1.5		1.5		2		ns
tCH	2.5		2.5		3		ns
tCL	2.5		2.5		3		ns
tCK (3)	7		7.5		8		ns
tCK (2)	7.5		10		10		ns
tCKH	0.8		0.8		1		ns

SYMBOL*	-7E MIN	-7E MAX	-75 MIN	-75 MAX	-8E MIN	-8E MAX	UNITS
tCKS	1.5		1.5		2		ns
tCMH	0.8		0.8		1		ns
tCMS	1.5		1.5		2		ns
tDH	0.8		0.8		1		ns
tDS	1.5		1.5		2		ns
tHZ (3)		5.4		5.4		6	ns
tHZ (2)		5.4		6		7	ns
tLZ	1		1		1		ns
tOH	2.7		2.7		3		ns

*CAS latency indicated in parentheses.

NOTE: 1. For this example, the burst length = 2, the CAS latency = 3, and auto precharge is disabled.
2. x16: A8, A9 and A11 = "Don't Care"
x8: A9 and A11 = "Don't Care"
x4: A11 = "Don't Care"

Micron Technology, Inc., reserves the right to change products or specifications without notice.
©1999, Micron Technology, Inc.

AUTO REFRESH MODE

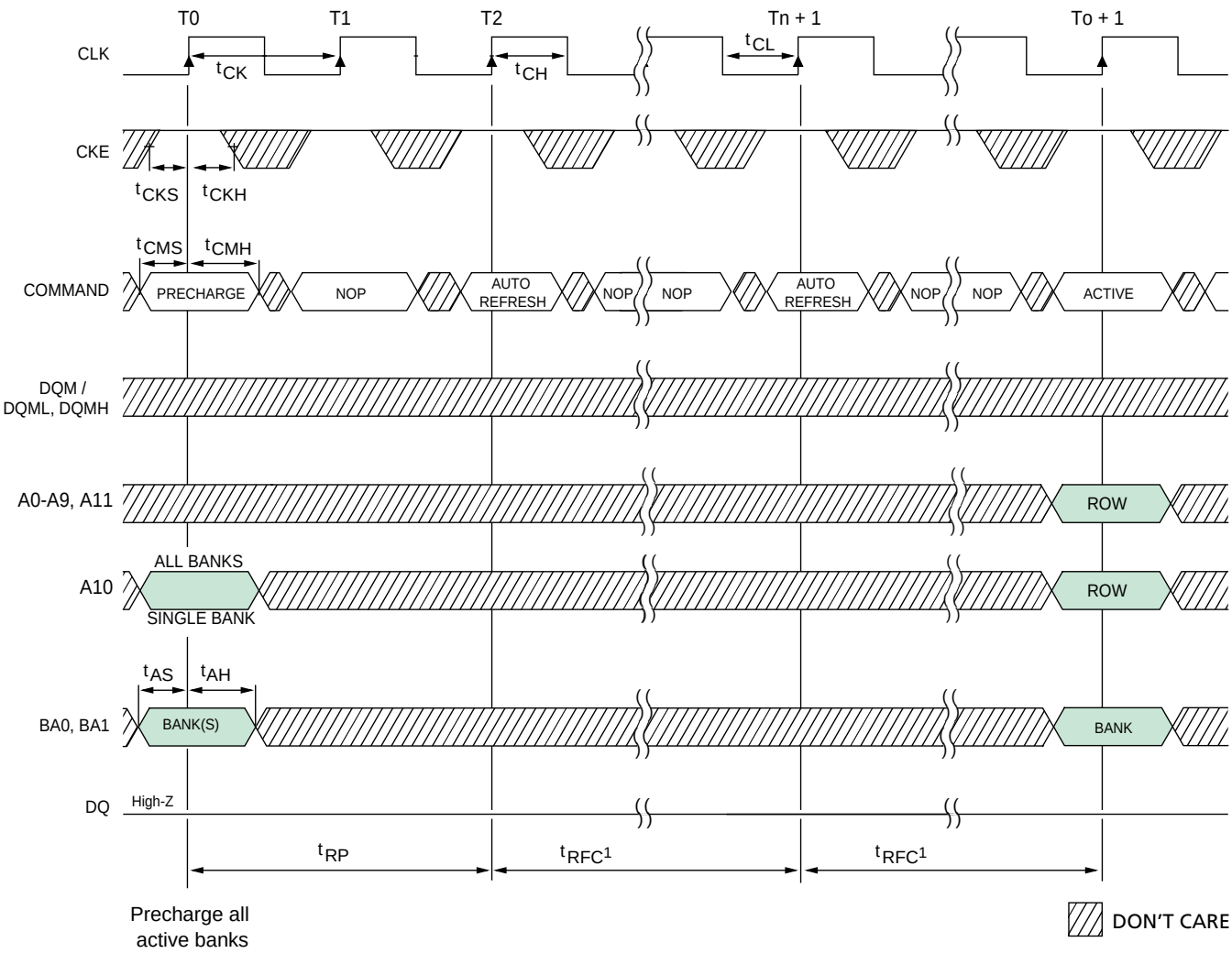

TIMING PARAMETERS

	-7E		-75		-8E		
SYMBOL*	MIN	MAX	MIN	MAX	MIN	MAX	UNITS
^{t}AH	0.8		0.8		1		ns
^{t}AS	1.5		1.5		2		ns
^{t}CH	2.5		2.5		3		ns
^{t}CL	2.5		2.5		3		ns
^{t}CK (3)	7		7.5		8		ns
^{t}CK (2)	7.5		10		10		ns

	-7E		-75		-8E		
SYMBOL*	MIN	MAX	MIN	MAX	MIN	MAX	UNITS
^{t}CKH	0.8		0.8		1		ns
^{t}CKS	1.5		1.5		2		ns
^{t}CMH	0.8		0.8		1		ns
^{t}CMS	1.5		1.5		2		ns
^{t}RFC	66		66		70		ns
^{t}RP	15		20		20		ns

*CAS latency indicated in parentheses.

NOTE: 1. Each AUTO REFRESH command performs a refresh cycle. Back-to-back commands are not required.

Micron Technology, Inc., reserves the right to change products or specifications without notice.
©1999, Micron Technology, Inc.

SELF REFRESH MODE

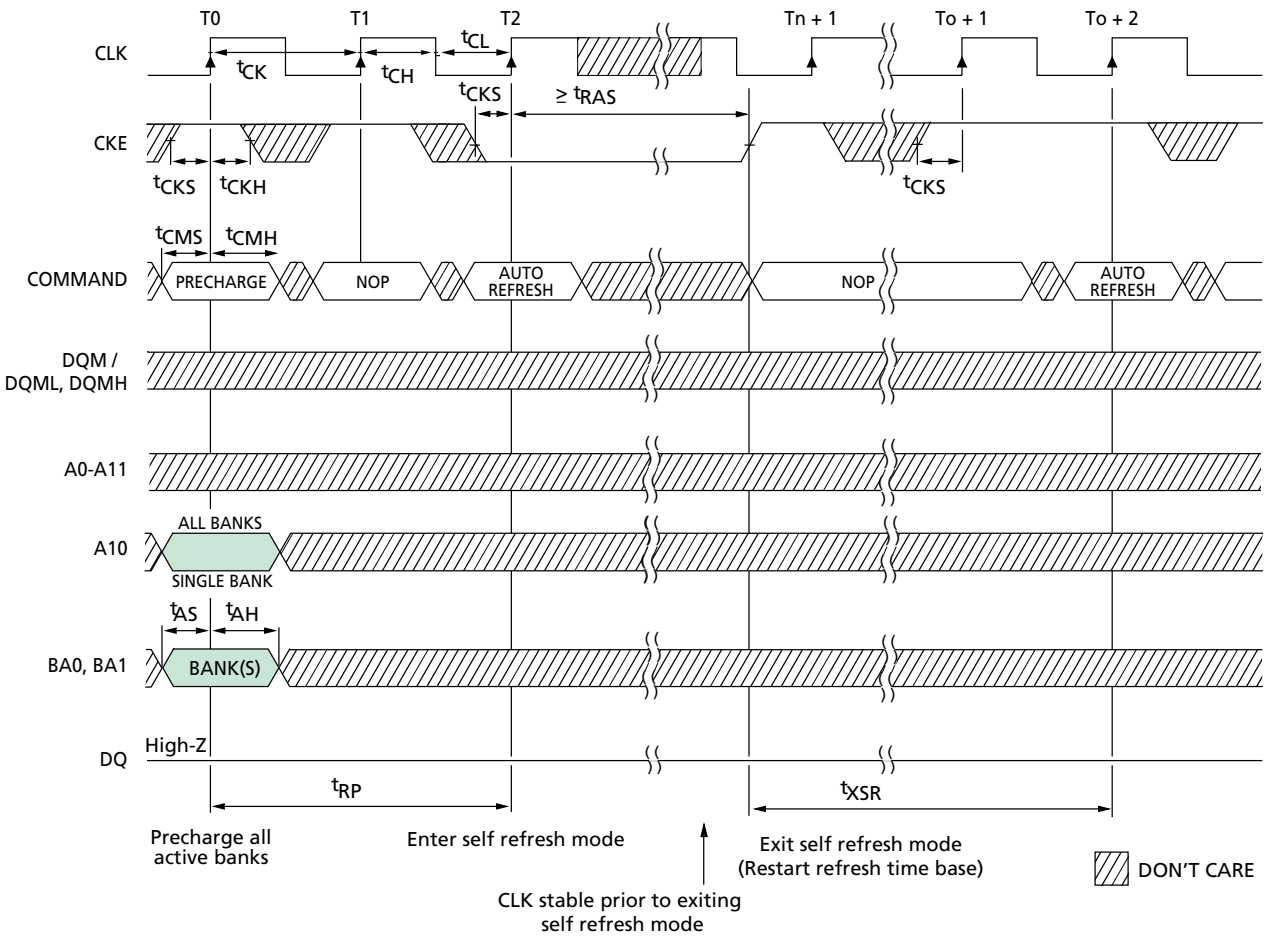

TIMING PARAMETERS

SYMBOL*	-7E MIN	-7E MAX	-75 MIN	-75 MAX	-8E MIN	-8E MAX	UNITS
tAH	0.8		0.8		1		ns
tAS	1.5		1.5		2		ns
tCH	2.5		2.5		3		ns
tCL	2.5		2.5		3		ns
tCK (3)	7		7.5		8		ns
tCK (2)	7.5		10		10		ns
tCKH	0.8		0.8		1		ns

SYMBOL*	-7E MIN	-7E MAX	-75 MIN	-75 MAX	-8E MIN	-8E MAX	UNITS
tCKS	1.5		1.5		2		ns
tCMH	0.8		0.8		1		ns
tCMS	1.5		1.5		2		ns
tRAS	37	120,000	44	120,000	50	120,000	ns
tRP	15		20		20		ns
tXSR	67		75		80		ns

*CAS latency indicated in parentheses.

Micron Technology, Inc., reserves the right to change products or specifications without notice.
©1999, Micron Technology, Inc.

READ – WITHOUT AUTO PRECHARGE [1]

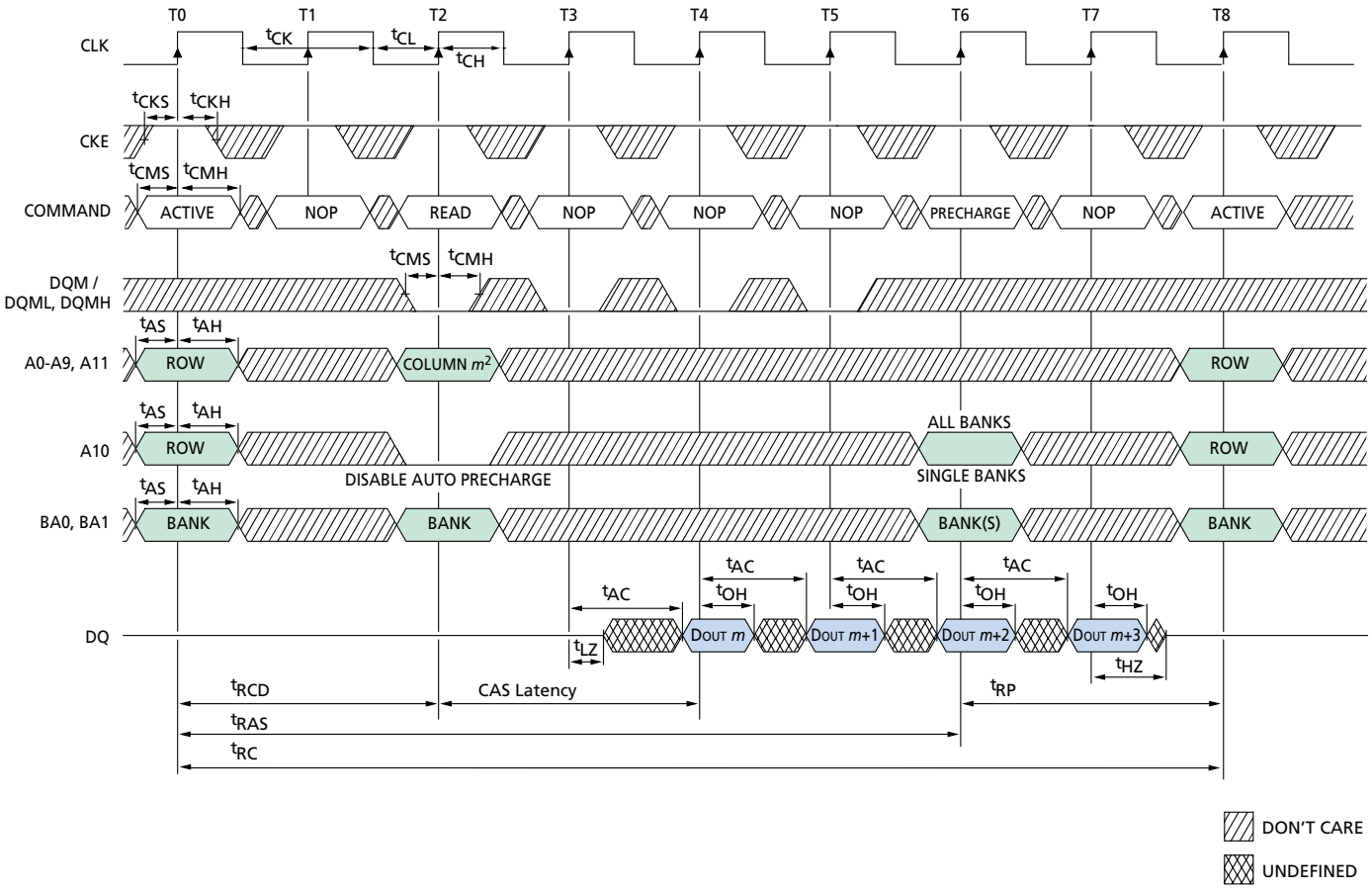

TIMING PARAMETERS

SYMBOL*	-7E MIN	-7E MAX	-75 MIN	-75 MAX	-8E MIN	-8E MAX	UNITS
tAC (3)		5.4		5.4		6	ns
tAC (2)		5.4		6		6	ns
tAH	0.8		0.8		1		ns
tAS	1.5		1.5		2		ns
tCH	2.5		2.5		3		ns
tCL	2.5		2.5		3		ns
tCK (3)	7		7.5		8		ns
tCK (2)	7.5		10		10		ns
tCKH	0.8		0.8		1		ns
tCKS	1.5		1.5		2		ns

SYMBOL*	-7E MIN	-7E MAX	-75 MIN	-75 MAX	-8E MIN	-8E MAX	UNITS
tCMH	0.8		0.8		1		ns
tCMS	1.5		1.5		2		ns
tHZ (3)		5.4		5.4		6	ns
tHZ (2)		5.4		6		7	ns
tLZ	1		1		1		ns
tOH	2.7		2.7		3		ns
tRAS	37	120,000	44	120,000	50	120,000	ns
tRC	60		66		70		ns
tRCD	15		20		20		ns
tRP	15		20		20		ns

*CAS latency indicated in parentheses.

NOTE: 1. For this example, the burst length = 4, the CAS latency = 2, and the READ burst is followed by a "manual" PRECHARGE.
2. x16: A8, A9 and A11 = "Don't Care"
x8: A9 and A11 = "Don't Care"
x4: A11 = "Don't Care"

Micron Technology, Inc., reserves the right to change products or specifications without notice.
©1999, Micron Technology, Inc.

READ – WITH AUTO PRECHARGE [1]

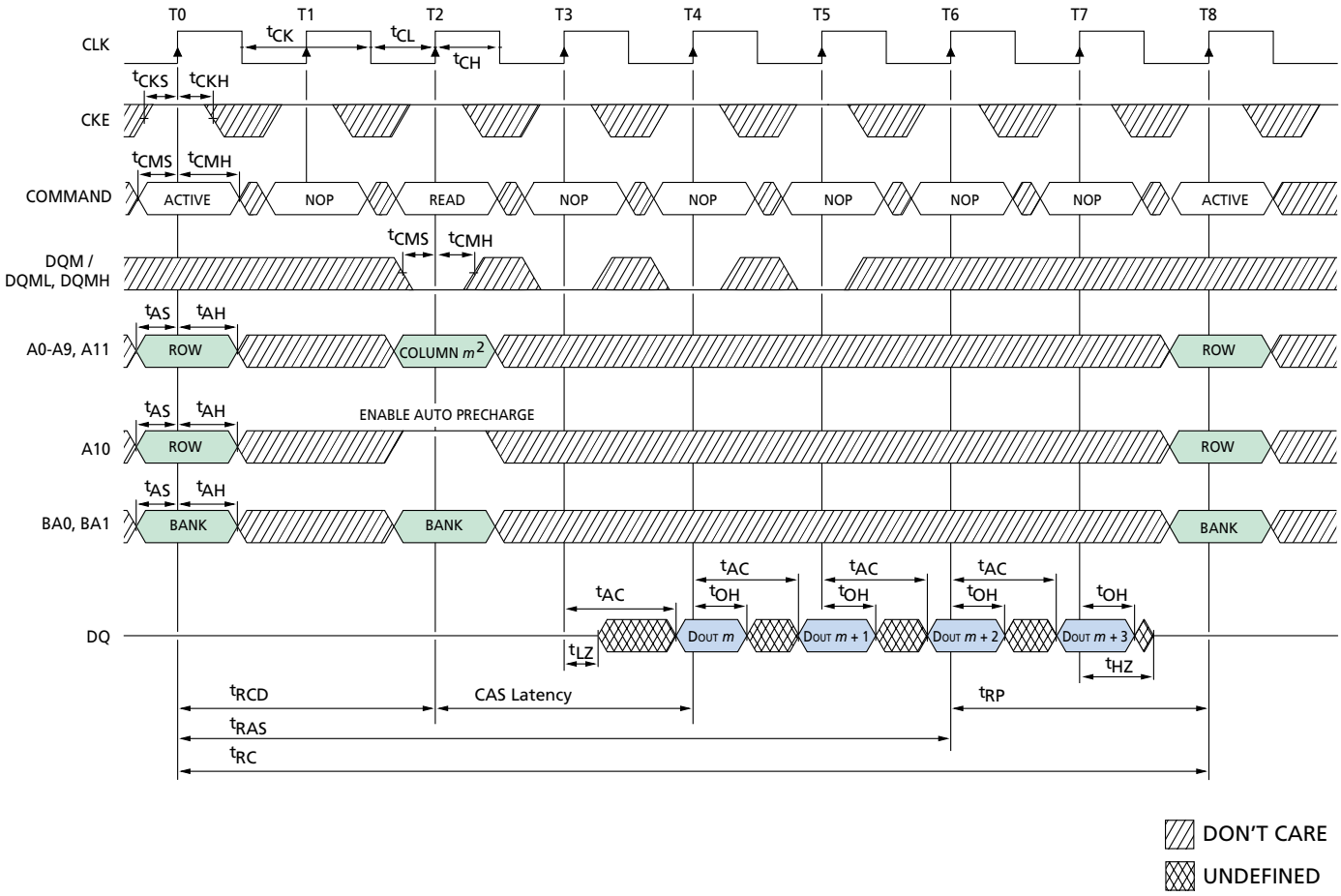

TIMING PARAMETERS

SYMBOL*	-7E MIN	-7E MAX	-75 MIN	-75 MAX	-8E MIN	-8E MAX	UNITS
tAC (3)		5.4		5.4		6	ns
tAC (2)		5.4		6		6	ns
tAH	0.8		0.8		1		ns
tAS	1.5		1.5		2		ns
tCH	2.5		2.5		3		ns
tCL	2.5		2.5		3		ns
tCK (3)	7		7.5		8		ns
tCK (2)	7.5		10		10		ns
tCKH	0.8		0.8		1		ns
tCKS	1.5		1.5		2		ns

SYMBOL*	-7E MIN	-7E MAX	-75 MIN	-75 MAX	-8E MIN	-8E MAX	UNITS
tCMH	0.8		0.8		1		ns
tCMS	1.5		1.5		2		ns
tHZ (3)		5.4		5.4		6	ns
tHZ (2)		5.4		6		7	ns
tLZ	1		1		1		ns
tOH	2.7		2.7		3		ns
tRAS	37	120,000	44	120,000	50	120,000	ns
tRC	60		66		70		ns
tRCD	15		20		20		ns
tRP	15		20		20		ns

*CAS latency indicated in parentheses.

NOTE: 1. For this example, the burst length = 4, and the CAS latency = 2.
2. x16: A8, A9 and A11 = "Don't Care"
x8: A9 and A11 = "Don't Care"
x4: A11 = "Don't Care"

Micron Technology, Inc., reserves the right to change products or specifications without notice.
©1999, Micron Technology, Inc.

SINGLE READ – WITHOUT AUTO PRECHARGE [1]

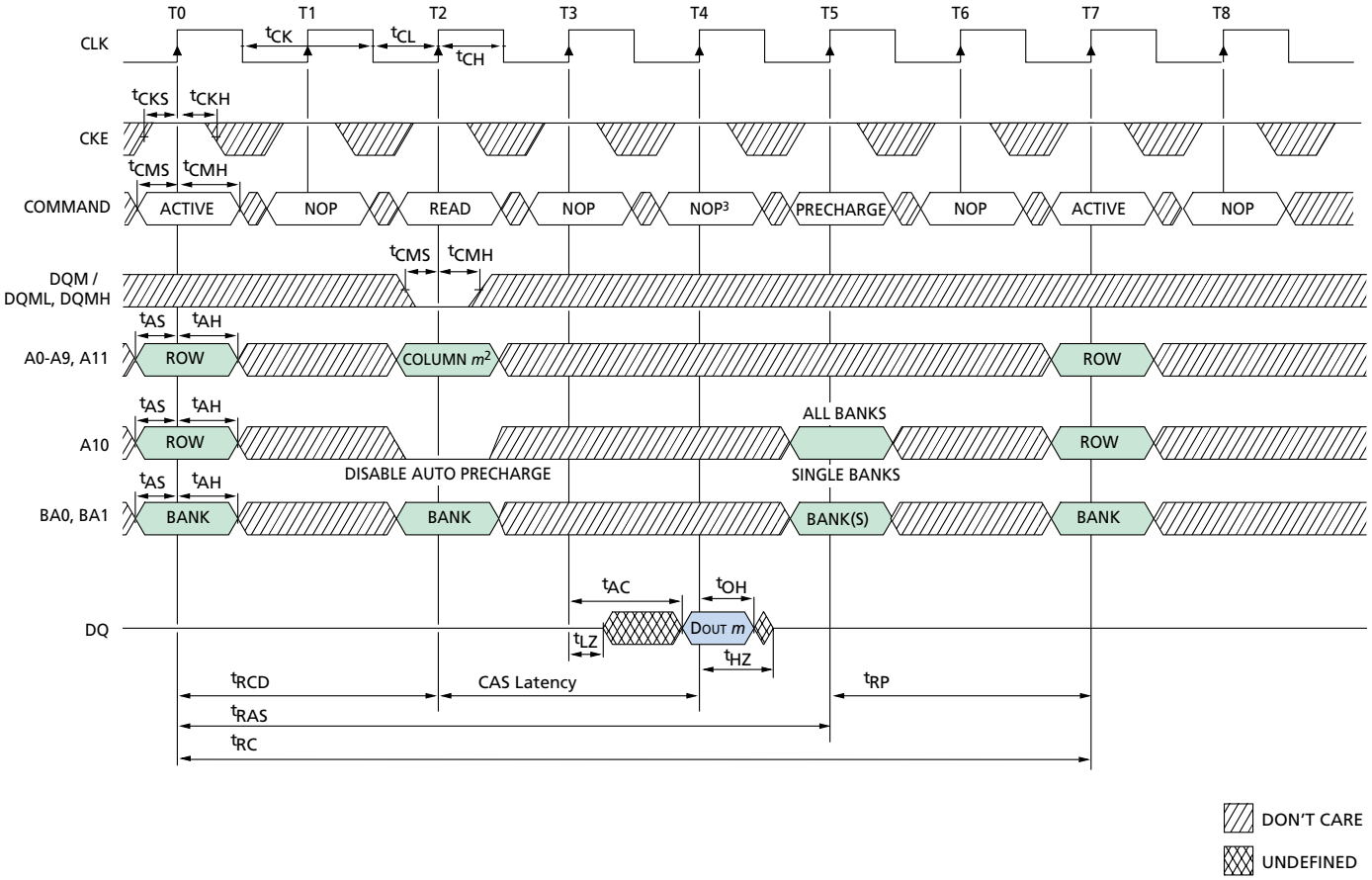

TIMING PARAMETERS

SYMBOL*	-7E MIN	-7E MAX	-75 MIN	-75 MAX	-8E MIN	-8E MAX	UNITS
tAC (3)		5.4		5.4		6	ns
tAC (2)		5.4		6		6	ns
tAH	0.8		0.8		1		ns
tAS	1.5		1.5		2		ns
tCH	2.5		2.5		3		ns
tCL	2.5		2.5		3		ns
tCK (3)	7		7.5		8		ns
tCK (2)	7.5		10		10		ns
tCKH	0.8		0.8		1		ns
tCKS	1.5		1.5		2		ns

SYMBOL*	-7E MIN	-7E MAX	-75 MIN	-75 MAX	-8E MIN	-8E MAX	UNITS
tCMH	0.8		0.8		1		ns
tCMS	1.5		1.5		2		ns
tHZ (3)		5.4		5.4		6	ns
tHZ (2)		5.4		6		7	ns
tLZ	1		1		1		ns
tOH	2.7		2.7		3		ns
tRAS	37	120,000	44	120,000	50	120,000	ns
tRC	60		66		70		ns
tRCD	15		20		20		ns
tRP	15		20		20		ns

*CAS latency indicated in parentheses.

NOTE: 1. For this example, the burst length = 1, the CAS latency = 2, and the READ burst is followed by a "manual" PRECHARGE.
2. x16: A8, A9 and A11 = "Don't Care"
x8: A9 and A11 = "Don't Care"
x4: A11 = "Don't Care"
3. PRECHARGE command not allowed else tRAS would be violated.

Micron Technology, Inc., reserves the right to change products or specifications without notice.
©1999, Micron Technology, Inc.

SINGLE READ – WITH AUTO PRECHARGE [1]

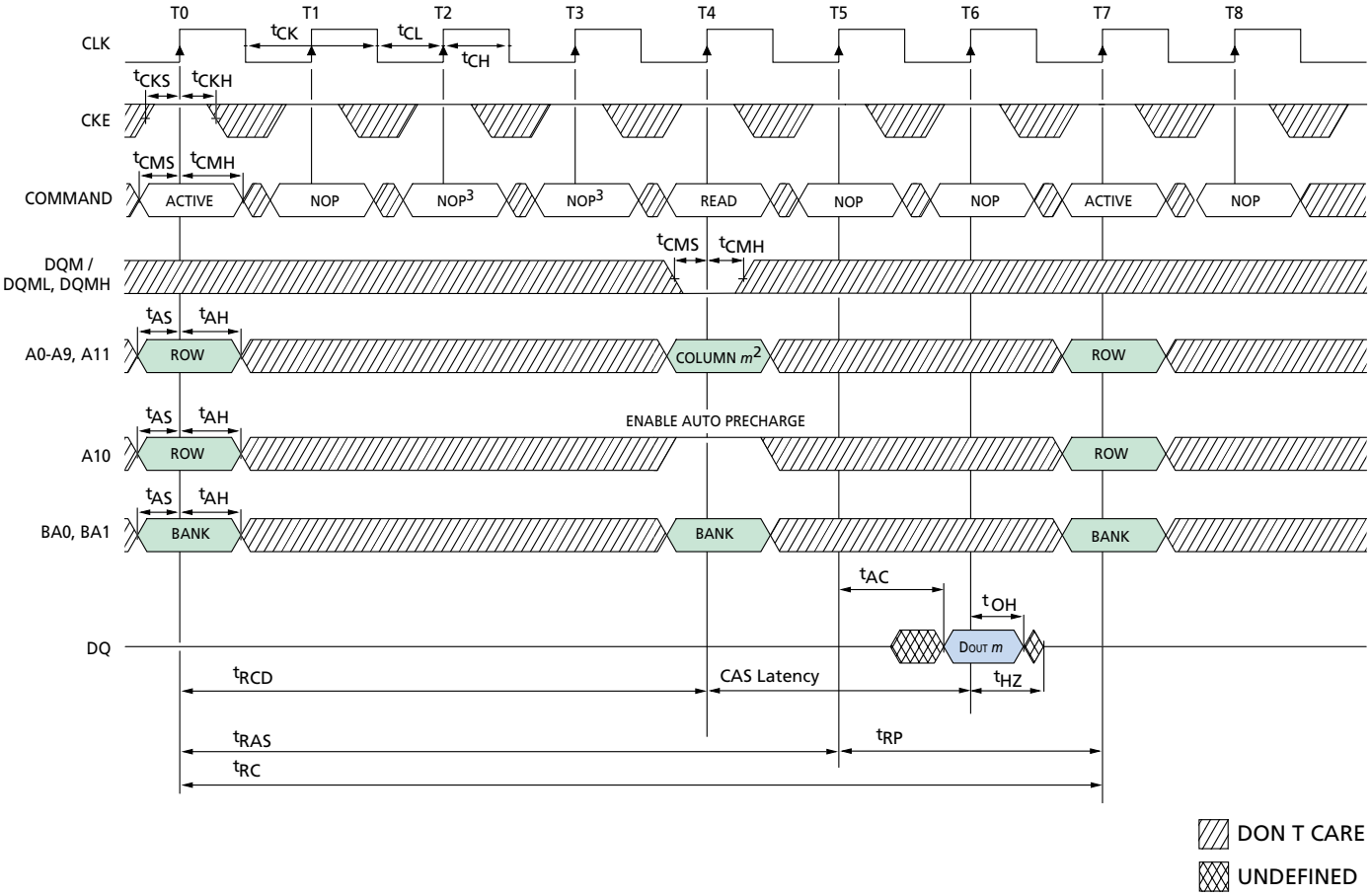

TIMING PARAMETERS

SYMBOL*	-7E MIN	-7E MAX	-75 MIN	-75 MAX	-8E MIN	-8E MAX	UNITS
tAC (3)		5.4		5.4		6	ns
tAC (2)		5.4		6		6	ns
tAH	0.8		0.8		1		ns
tAS	1.5		1.5		2		ns
tCH	2.5		2.5		3		ns
tCL	2.5		2.5		3		ns
tCK (3)	7		7.5		8		ns
tCK (2)	7.5		10		10		ns
tCKH	0.8		0.8		1		ns
tCKS	1.5		1.5		2		ns

SYMBOL*	-7E MIN	-7E MAX	-75 MIN	-75 MAX	-8E MIN	-8E MAX	UNITS
tCMH	0.8		0.8		1		ns
tCMS	1.5		1.5		2		ns
tHZ (3)		5.4		5.4		6	ns
tHZ (2)		5.4		6		7	ns
tLZ	1		1		1		ns
tOH	2.7		2.7		3		ns
tRAS	37	120,000	44	120,000	50	120,000	ns
tRC	60		66		70		ns
tRCD	15		20		20		ns
tRP	15		20		20		ns

*CAS latency indicated in parentheses.

NOTE: 1. For this example, the burst length = 1, and the CAS latency = 2.
2. x16: A8, A9 and A11 = "Don't Care"
x8: A9 and A11 = "Don't Care"
x4: A11 = "Don't Care"
3. READ command not allowed else tRAS would be violated.

Micron Technology, Inc., reserves the right to change products or specifications without notice.
©1999, Micron Technology, Inc.

ALTERNATING BANK READ ACCESSES [1]

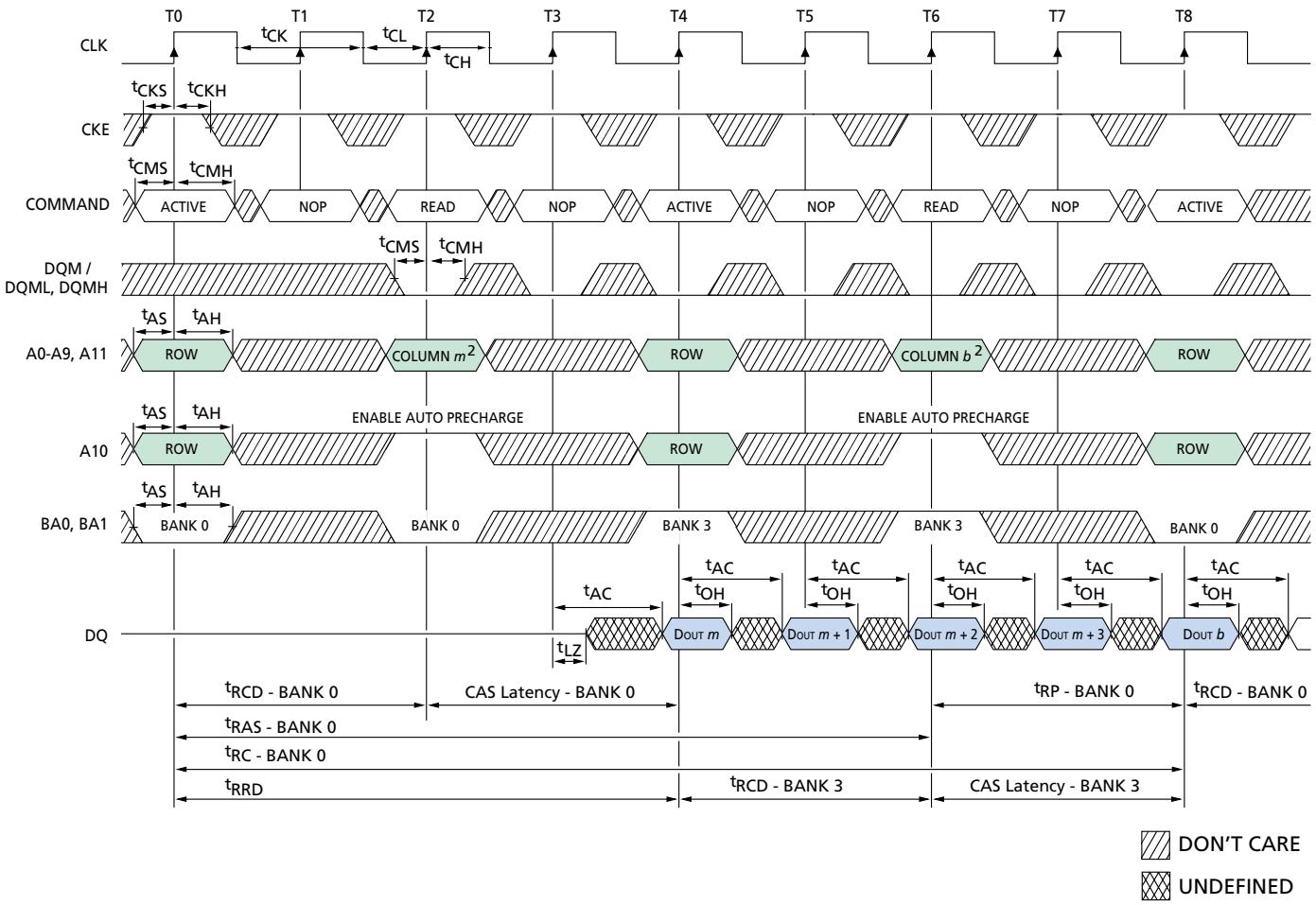

TIMING PARAMETERS

SYMBOL*	-7E MIN	-7E MAX	-75 MIN	-75 MAX	-8E MIN	-8E MAX	UNITS
tAC (3)		5.4		5.4		6	ns
tAC (2)		5.4		6		6	ns
tAH	0.8		0.8		1		ns
tAS	1.5		1.5		2		ns
tCH	2.5		2.5		3		ns
tCL	2.5		2.5		3		ns
tCK (3)	7		7.5		8		ns
tCK (2)	7.5		10		10		ns
tCKH	0.8		0.8		1		ns
tCKS	1.5		1.5		2		ns

SYMBOL*	-7E MIN	-7E MAX	-75 MIN	-75 MAX	-8E MIN	-8E MAX	UNITS
tCMH	0.8		0.8		1		ns
tCMS	1.5		1.5		2		ns
tLZ	1		1		1		ns
tOH	2.7		2.7		3		ns
tRAS	37	120,000	44	120,000	50	120,000	ns
tRC	60		66		70		ns
tRCD	15		20		20		ns
tRP	15		20		20		ns
tRRD	14		15		20		ns

*CAS latency indicated in parentheses.

NOTE: 1. For this example, the burst length = 4, and the CAS latency = 2.
2. x16: A8, A9 and A11 = "Don't Care"
x8: A9 and A11 = "Don't Care"
x4: A11 = "Don't Care"

Micron Technology, Inc., reserves the right to change products or specifications without notice.
©1999, Micron Technology, Inc.

READ – FULL-PAGE BURST [1]

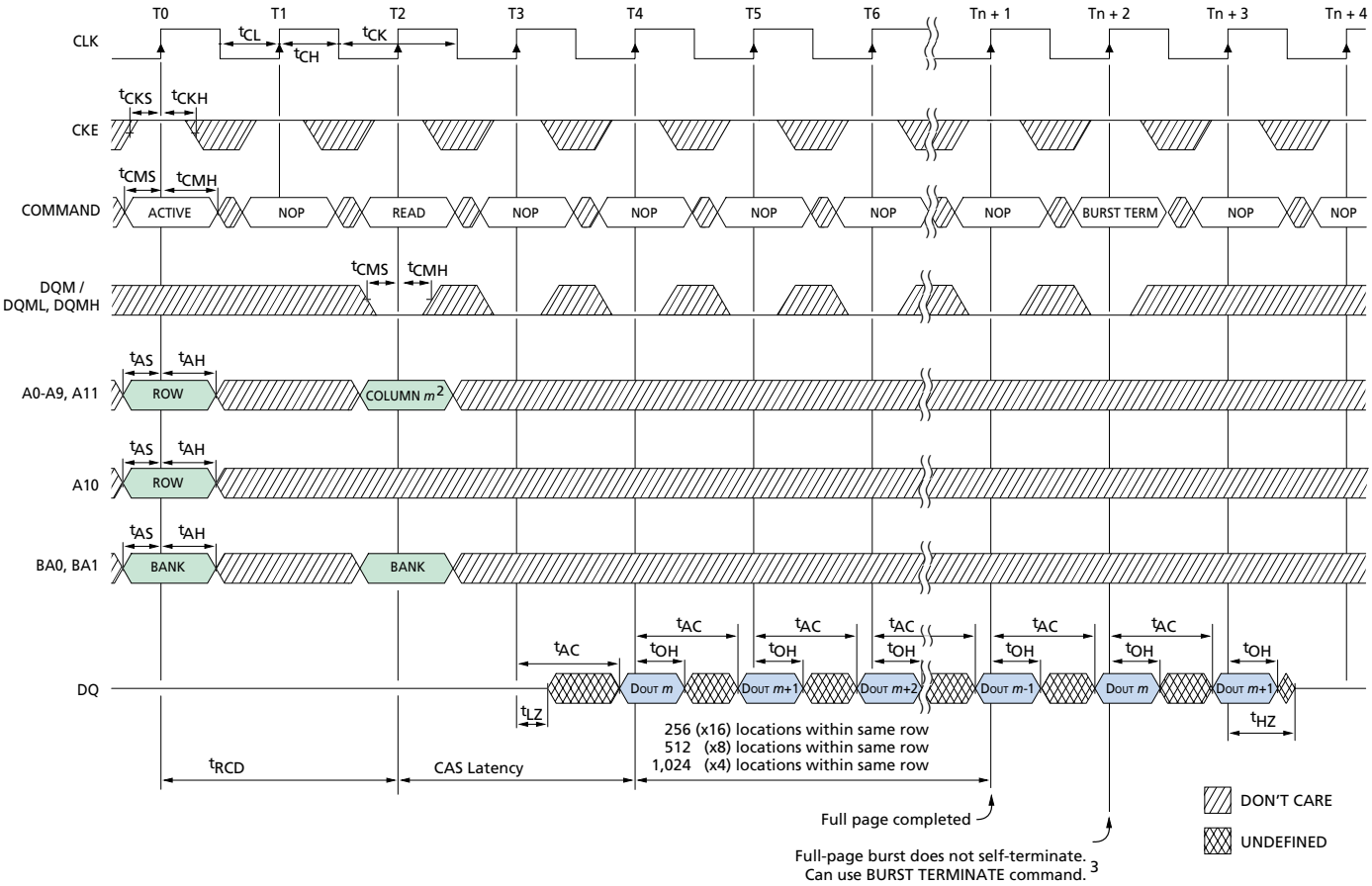

TIMING PARAMETERS

SYMBOL*	-7E MIN	-7E MAX	-75 MIN	-75 MAX	-8E MIN	-8E MAX	UNITS
^{t}AC (3)		5.4		5.4		6	ns
^{t}AC (2)		5.4		6		6	ns
^{t}AH	0.8		0.8		1		ns
^{t}AS	1.5		1.5		2		ns
^{t}CH	2.5		2.5		3		ns
^{t}CL	2.5		2.5		3		ns
^{t}CK (3)	7		7.5		8		ns
^{t}CK (2)	7.5		10		10		ns
^{t}CKH	0.8		0.8		1		ns

SYMBOL*	-7E MIN	-7E MAX	-75 MIN	-75 MAX	-8E MIN	-8E MAX	UNITS
^{t}CKS	1.5		1.5		2		ns
^{t}CMH	0.8		0.8		1		ns
^{t}CMS	1.5		1.5		2		ns
^{t}HZ (3)		5.4		5.4		6	ns
^{t}HZ (2)		5.4		6		7	ns
^{t}LZ	1		1		1		ns
^{t}OH	2.7		2.7		3		ns
^{t}RCD	15		20		20		ns

*CAS latency indicated in parentheses.

NOTE: 1. For this example, the CAS latency = 2.
2. x16: A8, A9 and A11 = "Don't Care"
x8: A9 and A11 = "Don't Care"
x4: A11 = "Don't Care"
3. Page left open; no ^{t}RP.

Micron Technology, Inc., reserves the right to change products or specifications without notice.
©1999, Micron Technology, Inc.

READ – DQM OPERATION [1]

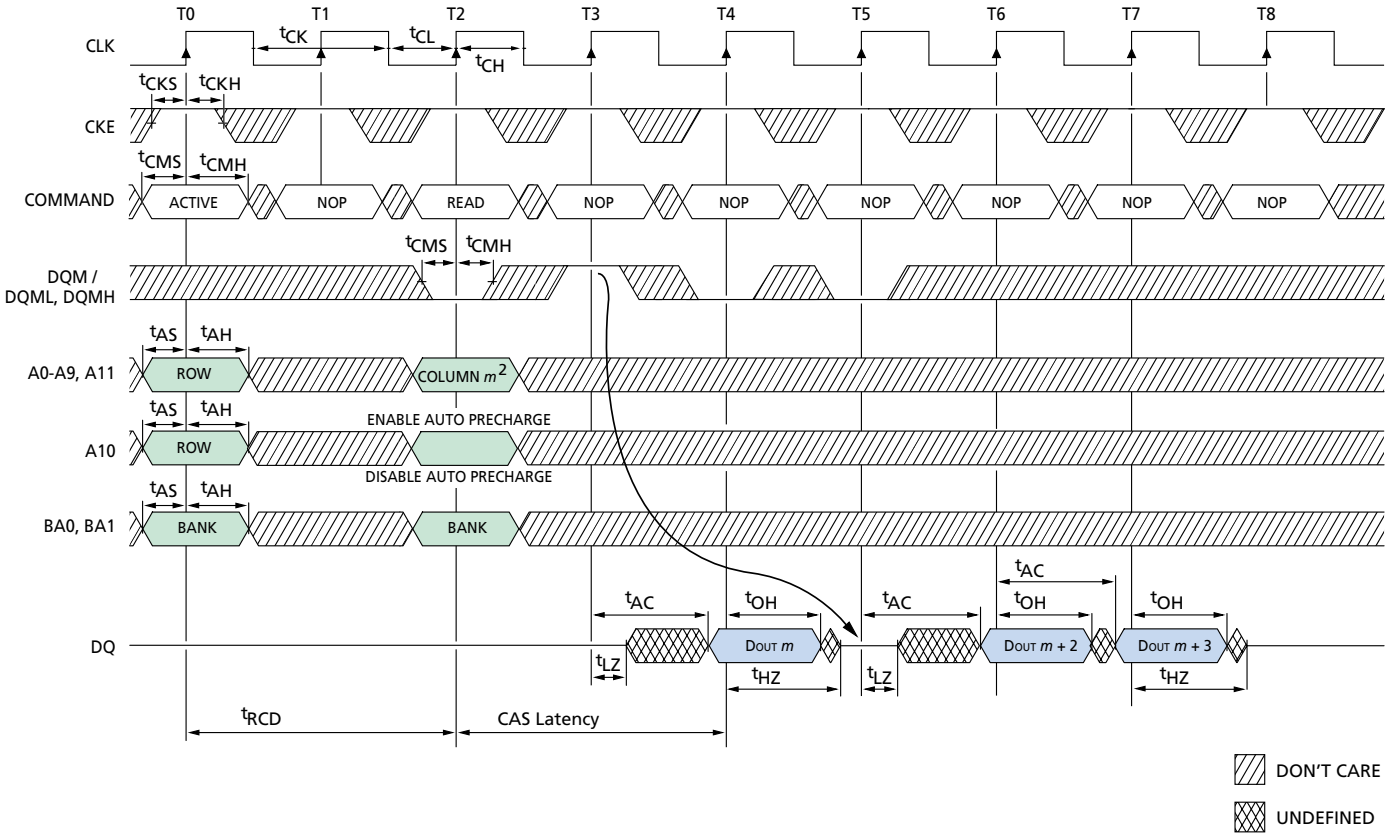

TIMING PARAMETERS

SYMBOL*	-7E MIN	-7E MAX	-75 MIN	-75 MAX	-8E MIN	-8E MAX	UNITS
tAC (3)		5.4		5.4		6	ns
tAC (2)		5.4		6		6	ns
tAH	0.8		0.8		1		ns
tAS	1.5		1.5		2		ns
tCH	2.5		2.5		3		ns
tCL	2.5		2.5		3		ns
tCK (3)	7		7.5		8		ns
tCK (2)	7.5		10		10		ns
tCKH	0.8		0.8		1		ns

SYMBOL*	-7E MIN	-7E MAX	-75 MIN	-75 MAX	-8E MIN	-8E MAX	UNITS
tCKS	1.5		1.5		2		ns
tCMH	0.8		0.8		1		ns
tCMS	1.5		1.5		2		ns
tHZ (3)		5.4		5.4		6	ns
tHZ (2)		5.4		6		7	ns
tLZ	1		1		1		ns
tOH	2.7		2.7		3		ns
tRCD	15		20		20		ns

*CAS latency indicated in parentheses.

NOTE: 1. For this example, the burst length = 4, and the CAS latency = 2.
2. x16: A8, A9 and A11 = "Don't Care"
x8: A9 and A11 = "Don't Care"
x4: A11 = "Don't Care"

Micron Technology, Inc., reserves the right to change products or specifications without notice.
©1999, Micron Technology, Inc.

WRITE – WITHOUT AUTO PRECHARGE [1]

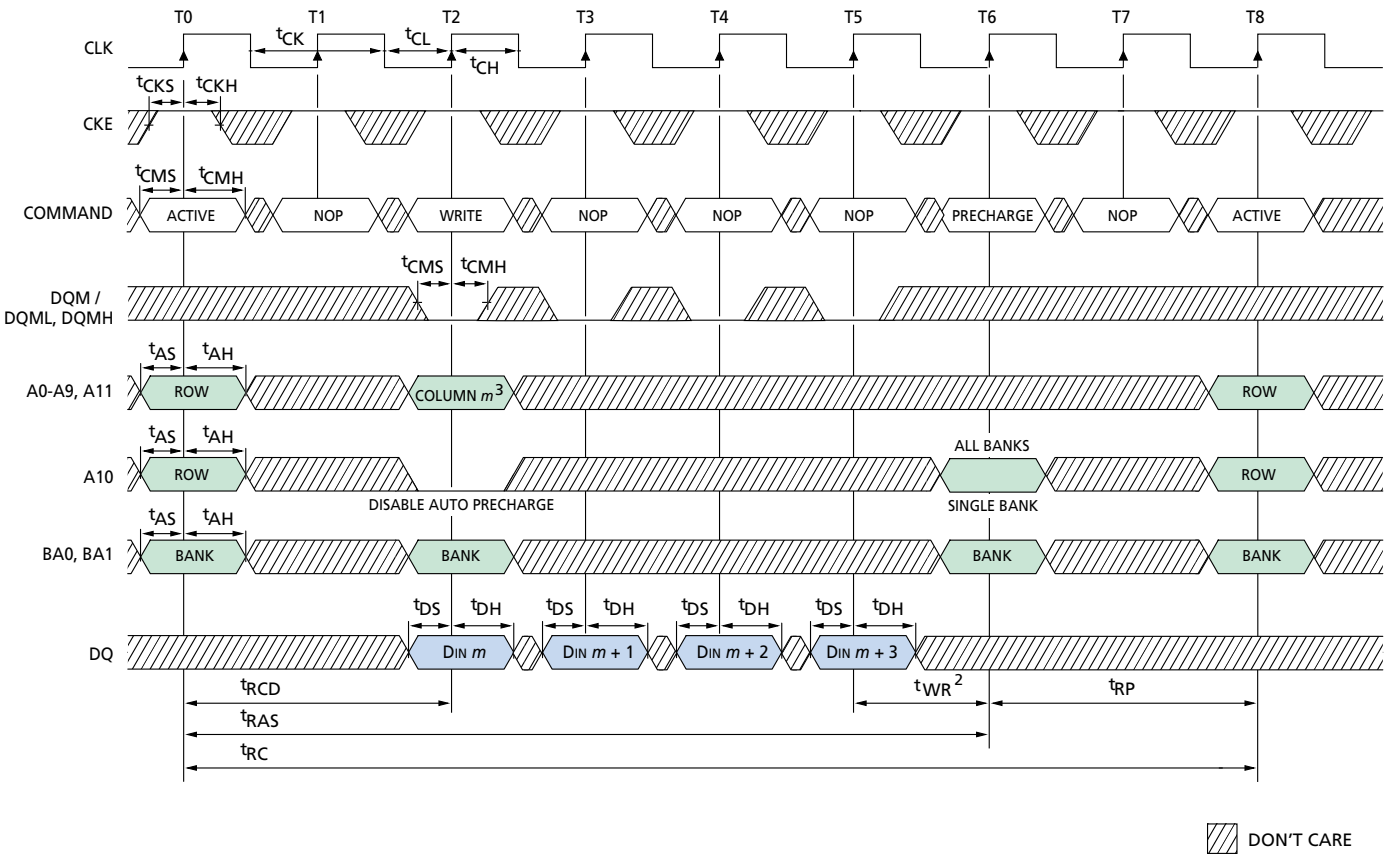

TIMING PARAMETERS

SYMBOL*	-7E MIN	-7E MAX	-75 MIN	-75 MAX	-8E MIN	-8E MAX	UNITS
tAH	0.8		0.8		1		ns
tAS	1.5		1.5		2		ns
tCH	2.5		2.5		3		ns
tCL	2.5		2.5		3		ns
tCK (3)	7		7.5		8		ns
tCK (2)	7.5		10		10		ns
tCKH	0.8		0.8		1		ns
tCKS	1.5		1.5		2		ns
tCMH	0.8		0.8		1		ns

SYMBOL*	-7E MIN	-7E MAX	-75 MIN	-75 MAX	-8E MIN	-8E MAX	UNITS
tCMS	1.5		1.5		2		ns
tDH	0.8		0.8		1		ns
tDS	1.5		1.5		2		ns
tRAS	37	120,000	44	120,000	50	120,000	ns
tRC	60		66		70		ns
tRCD	15		20		20		ns
tRP	15		20		20		ns
tWR	14		15		15		ns

*CAS latency indicated in parentheses.

NOTE: 1. For this example, the burst length = 4, and the WRITE burst is followed by a "manual" PRECHARGE.
2. 15ns is required between <DIN *m*> and the PRECHARGE command, regardless of frequency.
3. x16: A8, A9 and A11 = "Don't Care"
x8: A9 and A11 = "Don't Care"
x4: A11 = "Don't Care"

Micron Technology, Inc., reserves the right to change products or specifications without notice.
©1999, Micron Technology, Inc.

WRITE – WITH AUTO PRECHARGE [1]

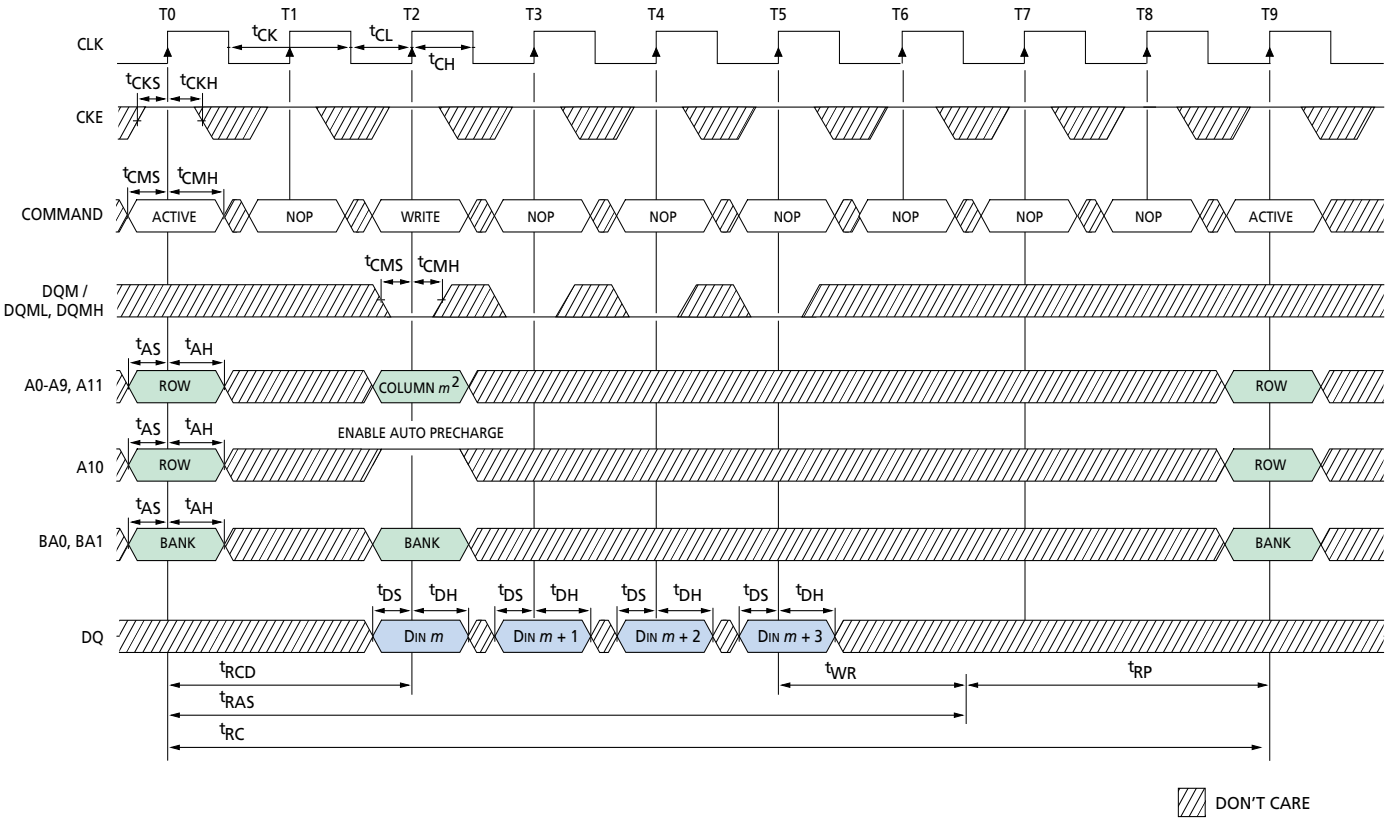

TIMING PARAMETERS

SYMBOL*	-7E MIN	-7E MAX	-75 MIN	-75 MAX	-8E MIN	-8E MAX	UNITS
tAH	0.8		0.8		1		ns
tAS	1.5		1.5		2		ns
tCH	2.5		2.5		3		ns
tCL	2.5		2.5		3		ns
tCK (3)	7		7.5		8		ns
tCK (2)	7.5		10		10		ns
tCKH	0.8		0.8		1		ns
tCKS	1.5		1.5		2		ns
tCMH	0.8		0.8		1		ns

SYMBOL*	7E MIN	7E MAX	-75 MIN	-75 MAX	-8E MIN	-8E MAX	UNITS
tCMS	1.5		1.5		2		ns
tDH	0.8		0.8		1		ns
tDS	1.5		1.5		2		ns
tRAS	37	120,000	44	120,000	50	120,000	ns
tRC	60		66		70		ns
tRCD	15		20		20		ns
tRP	15		20		20		ns
tWR	1 CLK + 7ns		1 CLK + 7.5ns		1 CLK + 7ns		–

*CAS latency indicated in parentheses.

NOTE: 1. For this example, the burst length = 4.
2. x16: A8, A9 and A11 = "Don't Care"
x8: A9 and A11 = "Don't Care"
x4: A11 = "Don't Care"

Micron Technology, Inc., reserves the right to change products or specifications without notice.
©1999, Micron Technology, Inc.

SINGLE WRITE – WITHOUT AUTO PRECHARGE [1]

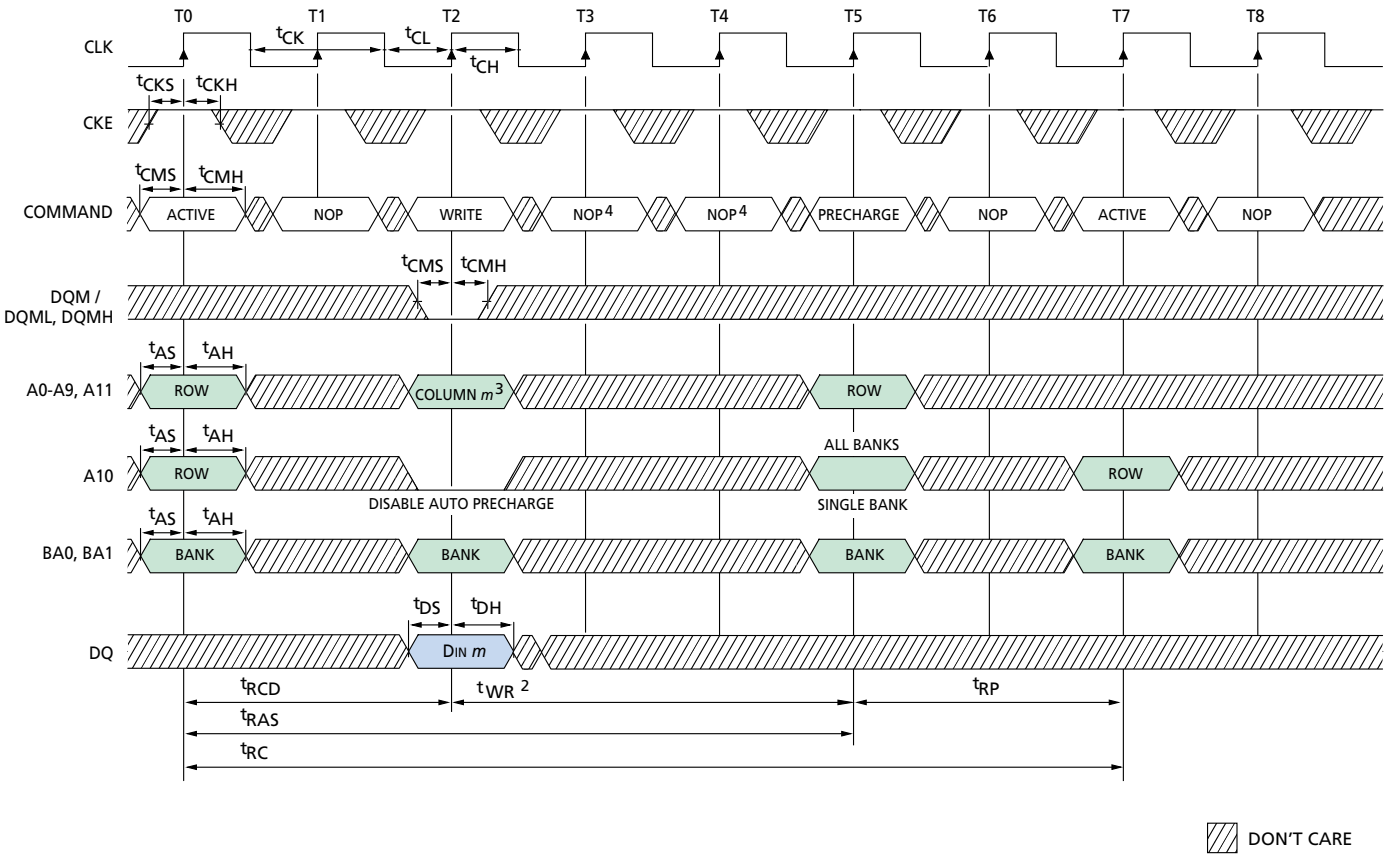

TIMING PARAMETERS

SYMBOL*	-7E MIN	-7E MAX	-75 MIN	-75 MAX	-8E MIN	-8E MAX	UNITS
tAH	0.8		0.8		1		ns
tAS	1.5		1.5		2		ns
tCH	2.5		2.5		3		ns
tCL	2.5		2.5		3		ns
tCK (3)	7		7.5		8		ns
tCK (2)	7.5		10		10		ns
tCKH	0.8		0.8		1		ns
tCKS	1.5		1.5		2		ns
tCMH	0.8		0.8		1		ns

SYMBOL*	-7E MIN	-7E MAX	-75 MIN	-75 MAX	-8E MIN	-8E MAX	UNITS
tCMS	1.5		1.5		2		ns
tDH	0.8		0.8		1		ns
tDS	1.5		1.5		2		ns
tRAS	37	120,000	44	120,000	50	120,000	ns
tRC	60		66		70		ns
tRCD	15		20		20		ns
tRP	15		20		20		ns
tWR	14		15		15		ns

*CAS latency indicated in parentheses.

NOTE: 1. For this example, the burst length = 1, and the WRITE burst is followed by a "manual" PRECHARGE.
2. 15ns is required between <DIN *m*> and the PRECHARGE command, regardless of frequency.
3. x16: A8, A9 and A11 = "Don't Care"
x8: A9 and A11 = "Don't Care"
x4: A11 = "Don't Care"
4. PRECHARGE command not allowed else tRAS would be violated.

Micron Technology, Inc., reserves the right to change products or specifications without notice.
©1999, Micron Technology, Inc.

SINGLE WRITE – WITH AUTO PRECHARGE [1]

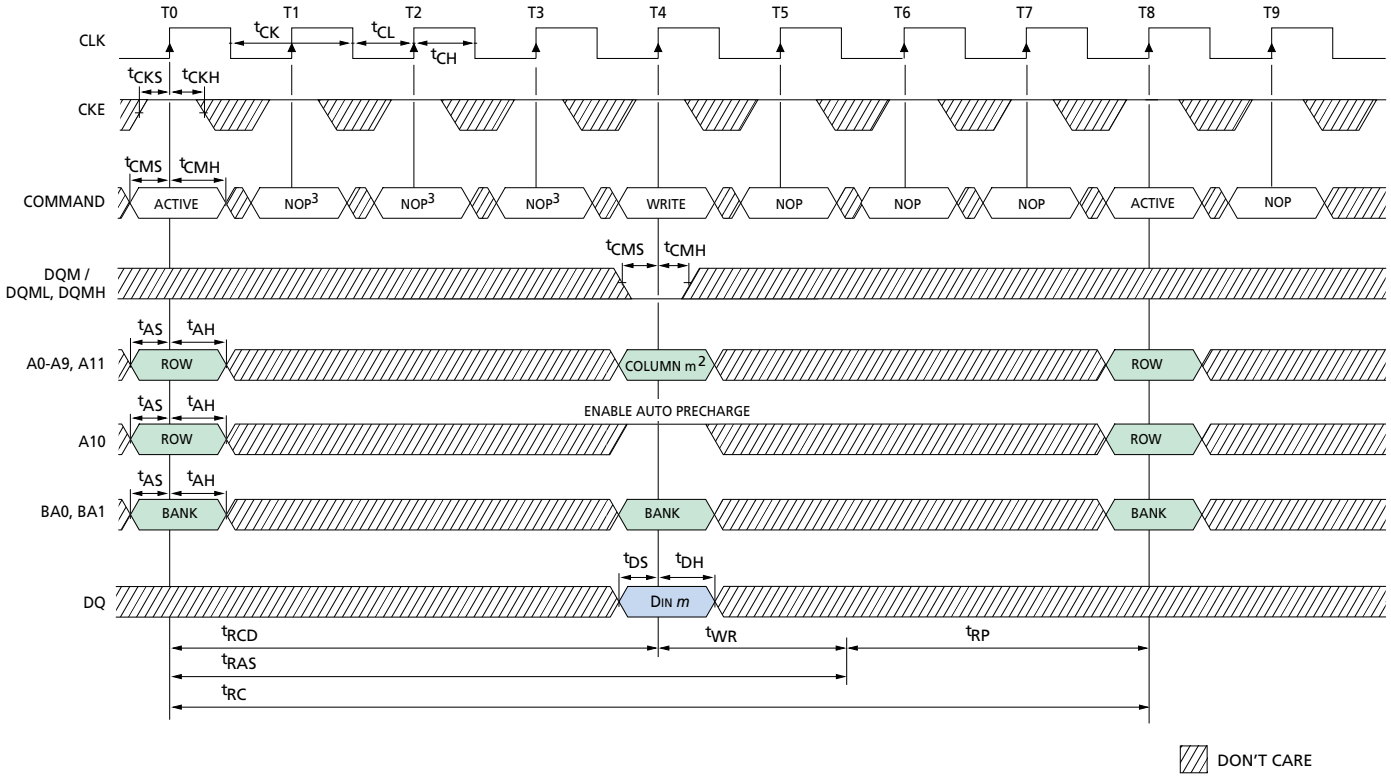

TIMING PARAMETERS

SYMBOL*	-7E MIN	-7E MAX	-75 MIN	-75 MAX	-8E MIN	-8E MAX	UNITS
tAH	0.8		0.8		1		ns
tAS	1.5		1.5		2		ns
tCH	2.5		2.5		3		ns
tCL	2.5		2.5		3		ns
tCK (3)	7		7.5		8		ns
tCK (2)	7.5		10		10		ns
tCKH	0.8		0.8		1		ns
tCKS	1.5		1.5		2		ns
tCMH	0.8		0.8		1		ns

SYMBOL*	7E MIN	7E MAX	-75 MIN	-75 MAX	-8E MIN	-8E MAX	UNITS
tCMS	1.5		1.5		2		ns
tDH	0.8		0.8		1		ns
tDS	1.5		1.5		2		ns
tRAS	37	120,000	44	120,000	50	120,000	ns
tRC	60		66		70		ns
tRCD	15		20		20		ns
tRP	15		20		20		ns
tWR	1 CLK + 7ns		1 CLK + 7.5ns		1 CLK + 7ns		–

*CAS latency indicated in parentheses.

NOTE: 1. For this example, the burst length = 1.
2. x16: A8, A9 and A11 = "Don't Care"
x8: A9 and A11 = "Don't Care"
x4: A11 = "Don't Care"
3. WRITE command not allowed else tRAS would be violated.

Micron Technology, Inc., reserves the right to change products or specifications without notice.
©1999, Micron Technology, Inc.

ALTERNATING BANK WRITE ACCESSES [1]

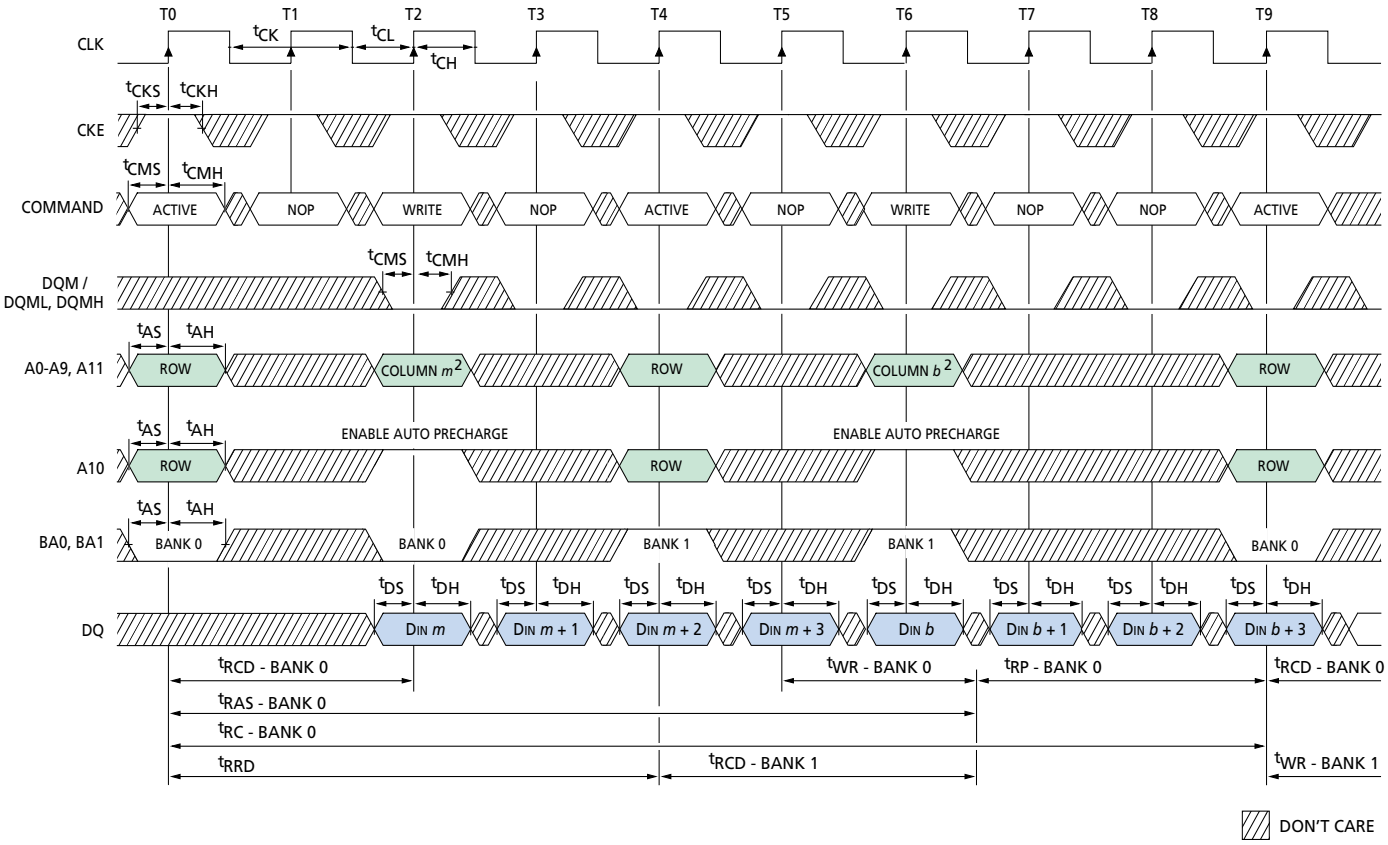

TIMING PARAMETERS

SYMBOL*	7E MIN	7E MAX	-75 MIN	-75 MAX	-8E MIN	-8E MAX	UNITS
tAH	0.8		0.8		1		ns
tAS	1.5		1.5		2		ns
tCH	2.5		2.5		3		ns
tCL	2.5		2.5		3		ns
tCK (3)	7		7.5		8		ns
tCK (2)	7.5		10		10		ns
tCKH	0.8		0.8		1		ns
tCKS	1.5		1.5		2		ns
tCMH	0.8		0.8		1		ns
tCMS	1.5		1.5		2		ns

SYMBOL*	-7E MIN	-7E MAX	-75 MIN	-75 MAX	-8E MIN	-8E MAX	UNITS
tDH	0.8		0.8		1		ns
tDS	1.5		1.5		2		ns
tRAS	37	120,000	44	120,000	50	120,000	ns
tRC	60		66		70		ns
tRCD	15		20		20		ns
tRP	15		20		20		ns
tRRD	14		15		20		ns
tWR	1 CLK + 7ns		1 CLK + 7.5ns		1 CLK + 7ns		–

*CAS latency indicated in parentheses.

NOTE: 1. For this example, the burst length = 4.
2. x16: A8, A9 and A11 = "Don't Care"
x8: A9 and A11 = "Don't Care"
x4: A11 = "Don't Care"

Micron Technology, Inc., reserves the right to change products or specifications without notice.
©1999, Micron Technology, Inc.

WRITE – FULL-PAGE BURST

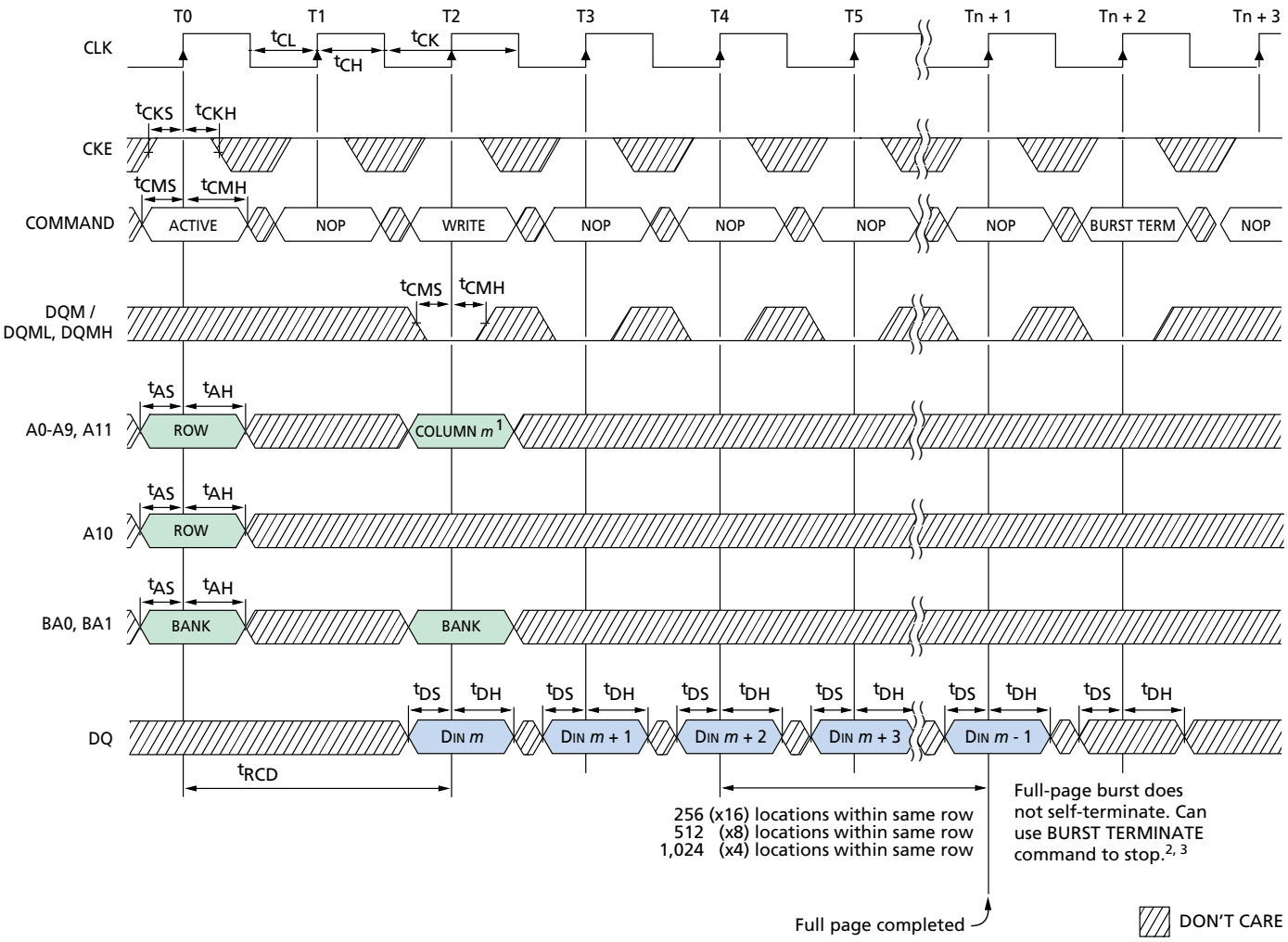

TIMING PARAMETERS

SYMBOL*	-7E MIN	-7E MAX	-75 MIN	-75 MAX	-8E MIN	-8E MAX	UNITS
tAH	0.8		0.8		1		ns
tAS	1.5		1.5		2		ns
tCH	2.5		2.5		3		ns
tCL	2.5		2.5		3		ns
tCK (3)	7		7.5		8		ns
tCK (2)	7.5		10		10		ns
tCKH	0.8		0.8		1		ns

SYMBOL*	-7E MIN	-7E MAX	-75 MIN	-75 MAX	-8E MIN	-8E MAX	UNITS
tCKS	1.5		1.5		2		ns
tCMH	0.8		0.8		1		ns
tCMS	1.5		1.5		2		ns
tDH	0.8		0.8		1		ns
tDS	1.5		1.5		2		ns
tRCD	15		20		20		ns

*CAS latency indicated in parentheses.

NOTE: 1. x16: A8, A9 and A11 = "Don't Care"
x8: A9 and A11 = "Don't Care"
x4: A11 = "Don't Care"
2. tWR must be satisfied prior to PRECHARGE command.
3. Page left open; no tRP.

Micron Technology, Inc., reserves the right to change products or specifications without notice.
©1999, Micron Technology, Inc.

WRITE – DQM OPERATION [1]

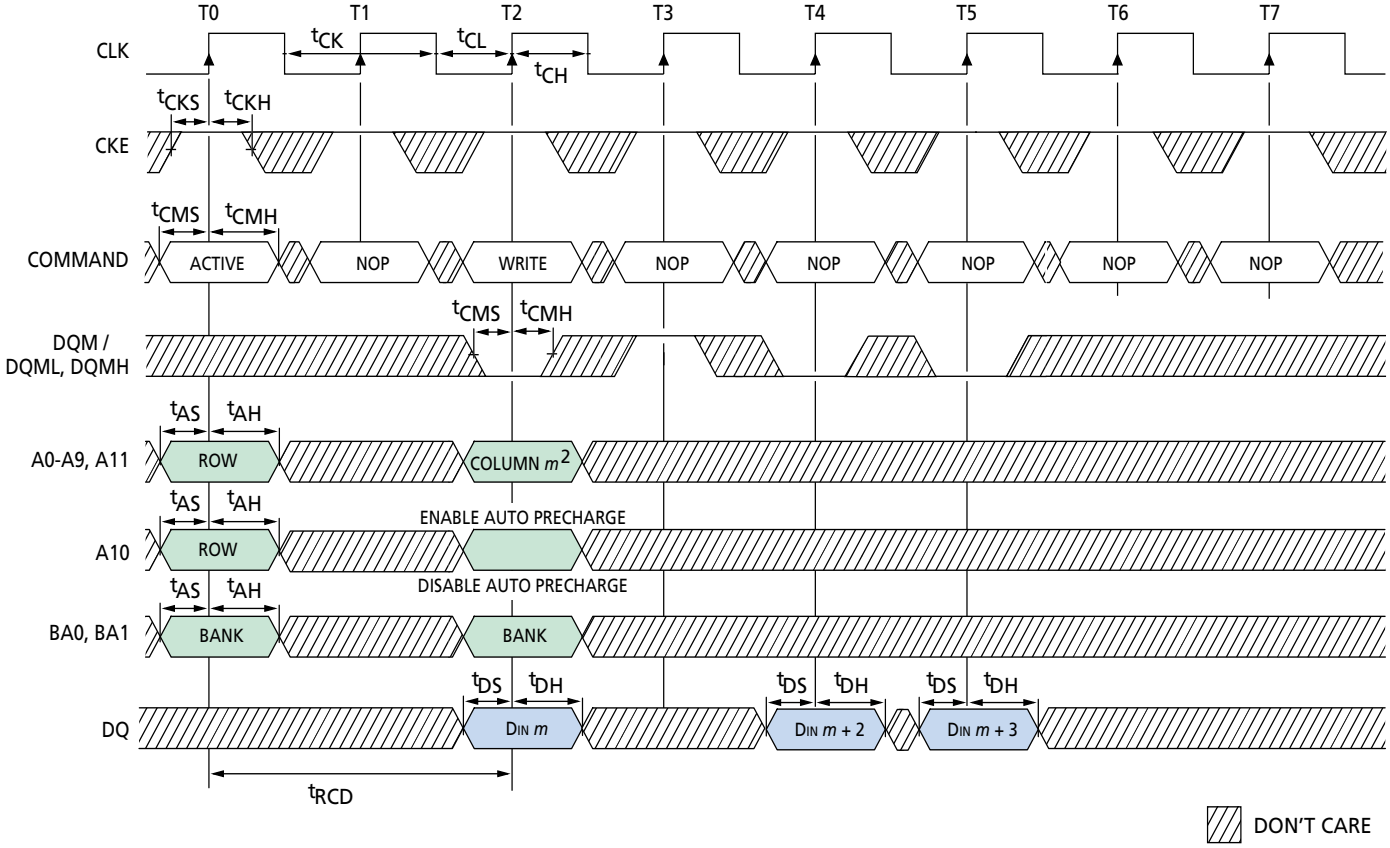

TIMING PARAMETERS

SYMBOL*	-7E MIN	-7E MAX	-75 MIN	-75 MAX	-8E MIN	-8E MAX	UNITS
tAH	0.8		0.8		1		ns
tAS	1.5		1.5		2		ns
tCH	2.5		2.5		3		ns
tCL	2.5		2.5		3		ns
tCK (3)	7		7.5		8		ns
tCK (2)	7.5		10		10		ns
tCKH	0.8		0.8		1		ns

SYMBOL*	-7E MIN	-7E MAX	-75 MIN	-75 MAX	-8E MIN	-8E MAX	UNITS
tCKS	1.5		1.5		2		ns
tCMH	0.8		0.8		1		ns
tCMS	1.5		1.5		2		ns
tDH	0.8		0.8		1		ns
tDS	1.5		1.5		2		ns
tRCD	15		20		20		ns

*CAS latency indicated in parentheses.

NOTE: 1. For this example, the burst length = 4.
2. x16: A8, A9 and A11 = "Don't Care"
x8: A9 and A11 = "Don't Care"
x4: A11 = "Don't Care"

Micron Technology, Inc., reserves the right to change products or specifications without notice.
©1999, Micron Technology, Inc.

54-PIN PLASTIC TSOP (400 mil)

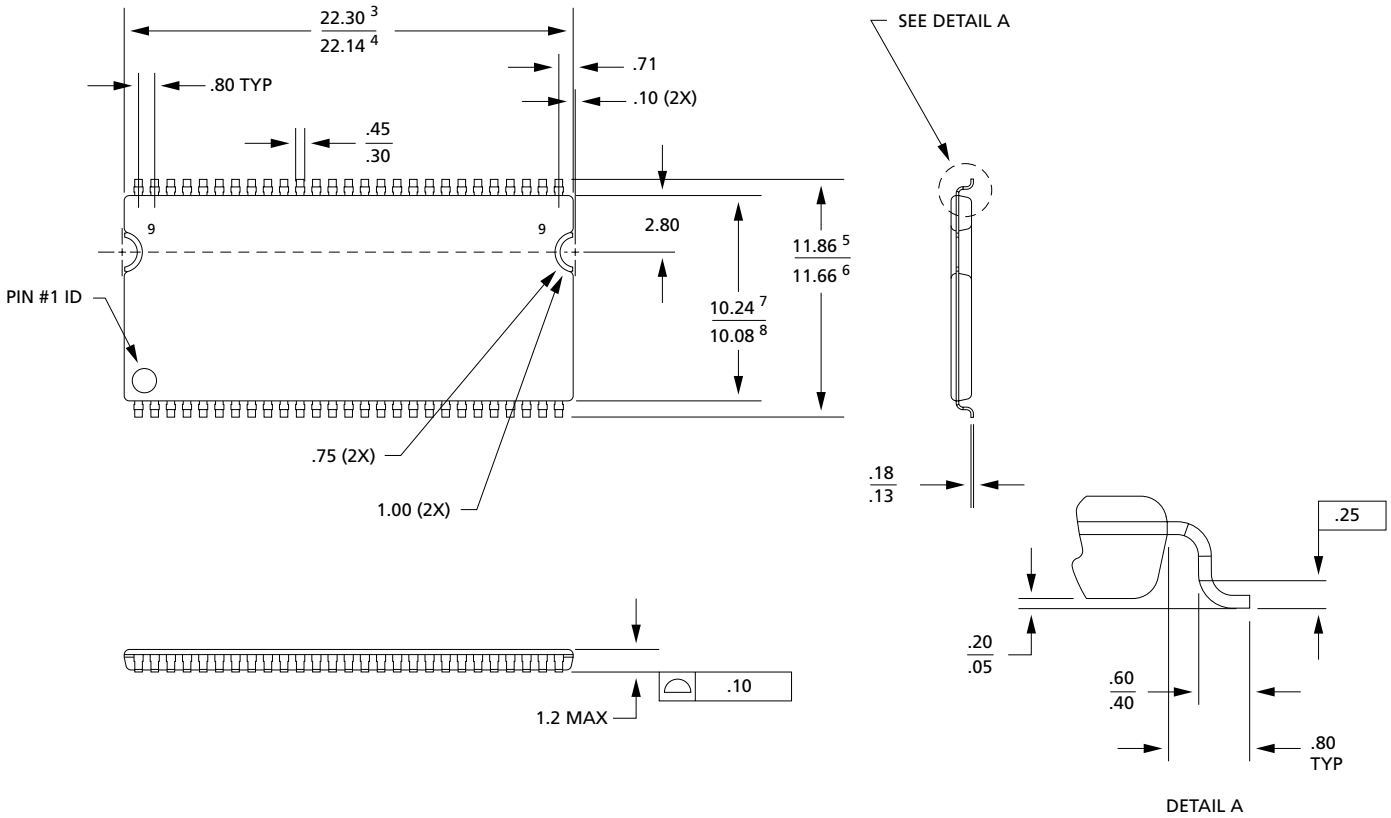

NOTE: 1. All dimensions in millimeters $\frac{\text{MAX}}{\text{MIN}}$ or typical where noted.

2. Package width and length do not include mold protrusion; allowable mold protrusion is 0.25mm per side.
3. 22.35 for some versions.
4. 22.09 for some versions.
5. 11.96 for some versions.
6. 11.56 for some versions.
7. 10.29 for some versions.
8. 10.03 for some versions.

8000 S. Federal Way, P.O. Box 6, Boise, ID 83707-0006, Tel: 208-368-3900
E-mail: prodmktg@micron.com, Internet: http://www.micron.com, Customer Comment Line: 800-932-4992
Micron is a registered trademark of Micron Technology, Inc.

Micron Technology, Inc., reserves the right to change products or specifications without notice.
©1999, Micron Technology, Inc.