TOSHIBA Digital Integrated Circuit Silicon Monolithic

TC7WP3125FK, TC7WP3125FC

Low Voltage/Low Power 2-Bit Dual Supply Bus Buffer

The TC7WP3125 is a dual supply, advanced high-speed CMOS 2-bit dual supply voltage interface bus buffer fabricated with silicon gate CMOS technology.

It is also designed with over voltage tolerant inputs and outputs up to 3.6 V.

Designed for use as an interface between a 1.2-V, 1.5-V, 1.8-V, or 2.5-V bus and a 1.8-V, 2.5-V or 3.6-V bus in mixed 1.2-V, 1.5-V, 1.8-V or 2.5-V/1.8-V, 2.5-V or 3.6-V supply systems.

The A-input interfaces with the 1.2-V, 1.5-V, 1.8-V or 2.5-V bus, the B-output with the 1.8-V, 2.5-V, 3.3-V bus.

The enable input ($\overline{OE}$) can be used to disable the device so that the signal lines are effectively isolated.

All inputs are equipped with protection circuits against static discharge or transient excess voltage.

TC7WP3125FK

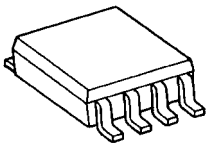

SSOP8-P-0.50A

TC7WP3125FC

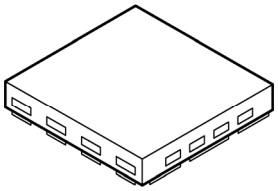

CSON8-P-0.4

Weight:
SSOP8-P-0.50A : 0.01 g (typ.)
CSON8-P-0.4 : 0.002 g (typ.)

Features

- Level converter for interfacing 1.2-V to 1.8-V, 1.2-V to 2.5-V, 1.2-V to 3.3-V, 1.5-V to 2.5-V, 1.5-V to 3.3-V, 1.8-V to 2.5-V, 1.8-V to 3.3-V or 2.5 V to 3.3-V system.
- High-speed operation : t_{pd} = 6.8 ns (max) (V_{CCA} = 2.5 ± 0.2 V, V_{CCB} = 3.3 ± 0.3 V)
  t_{pd} = 7.8 ns (max) (V_{CCA} = 1.8 ± 0.15 V, V_{CCB} = 3.3 ± 0.3 V)
  t_{pd} = 8.6 ns (max) (V_{CCA} = 1.5 ± 0.1 V, V_{CCB} = 3.3 ± 0.3 V)
  t_{pd} = 22 ns (max) (V_{CCA} = 1.2 ± 0.1 V, V_{CCB} = 3.3 ± 0.3 V)
  t_{pd} = 9.5 ns (max) (V_{CCA} = 1.8 ± 0.15 V, V_{CCB} = 2.5 ± 0.2 V)
  t_{pd} = 10.8 ns (max) (V_{CCA} = 1.5 ± 0.15 V, V_{CCB} = 2.5 ± 0.2 V)
  t_{pd} = 23 ns (max) (V_{CCA} = 1.2 ± 0.15 V, V_{CCB} = 2.5 ± 0.2 V)
  t_{pd} = 30 ns (max) (V_{CCA} = 1.2 ± 0.1 V, V_{CCB} = 1.8 ± 0.15 V)
- Output current : I_{OH}/I_{OL} = ±12 mA (min) (V_{CC} = 3.0 V)
  I_{OH}/I_{OL} = ±9mA (min) (V_{CC} = 2.3 V)
  I_{OH}/I_{OL} = ±3 mA (min) (V_{CC} = 1.65 V)
- Latch-up performance: −300 mA
- ESD performance: Machine model ≥ ±200 V
  Human body model ≥ ±2000 V
- Ultra-small package: CSON8(CST8), SSOP8(US8)
- Low current consumption : Using the new circuit significantly reduces current consumption when $\overline{OE}$ = "H".
  Suitable for battery-driven applications such as PDAs and cellular phones.
- 3.6-V tolerant function and power-down protection provided on all inputs and outputs.

Note: Do not apply a signal to any bus pins when it is in the output mode. Damage may result.

Pin Assignment (top view)

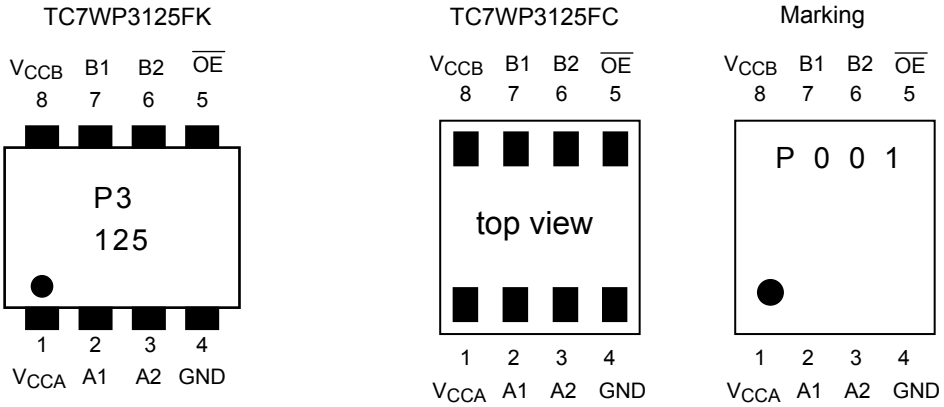

Truth Table

Inputs		Output
$\overline{OE}$	A1, A2	B1, B2
L	L	L
L	H	H
H	X	Z

X: Don't care

Z: High impedance

IEC Logic Symbol

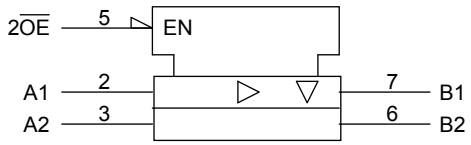

Block Diagram

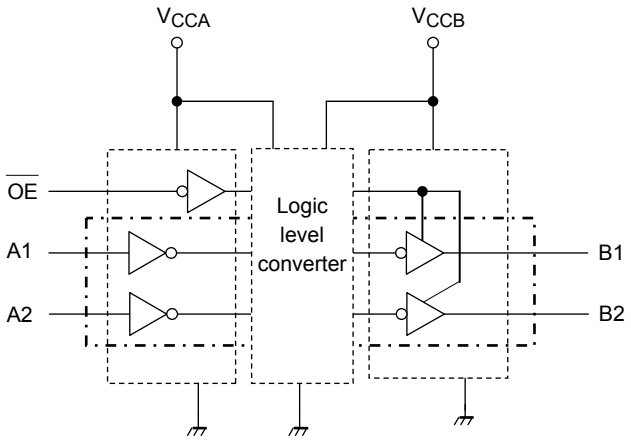

Absolute Maximum Ratings (Note 1)

Characteristics	Symbol	Rating	Unit
Power supply voltage (Note 2)	V_{CCA}	−0.5 to 4.6	V
	V_{CCB}	−0.5 to 4.6	
DC input voltage (An, $\overline{OE}$)	V_{IN}	−0.5 to 4.6	V
DC output voltage (Bn)	V_{OUTB}	−0.5 to 4.6 (Note 3)	V
		−0.5 to V_{CCB} + 0.5 (Note 4)	
Input diode current	I_{IK}	−50	mA
Output diode current	I_{OK}	±50 (Note 5)	mA
DC output current	I_{OUTB}	±25	mA
DC V_{CC}/ground current per supply pin	I_{CCA}	±25	mA
	I_{CCB}	±50	
Power dissipation	P_D	180	mW
Storage temperature	T_{stg}	−65 to 150	°C

Note 1: Exceeding any of the absolute maximum ratings, even briefly, lead to deterioration in IC performance or even destruction.
Using continuously under heavy loads (e.g. the application of high temperature/current/voltage and the significant change in temperature, etc.) may cause this product to decrease in the reliability significantly even if the operating conditions (i.e. operating temperature/current/voltage, etc.) are within the absolute maximum ratings and the operating ranges.
Please design the appropriate reliability upon reviewing the Toshiba Semiconductor Reliability Handbook ("Handling Precautions"/"Derating Concept and Methods") and individual reliability data (i.e. reliability test report and estimated failure rate, etc).

Note 2: Don't supply a voltage to V_{CCB} pin when V_{CCA} is in the OFF state.

Note 3: Output in OFF state

Note 4: High or Low stats. I_{OUT} absolute maximum rating must be observed.

Note 5: $V_{OUT} < GND$, $V_{OUT} > V_{CC}$

Operating Ranges (Note 1)

Characteristics	Symbol	Rating	Unit
Power supply voltage (Note 2)	V_{CCA}	1.1 to 2.7	V
	V_{CCB}	1.65 to 3.6	
Input voltage (An, $\overline{OE}$)	V_{IN}	0 to 3.6	V
Output voltage (Bn)	V_{OUTB}	0 to 3.6 (Note 3)	V
		0 to V_{CCB} (Note 4)	
Output current (Bn)	I_{OUTB}	±12 (Note 5)	mA
		±9 (Note 6)	
		±3 (Note 7)	
Operating temperature	T_{opr}	−40 to 85	°C
Input rise and fall time	dt/dv	0 to 10 (Note 8)	ns/V

Note 1: The operating ranges must be maintained to ensure the normal operation of the device.
Unused inputs must be tied to either V_{CC} or GND.

Note 2: Don't use in $V_{CCA} > V_{CCB}$

Note 3: Output in OFF state

Note 4: High or low state

Note 5: V_{CCB} = 3.0 to 3.6 V

Note 6: V_{CCB} = 2.3 to 2.7 V

Note 7: V_{CCB} = 1.65 to 1.95 V

Note 8: V_{IN} = 0.8 to 2.0 V, V_{CCA} = 2.5 V, V_{CCB} = 3.0 V

Electrical Characteristics

DC Characteristics (1.1 V ≦ V_{CCA} ≦ 2.7 V , 1.65 V ≦ V_{CCB} ≦ 3.6 V)

Characteristics	Symbol	Test Condition		V_{CCA} (V)	V_{CCB} (V)	Ta = −40~85°C		Unit
						Min	Max	
H-level input voltage	V_{IHA}	V_{IN}		1.1≦V_{CCA} <1.4	1.65 to 3.6	0.65 × VccA	—	V
				1.4≦V_{CCA} <1.65	2.3 to 3.6	0.65 × VccA	—	V
				1.65≦V_{CCA} <2.3	2.3 to 3.6	0.65 × VccA	—	V
				2.3≦V_{CCA} ≦2.7	2.7 to 3.6	1.6	—	V
L-level input voltage	V_{ILA}	V_{IN}		1.1≦V_{CCA} <1.4	1.65 to 3.6	—	0.30 × V_{CC}A	V
				1.4≦V_{CCA} <1.65	2.3 to 3.6	—	0.30 × V_{CC}A	V
				1.65≦V_{CCA} <2.3	2.3 to 3.6	—	0.35 × V_{CC}A	V
				2.3≦V_{CCA} ≦2.7	2.7 to 3.6	—	0.7	V
H-level output voltage	V_{OHB}	A_n = V_{IH}	I_{OHB} = −100 μA	1.1 to 2.7	1.65 to 3.6	V_{CCB} − 0.2	—	V
			I_{OHB} = − 3 mA	1.1 to 1.4	1.65 to 2.3	1.25	—	
			I_{OHB} = − 9 mA	1.1 to 2.3	2.3 to 2.7	1.7	—	
			I_{OHB} = −12 mA	1.1 to 2.7	2.7 to 3.6	2.2	—	
L-level output voltage	V_{OLB}	A_n = V_{IL}	I_{OLB} = 100 μA	1.1 to 2.7	1.65 to 3.6	—	0.2	V
			I_{OLB} = 3 mA	1.1 to 1.4	1.65 to 2.3	—	0.3	
			I_{OLB} = 9 mA	1.1 to 2.3	2.3 to 2.7	—	0.6	
			I_{OLB} = 12 mA	1.1 to 2.7	2.7 to 3.6	—	0.55	
3-state output OFF state current	I_{OZB}	A_n = V_{IHA} or V_{ILA} B_n = 0 to 3.6 V		1.1 to 2.7	1.65 to 3.6	—	±2.0	μA
Input leakage current	I_{IN}	V_{IN} = 0 to 3.6 V		1.1~2.7	1.65 to 3.6	—	±1.0	μA
Power-off leakage current	I_{OFF1}	V_{IN},B_n = 0 to 3.6 V		0	0	—	2.0	μA
	I_{OFF2}	$\overline{OE}$ = V_{CCA}		1.1 to 2.7	0	—	2.0	
	I_{OFF3}	A_n, B_n = 0 to 3.6 V		1.1 to 2.7	OPEN	—	2.0	
Quiescent supply current	I_{CCA}	V_{IN} = V_{CCA} or GND		1.1 to 2.7	1.65 to 3.6	—	2.0	μA
	I_{CCB}	V_{IN} = V_{CCA} or GND		1.1 to 2.7	1.65 to 3.6	—	2.0	
	I_{CCA}	V_{CCA} < V_{IN} ≦ 3.6 V		1.1 to 2.7	1.65 to 3.6	—	±2.0	
	I_{CCB}	V_{IN}=V_{CCA} V_{CCB} ≦ B_n ≦ 3.6 V		1.1 to 2.7	1.65 to 3.6	—	±2.0	

AC Characteristics (Ta = –40 to 85°C, Input: $t_r = t_f = 2.0$ ns)

$V_{CCA} = 2.5 \pm 0.2$ V, $V_{CCB} = 3.3 \pm 0.3$ V

Characteristics	Symbol	Test Condition	Min	Max	Unit
Propagation delay time (An → Bn)	t_{pLH} t_{pHL}	Figure 1, Figure 2	1.0	6.8	ns
3-state output enable time ($\overline{OE}$ → Bn)	t_{pZL} t_{pZH}	Figure 1, Figure 3	1.0	8.7	
3-state output disable time ($\overline{OE}$ → Bn)	t_{pLZ} t_{pHZ}	Figure 1, Figure 3	1.0	3.9	
Output to output skew	t_{osLH} t_{osHL}	(Note)	—	0.5	ns

Note: Parameter guaranteed by design.
($t_{osLH} = |t_{pLHm} - t_{pLHn}|$, $t_{osHL} = |t_{pHLm} - t_{pHLn}|$)

$V_{CCA} = 1.8 \pm 0.15$ V, $V_{CCB} = 3.3 \pm 0.3$ V

Characteristics	Symbol	Test Condition	Min	Max	Unit
Propagation delay time (An → Bn)	t_{pLH} t_{pHL}	Figure 1, Figure 2	1.0	7.8	ns
3-state output enable time ($\overline{OE}$ → Bn)	t_{pZL} t_{pZH}	Figure 1, Figure 3	1.0	10.7	
3-state output disable time ($\overline{OE}$ → Bn)	t_{pLZ} t_{pHZ}	Figure 1, Figure 3	1.0	5.2	
Output to output skew	t_{osLH} t_{osHL}	(Note)	—	0.5	ns

Note: Parameter guaranteed by design.
($t_{osLH} = |t_{pLHm} - t_{pLHn}|$, $t_{osHL} = |t_{pHLm} - t_{pHLn}|$)

$V_{CCA} = 1.5 \pm 0.1$ V, $V_{CCB} = 3.3 \pm 0.3$ V

Characteristics	Symbol	Test Condition	Min	Max	Unit
Propagation delay time (An → Bn)	t_{pLH} t_{pHL}	Figure 1, Figure 2	1.0	8.6	ns
3-state output enable time ($\overline{OE}$ → Bn)	t_{pZL} t_{pZH}	Figure 1, Figure 3	1.0	14.3	
3-state output disable time ($\overline{OE}$ → Bn)	t_{pLZ} t_{pHZ}	Figure 1, Figure 3	1.0	6.6	
Output to output skew	t_{osLH} t_{osHL}	(Note)	—	1.5	ns

Note: Parameter guaranteed by design.
($t_{osLH} = |t_{pLHm} - t_{pLHn}|$, $t_{osHL} = |t_{pHLm} - t_{pHLn}|$)

V_{CCA} = 1.2 ± 0.1 V, V_{CCB} = 3.3 ± 0.3 V

Characteristics	Symbol	Test Condition	Min	Max	Unit
Propagation delay time (An → Bn)	t_{pLH} t_{pHL}	Figure 1, Figure 2	1.0	22	ns
3-state output enable time ($\overline{OE}$ → Bn)	t_{pZL} t_{pZH}	Figure 1, Figure 3	1.0	52	
3-state output disable time ($\overline{OE}$ → Bn)	t_{pLZ} t_{pHZ}	Figure 1, Figure 3	1.0	18	
Output to output skew	t_{osLH} t_{osHL}	(Note)	—	1.5	ns

Note: Parameter guaranteed by design.
($t_{osLH} = |t_{pLHm} - t_{pLHn}|$, $t_{osHL} = |t_{pHLm} - t_{pHLn}|$)

V_{CCA} = 1.8 ± 0.15 V, V_{CCB} = 2.5 ± 0.2 V

Characteristics	Symbol	Test Condition	Min	Max	Unit
Propagation delay time (An → Bn)	t_{pLH} t_{pHL}	Figure 1, Figure 2	1.0	9.5	ns
3-state output enable time ($\overline{OE}$ → Bn)	t_{pZL} t_{pZH}	Figure 1, Figure 3	1.0	12.6	
3-state output disable time ($\overline{OE}$ → Bn)	t_{pLZ} t_{pHZ}	Figure 1, Figure 3	1.0	5.1	
Output to output skew	t_{osLH} t_{osHL}	(Note)	—	0.5	ns

Note: Parameter guaranteed by design.
($t_{osLH} = |t_{pLHm} - t_{pLHn}|$, $t_{osHL} = |t_{pHLm} - t_{pHLn}|$)

V_{CCA} = 1.5 ± 0.1 V, V_{CCB} = 2.5 ± 0.2 V

Characteristics	Symbol	Test Condition	Min	Max	Unit
Propagation delay time (An → Bn)	t_{pLH} t_{pHL}	Figure 1, Figure 2	1.0	10.5	ns
3-state output enable time ($\overline{OE}$ → Bn)	t_{pZL} t_{pZH}	Figure 1, Figure 3	1.0	15.4	
3-state output disable time ($\overline{OE}$ → Bn)	t_{pLZ} t_{pHZ}	Figure 1, Figure 3	1.0	6.4	
Output to output skew	t_{osLH} t_{osHL}	(Note)	—	1.5	ns

Note: Parameter guaranteed by design.
($t_{osLH} = |t_{pLHm} - t_{pLHn}|$, $t_{osHL} = |t_{pHLm} - t_{pHLn}|$)

V_{CCA} = 1.2 ± 0.1 V, V_{CCB} = 2.5 ± 0.2 V

Characteristics	Symbol	Test Condition	Min	Max	Unit
Propagation delay time (An → Bn)	t_{pLH} t_{pHL}	Figure 1, Figure 2	1.0	23	ns
3-state output enable time ($\overline{OE}$ → Bn)	t_{pZL} t_{pZH}	Figure 1, Figure 3	1.0	54	
3-state output disable time ($\overline{OE}$ → Bn)	t_{pLZ} t_{pHZ}	Figure 1, Figure 3	1.0	17	
Output to output skew	t_{osLH} t_{osHL}	(Note)	—	1.5	ns

Note: Parameter guaranteed by design.
($t_{osLH} = |t_{pLHm} - t_{pLHn}|$, $t_{osHL} = |t_{pHLm} - t_{pHLn}|$)

V_{CCA} = 1.2 ± 0.1 V, V_{CCB} = 1.8 ± 0.15 V

Characteristics	Symbol	Test Condition	Min	Max	Unit
Propagation delay time (An → Bn)	t_{pLH} t_{pHL}	Figure 1, Figure 2	1.0	30	ns
3-state output enable time ($\overline{OE}$ → Bn)	t_{pZL} t_{pZH}	Figure 1, Figure 3	1.0	55	
3-state output disable time ($\overline{OE}$ → Bn)	t_{pLZ} t_{pHZ}	Figure 1, Figure 3	1.0	17	
Output to output skew	t_{osLH} t_{osHL}	(Note)	—	1.5	ns

Note: Parameter guaranteed by design.
($t_{osLH} = |t_{pLHm} - t_{pLHn}|$, $t_{osHL} = |t_{pHLm} - t_{pHLn}|$)

Capacitive Characteristics (Ta = 25°C)

Characteristics	Symbol	Test Circuit	V_{CCA} (V)	V_{CCB} (V)	Typ.	Unit
Input capacitance	C_{IN}	An, $\overline{OE}$	2.5	3.3	7	pF
Output capacitance	C_{OUT}	Bn	2.5	3.3	8	pF
Power dissipation capacitance (Note)	C_{PDA}	/OE="L"	2.5	3.3	3	pF
		/OE="H"	2.5	3.3	0	
	C_{PDB}	/OE="L"	2.5	3.3	13	
		/OE="H"	2.5	3.3	0	

Note: C_{PD} is defined as the value of the internal equivalent capacitance which is calculated from the operating current consumption without load.
Average operating current can be obtained by the equation:
$I_{CC\ (opr)} = C_{PD} \cdot V_{CC} \cdot f_{IN} + I_{CC}/2$ (per bit)

AC Test Circuit

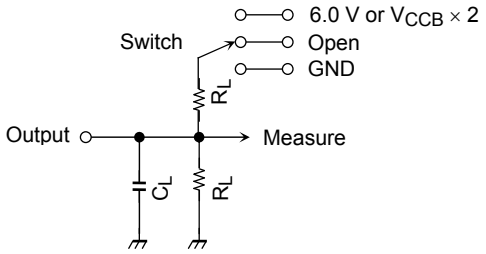

Parameter	Switch	
t_{pLH}, t_{pHL}	Open	
t_{pLZ}, t_{pZL}	6.0 V	@ V_{CCB}=3.3±0.3V
	$V_{CCB} \times 2$	@ V_{CCB}=2.5±0.2V
		@ V_{CCB}=1.8±0.15V
t_{pHZ}, t_{pZH}	GND	

Symbol	V_{CCB} (output)	
	3.3 ± 0.3 V 2.5 ± 0.2 V	1.8 ± 0.15 V
R_L	500 Ω	1 kΩ
C_L	30 pF	30 pF

Figure 1

AC Waveform

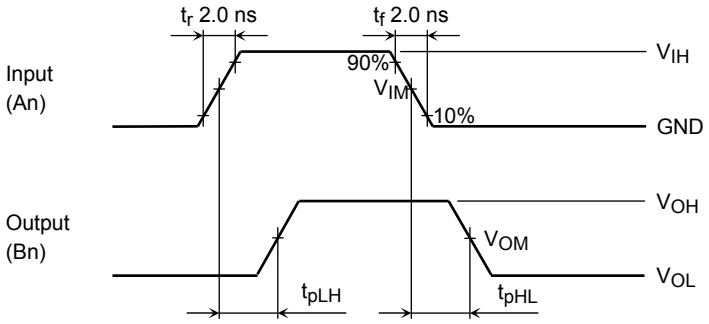

Figure 2 t_{pLH}, t_{pHL}

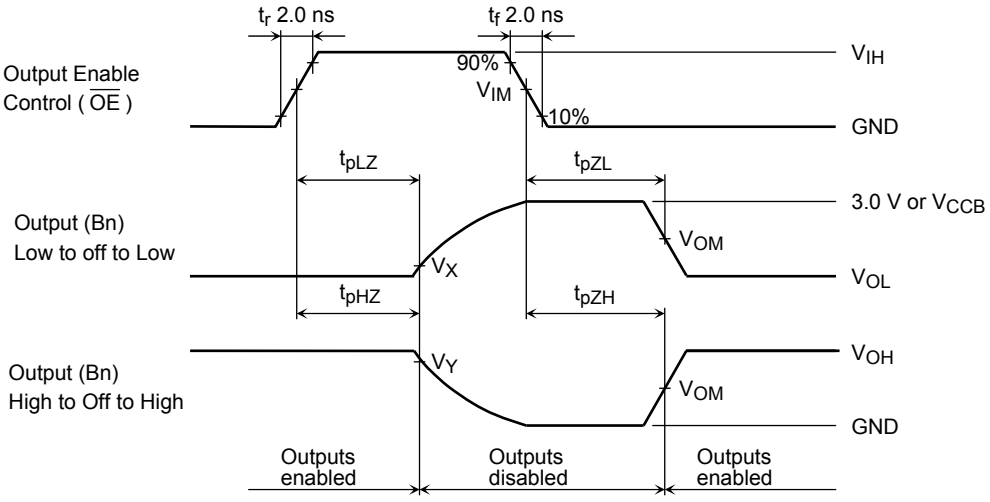

Figure 3 t_{pLZ}, t_{pHZ}, t_{pZL}, t_{pZH}

	Symbol	V_{CCA} , V_{CCB}		
		3.3 ± 0.3 V	2.5 ± 0.2 V 1.8 ± 0.15 V	1.5 ± 0.1 V 1.2 ± 0.1 V
Input	V_{IH}	-	V_{CCA}	V_{CCA}
	V_{IM}	-	$V_{CCA}/2$	$V_{CCA}/2$
Output	V_{OM}	$V_{OH}/2$	$V_{OH}/2$	-
	V_X	V_{OL} + 0.3 V	V_{OL} + 0.15 V	-
	V_Y	V_{OH} − 0.3 V	V_{OH} − 0.15 V	-

Package Dimensions

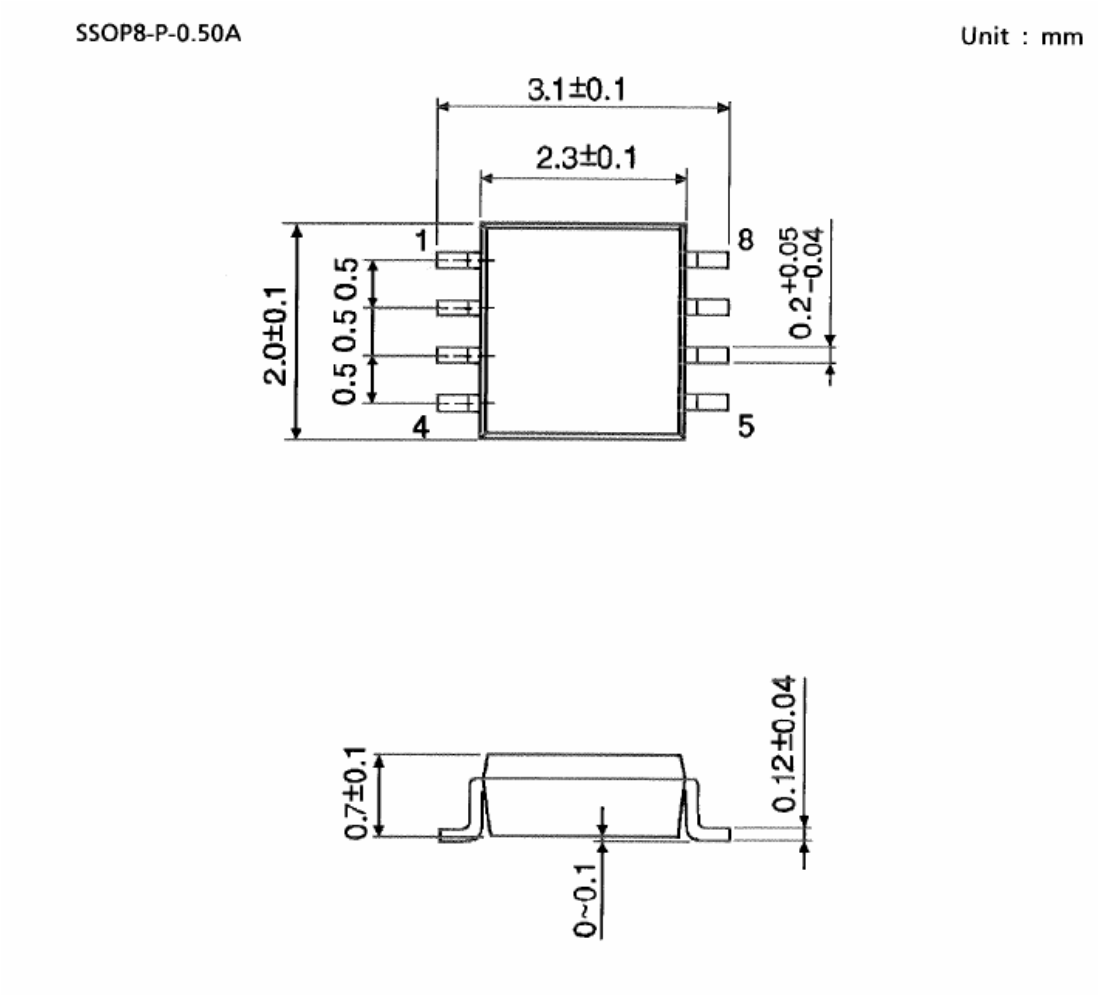

weight: 0.01 g (typ.)

Package Dimensions

CSON8-P-0.4 Unit: mm

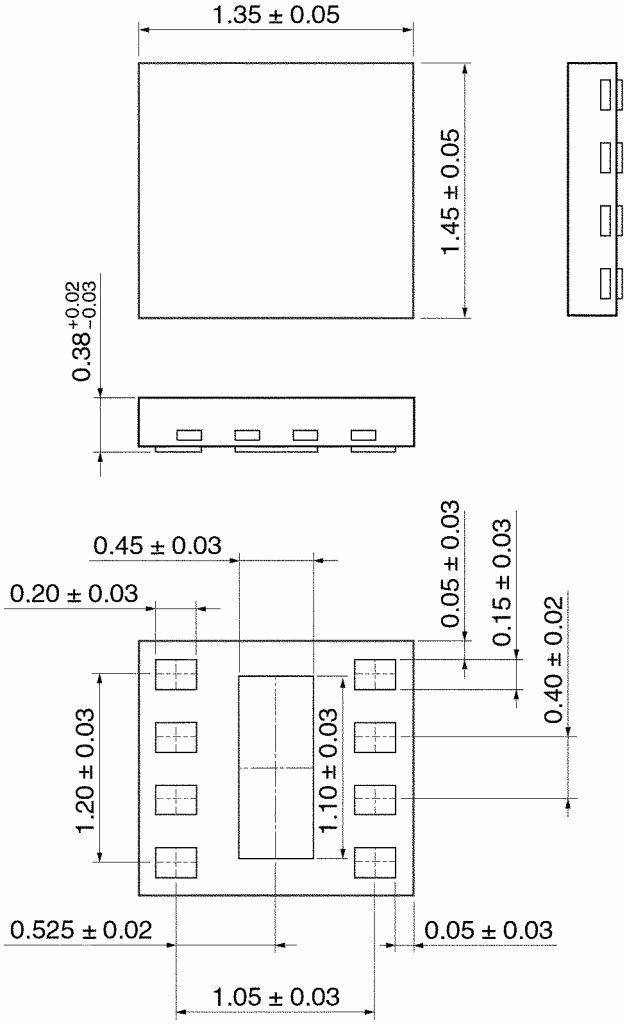

Weight: 0.002 g (typ.)

RESTRICTIONS ON PRODUCT USE

20070701-EN GENERAL

- The information contained herein is subject to change without notice.
- TOSHIBA is continually working to improve the quality and reliability of its products. Nevertheless, semiconductor devices in general can malfunction or fail due to their inherent electrical sensitivity and vulnerability to physical stress. It is the responsibility of the buyer, when utilizing TOSHIBA products, to comply with the standards of safety in making a safe design for the entire system, and to avoid situations in which a malfunction or failure of such TOSHIBA products could cause loss of human life, bodily injury or damage to property.
  In developing your designs, please ensure that TOSHIBA products are used within specified operating ranges as set forth in the most recent TOSHIBA products specifications. Also, please keep in mind the precautions and conditions set forth in the “Handling Guide for Semiconductor Devices,” or “TOSHIBA Semiconductor Reliability Handbook” etc.
- The TOSHIBA products listed in this document are intended for usage in general electronics applications (computer, personal equipment, office equipment, measuring equipment, industrial robotics, domestic appliances, etc.).These TOSHIBA products are neither intended nor warranted for usage in equipment that requires extraordinarily high quality and/or reliability or a malfunction or failure of which may cause loss of human life or bodily injury (“Unintended Usage”). Unintended Usage include atomic energy control instruments, airplane or spaceship instruments, transportation instruments, traffic signal instruments, combustion control instruments, medical instruments, all types of safety devices, etc.. Unintended Usage of TOSHIBA products listed in his document shall be made at the customer’s own risk.
- The products described in this document shall not be used or embedded to any downstream products of which manufacture, use and/or sale are prohibited under any applicable laws and regulations.
- The information contained herein is presented only as a guide for the applications of our products. No responsibility is assumed by TOSHIBA for any infringements of patents or other rights of the third parties which may result from its use. No license is granted by implication or otherwise under any patents or other rights of TOSHIBA or the third parties.
- Please contact your sales representative for product-by-product details in this document regarding RoHS compatibility. Please use these products in this document in compliance with all applicable laws and regulations that regulate the inclusion or use of controlled substances. Toshiba assumes no liability for damage or losses occurring as a result of noncompliance with applicable laws and regulations.