AK4120

Sample Rate Converter with Mixer and Volume

GENERAL DESCRIPTION

The AK4120 is a stereo asynchronous sample rate converter. The input sample rate range is from 8kHz to 48kHz. The output sample rate is fixed at 32kHz, 44.1kHz, 48kHz or 96kHz. AK4120 includes a digital mixer and digital volume control. Applications for this device include pro audio mastering, consumer format conversion and desktop audio production and playback.

FEATURES

- ☐ **Stereo Asynchronous Sample Rate Converter**
- ☐ **Digital Mixer**
- ☐ **Digital Volume**
- ☐ **Input Sample Rate Range (FSI): 8kHz to 48kHz**
- ☐ **Output Sample Rate (FSO): 32kHz, 44.1kHz, 48kHz and 96kHz**
- ☐ **Input to Output Sample Rate Ratio: FSO/FSI = 0.667 to 6**
- ☐ **THD+N: –113dB at 1kHz input**
- ☐ **I/F format: MSB justified (20bit), LSB justified (16bit/20bit), I^2S**
- ☐ **Master clock: 256/512fs**
- ☐ **3-wire Serial or I^2C Bus µP I/F for mode setting**
- ☐ **Power Supply: 2.7 to 3.6V**

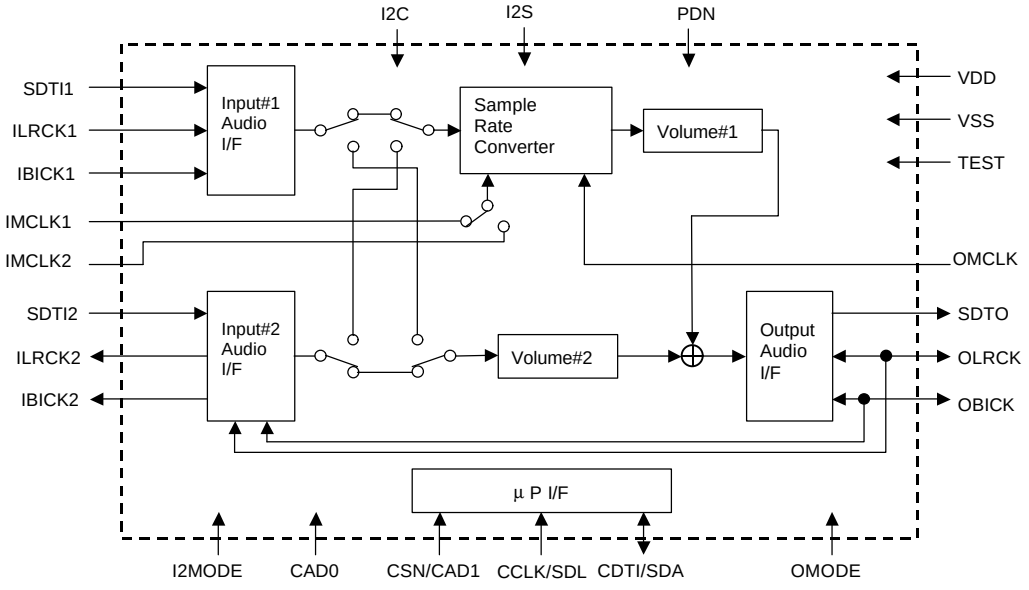

■ Ordering Guide

AK4120VF	-40 ~ +85°C	24pin VSOP (0.65mm pitch)
AKD4120		Evaluation Board for AK4120

■ Pin Layout

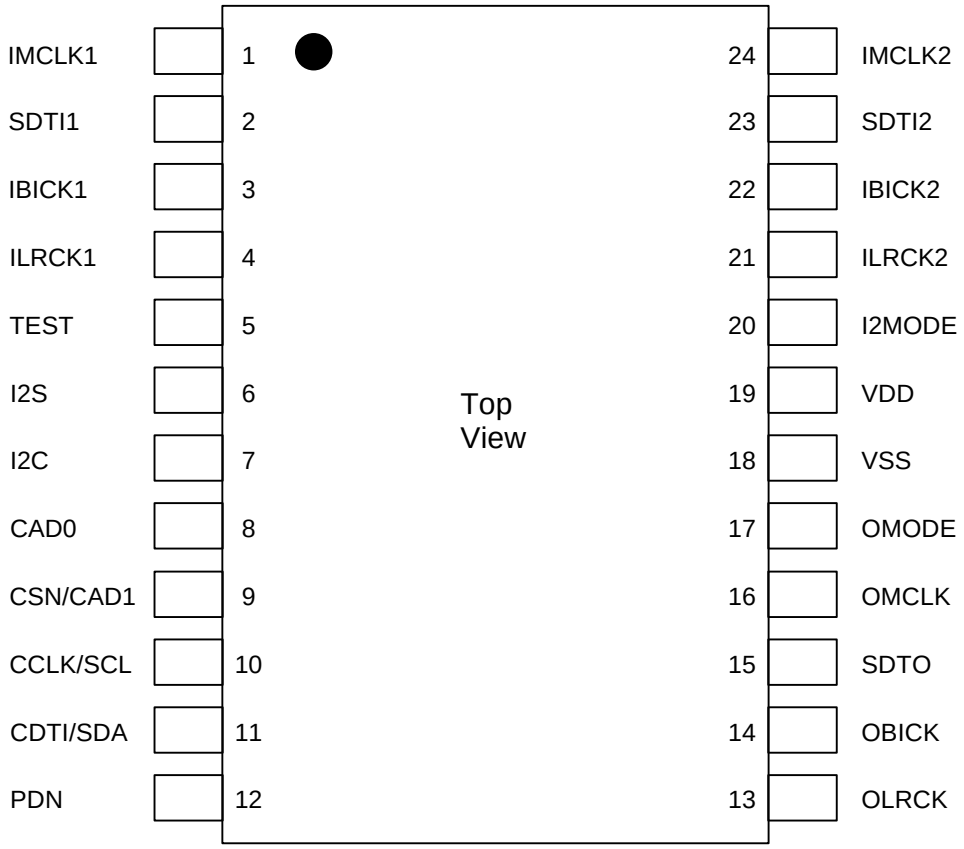

PIN/FUNCTION

No.	Pin Name	I/O	Function
1	IMCLK1	I	Master Clock Input Pin for Input#1
2	SDTI1	I	Audio Serial Data Input Pin for Input#1
3	IBICK1	I	Audio Serial Data Clock Pin for Input#1
4	ILRCK1	I	L/R Clock Pin for Input#1
5	TEST	I	Test Pin. Connect to VSS.
6	I2S	I	Audio I/F Select Pin "L": Set by Register, "H": I^2S
7	I2C	I	I^2C Select Pin. "L": 3-wire, "H": I^2C
8	CAD0	I	Chip Address 0 Pin
9	CSN	I	Chip Select Pin in 3wire serial control mode in 3-wire Serial Control Mode.
	CAD1	I	Chip Address 1 Pin in I^2C control mode.
10	CCLK	I	Control Data Clock Pin in 3wire serial control mode in 3-wire Serial Control Mode.
	SCL	I	Control Data Clock Pin in I^2C control mode.
11	CDTI	I	Control Data Input Pin in 3wire serial control mode in 3-wire Serial Control Mode.
	SDA	I/O	Control Data Pin in I^2C serial control mode in I^2C control mode.
12	PDN	I	Power-Down pin When "L", the AK4120 is powered-down and reset.
13	OLRCK	I/O	L/R Clock Pin for Output
14	OBICK	I/O	Audio Serial Data Clock Pin for Output
15	SDTO	O	Audio Serial Data Pin for Output
16	OMCLK	I	Master Clock Pin for Output
17	OMODE	I	Master/Slave select pin for Output Audio Data "L": Slave, "H": Master
18	VSS	I	Digital Ground Pin
19	VDD	I	Digital Power Supply Pin, 3.3V
20	I2MODE	I	Master/Slave select pin for Input Audio Data #2 "L": Slave, "H": Master
21	ILRCK2	I/O	L/R Clock Pin for Input#2
22	IBICK2	I/O	Audio Serial Data Clock Pin for Input#2
23	SDTI2	I	Audio Serial Data Input Pin for Input#2
24	IMCLK2	I	Master Clock Input Pin for Input#2

ABSOLUTE MAXIMUM RATINGS

(VSS=0V; Note 1)

Parameter	Symbol	min	max	Units
Power Supplies	VDD	-0.3	4.6	V
Input Current, Any Pin Except Supplies	IIN	-	±10	mA
Input Voltage	VIN	-0.3	VDD+0.3	V
Ambient Temperature (Power applied)	Ta	-40	85	°C
Storage Temperature	Tstg	-65	150	°C

Note 1: All voltages with respect to ground.
WARNING: Operation at or beyond these limits may result in permanent damage to the device.
Normal operation is not guaranteed at these extremes.

RECOMMENDED OPERATING CONDITIONS

(VSS=0V; Note 2)

Parameter	Symbol	min	typ	max	Units
Power Supplies	VDD	2.7	3.3	3.6	V

Note 2: All voltages with respect to ground.

SRC PERFORMANCE

(Ta=-40~ 85°C; VDD = 2.7~3.6V; data = 20bit; measurement bandwidth = 20Hz~ FSO/2; unless otherwise specified.)

Parameter	Symbol	min	typ	max	Units
Resolution				20	Bits
Input Sample Rate (Note 3)	FSI	8		48	kHz
Output Sample Rate (Note 4)	FSO	32		96	kHz
Dynamic Range (Input= 1kHz, -60dBFS, Note 5)					
FSO/FSI=44.1kHz/48kHz		-	115	-	dB
FSO/FSI=48kHz/44.1kHz		-	116	-	dB
FSO/FSI=32kHz/48kHz		-	114	-	dB
FSO/FSI=96kHz/32kHz		-	119	-	dB
Worst Case (FSO/FSI=32kHz/48kHz)		112	-	-	dB
Dynamic Range (Input= 1kHz, -60dBFS, A-weighted, Note 5)					
FSO/FSI=44.1kHz/48kHz		-	117	-	dB
THD+N (Input= 1kHz, 0dBFS, Note 5)					
FSO/FSI=44.1kHz/48kHz		-	-112	-	dB
FSO/FSI=48kHz/44.1kHz		-	-113	-	dB
FSO/FSI=32kHz/48kHz		-	-111	-	dB
FSO/FSI=96kHz/32kHz		-	-111	-	dB
Worst Case (FSO/FSI=48kHz/8kHz)		-	-	-103	dB
Ratio between Input and Output Sample Rate (FSO/FSI, Note 6, Note 7)	FSO/FSI	0.667		6	-

Note 3. 32kHz~96kHz for INPUT#2 at Path Mode 0. 8kHz~96kHz at Path Mode 2 and 3.
Note 4. Min = 8kHz at Path Mode 2 and 3.
Note 5. Measured by Rohde & Schwarz UPD04, Rejection Filter= wide, 8192point FFT. Refer Figure 1 and Figure 2.
Note 6. The “0.667” is the ratio of FSO/FSI when FSI is 48kHz and FSO is 32kHz
Note 7. The “6” is the ratio when FSI is 8kHz and FSO is 48kHz.

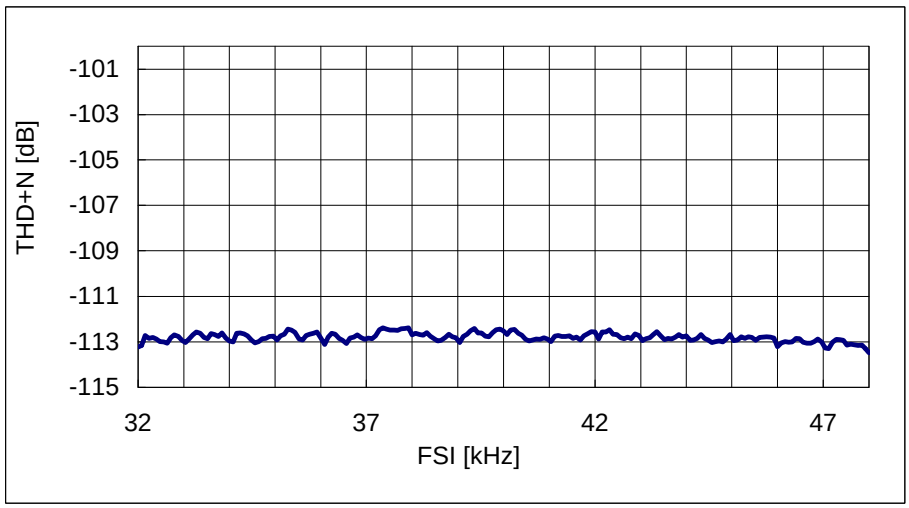

Figure 1: Input Sample Rate (FSI) vs. THD+N (FSO=48kHz)

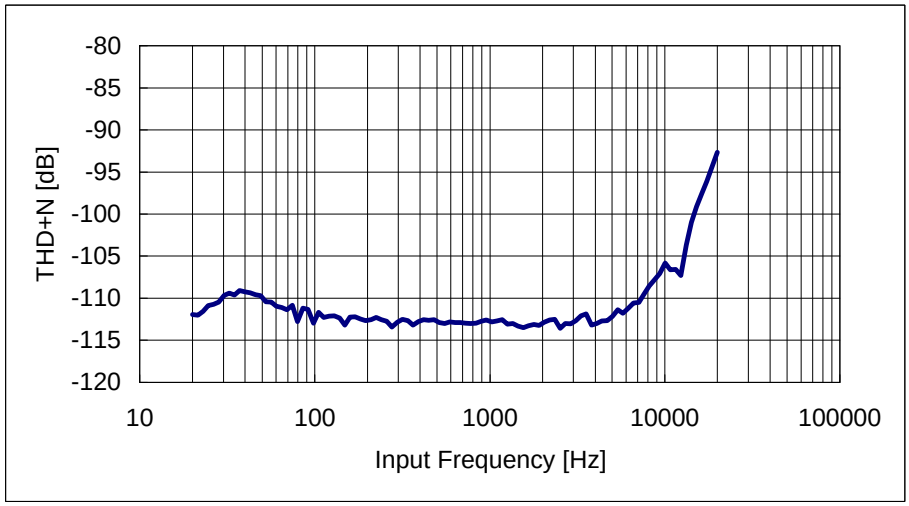

Figure 2: Input Frequency vs. THD+N (FSI=44.1kHz, FSO=48kHz)

DIGITAL FILTER

(Ta=-40~ 85°C; VDD=2.7~3.6V; FSO=FSI=fs)

Parameter		Symbol	min	typ	max	Units
Digital Filter						
Passband (Note 8)	-0.001dB	PB	0		0.4583fs	kHz
Stopband (Note 8)		SB	0.5417fs			kHz
Passband Ripple		PR			± 0.01	dB
Stopband Attenuation		SA	97			dB
Group Delay (Note 9)		GD	-	56.5	-	1/fs

Note 8. The passband and stopband frequencies scale with fs (system sampling rate).

Note 9. This value is the time from the rising edge of LRCK after data is input to rising edge of LRCK after data is output, when LRCK for Output data corresponds with LRCK for Input.(at 20bit MSB justified, 16bit and 20bit LSB justified)

DC CHARACTERISTICS

(Ta=-40~85°C; VDD=2.7~3.6V)

Parameter	Symbol	min	typ	Max	Units
Power Supply Current					
Normal operation: (PDN = “H”, Path Mode 0)					
FSI=FSO=48kHz at Slave Mode					
(I2MODE= OMODE = “L”): VDD=3.3V			8.5	-	mA
FSI=48kHz,FSO=96kHz at Master Mode					
(I2MODE=OMODE= “H”) : VDD=3.3V			10.2	-	mA
: VDD=3.6V			11.5	20	mA
Power down: PDN = “L” (Note 10)			10	100	μA
High-Level Input Voltage	VIH	0.7xVDD	-	-	V
Low-Level Input Voltage	VIL	-	-	0.3xVDD	V
High-Level Output Voltage (Iout=-400μA)	VOH	VDD-0.4	-	-	V
Low-Level Output Voltage					
(Except SDA pin: Iout=400μA);	VOL	-	-	0.4	V
(SDA pin: Iout= 3mA)	VOL	-	-	0.4	V
Input Leakage Current	Iin	-	-	± 10	μA

Note 10. All digital inputs including clock pins are held VSS.

SWITCHING CHARACTERISTICS

(Ta=-40~ 85°C; VDD=2.7~3.6V; C_L=20pF)

Parameter	Symbol	min	typ	max	Units
Master Clock Input (IMCLK1)					
Frequency	fCLK	2.048		24.576	MHz
Duty Cycle (at FSI > 33kHz)	dCLK	40		60	%
Duty Cycle (at FSI ≤ 33kHz)	dCLK	28		72	%
Master Clock Input (IMCLK2)					
Frequency	fCLK	2.048		24.576	MHz
Duty Cycle (at FSI > 33kHz)	dCLK	40		60	%
Duty Cycle (at FSI ≤ 33kHz)	dCLK	28		72	%
Master Clock Input (OMCLK)					
Frequency (Note 11)	fCLK	8.192		24.576	MHz
Duty Cycle (at FSI > 33kHz)	dCLK	40		60	%
Duty Cycle (at FSI ≤ 33kHz)	dCLK	28		72	%
L/R clock for Input data #1 (ILRCK1)					
Frequency	fs	8		48	kHz
Duty Cycle	Duty	48	50	52	%
L/R clock for Input data #2 (ILRCK2)					
Frequency (Note 12)	fs	8		96	kHz
Duty Cycle Slave Mode	Duty	48	50	52	%
Master Mode	Duty		50		%
L/R clock for Output data (OLRCK)					
Frequency (Note 13)	fs	32		96	kHz
Duty Cycle Slave Mode	Duty	48	50	52	%
Master Mode	Duty		50		%
Audio Interface Timing (Note 14)					
Input#1 at Path Mode 0 and 2					
Input#2 (Slave Mode) at Path Mode 1					
BICK Period	tBCK	325			ns
BICK Pulse Width Low	tBCKL	130			ns
BICK Pulse Width High	tBCKH	130			ns
LRCK Edge to BICK "↑" (Note 15)	tBLR	45			ns
BICK "↑" to LRCK Edge (Note 15)	tLRB	45			ns
SDTI1-2, Hold Time from BICK "↑"	tSDH	40			ns
SDTI1-2, Setup Time to BICK "↑"	tSDS	25			ns
Input#2 (Slave Mode) at Path Mode 0 and 3					
BICK Period	tBCK	162			ns
BICK Pulse Width Low	tBCKL	65			ns
BICK Pulse Width High	tBCKH	65			ns
LRCK Edge to BICK "↑" (Note 15)	tBLR	45			ns
BICK "↑" to LRCK Edge (Note 15)	tLRB	45			ns
SDTI2, Hold Time from BICK "↑"	tSDH	40			ns
SDTI2, Setup Time to BICK "↑"	tSDS	25			ns
Output (Slave Mode)					
OBICK Period	tBCK	162			ns
OBICK Pulse Width Low	tBCKL	65			ns
OBICK Pulse Width High	tBCKH	65			ns
OLRCK Edge to OBICK "↑" (Note 15)	tBLR	45			ns
OBICK "↑" to OLRCK Edge (Note 15)	tLRB	45			ns
OLRCK to SDTO (MSB)	tLRS			40	ns
OBICK "↓" to SDTO	tBSD			40	ns

Parameter	Symbol	min	typ	max	Units
Audio Interface Timing					
Input#2(Master Mode) at Path Mode 1					
BICK Frequency	fBCK		64fs		Hz
BICK Duty	dBCK		50		%
BICK "↓" to LRCK	tMBLR	–25		25	ns
BICK "↓" to SDTO	tBSD	–25		40	ns
SDTI2 Hold Time from BICK "↑"	tSDH	50			ns
SDTI2 Setup Time to BICK "↑"	tSDS	50			ns
Input#2 (Master Mode) at Path Mode0 and 3 Output (Master Mode)					
BICK Frequency	fBCK		64fs		Hz
BICK Duty	dBCK		50		%
BICK "↓" to LRCK	tMBLR	–20		20	ns
BICK "↓" to SDTO	tBSD	–20		30	ns
SDTI2 Hold Time from BICK "↑"	tSDH	40			ns
SDTI2 Setup Time to BICK "↑"	tSDS	25			ns

Note 11. Min is 2.048MHz at Path Mode 2 and 3.
Note 12. Max is 48kHz at Path Mode 1
Note 13. Min is 8kHz at Path Mode 2 and 3.
Note 14. BICK means all audio serial data clocks (IBICK1, IBICK2 and OBICK).
LRCK means all L/R clocks (ILRCK1, ILRCK2 and OLRCK).
Note 15. BICK rising edge must not occur at the same time as LRCK edge.

Parameter	Symbol	min	typ	max	Units
Control Interface Timing (3-wire Serial mode):					
CCLK Period	tCCK	200			ns
CCLK Pulse Width Low	tCCKL	80			ns
Pulse Width High	tCCKH	80			ns
CDTI Setup Time	tCDS	40			ns
CDTI Hold Time	tCDH	40			ns
CSN "H" Time	tCSW	150			ns
CSN "↓" to CCLK "↑"	tCSS	50			ns
CCLK "↑" to CSN "↑"	tCSH	50			ns
Control Interface Timing (I^2C â Bus mode):					
SCL Clock Frequency	fSCL	-		100	kHz
Bus Free Time Between Transmissions	tBUF	4.7		-	µs
Start Condition Hold Time (prior to first clock pulse)	tHD:STA	4.0		-	µs
Clock Low Time	tLOW	4.7		-	µs
Clock High Time	tHIGH	4.0		-	µs
Setup Time for Repeated Start Condition	tSU:STA	4.7		-	µs
SDA Hold Time from SCL Falling (Note 10)	tHD:DAT	0		-	µs
SDA Setup Time to SCL Rising	tSU:DAT	0.25		-	µs
Rise Time of Both SDA and SCL Lines	tR	-		1.0	µs
Fall Time of Both SDA and SCL Lines	tF	-		0.3	µs
Setup Time for Stop Condition	tSU:STO	4.0		-	µs
Maximum Pulse Width of Spike Noise Suppressed by Input Filter	tSP		30		ns
Power-down & Reset Timing					
PDN Pulse Width (Note 11)	tPD	150			ns

Note 10. Data must be held long enough to bridge the 300 ns transition time of SCL.
Note 11. The AK4120 can be reset by bringing PDN "L" to "H" upon power-up.
Note 12. I^2C is a registered trademark of Philips Semiconductors.

Purchase of Asahi Kasei Microsystems Co., Ltd I^2C components conveys a license under the Philips I^2C patent to use the components in the I^2C system, provided the system conform to the I^2C specifications defined by Philips.

■ Timing Diagram

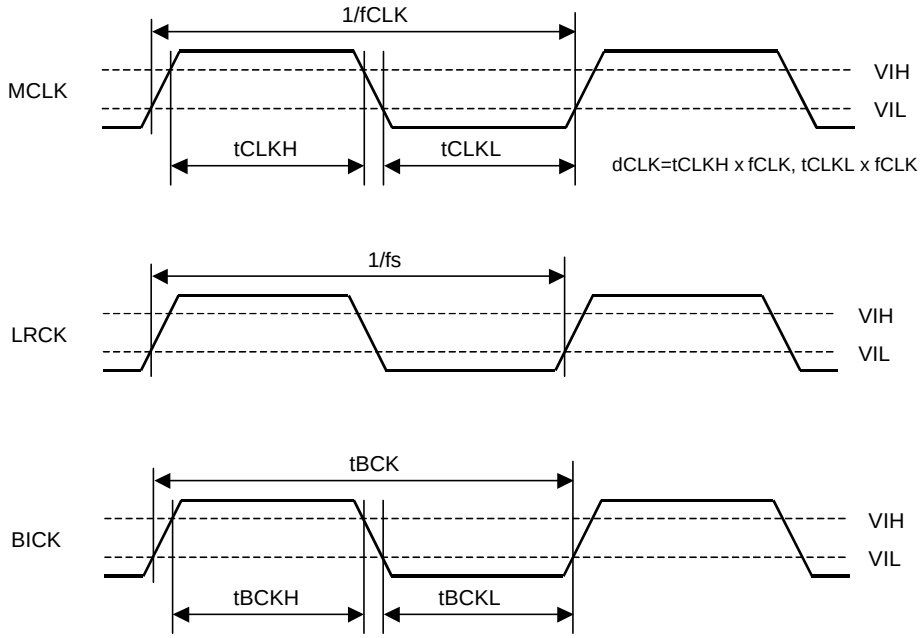

Clock Timing

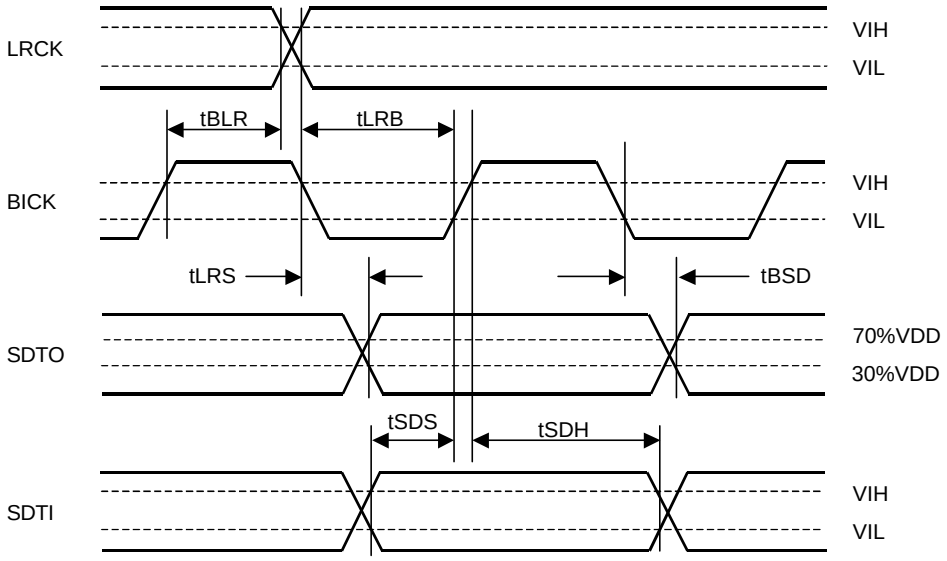

Audio Interface Timing at Slave Mode

Note: MCLK means IMCLK1, IMCLK2 and OCLK.
BICK means IBICK1,IBICK2 and OBICK.
LRCK means ILRCK1,ILRCK2 and OLRCK.
SDTI means SDTI1 and SDTI2.

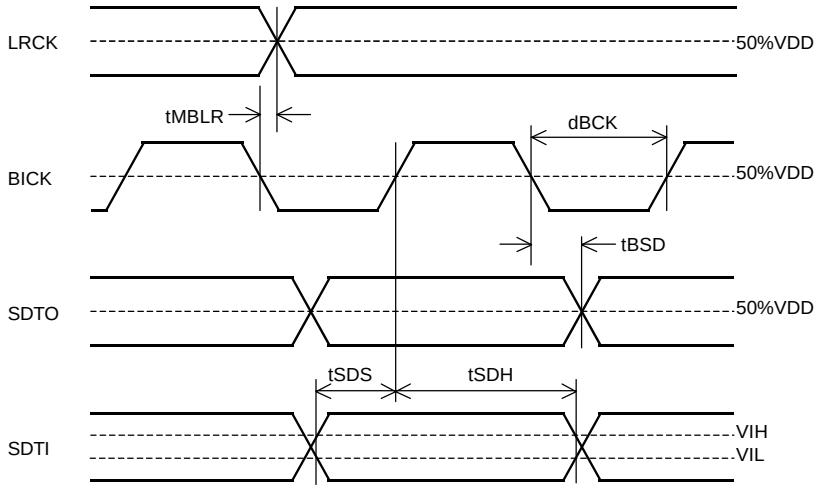

Audio Interface Timing at Master Mode

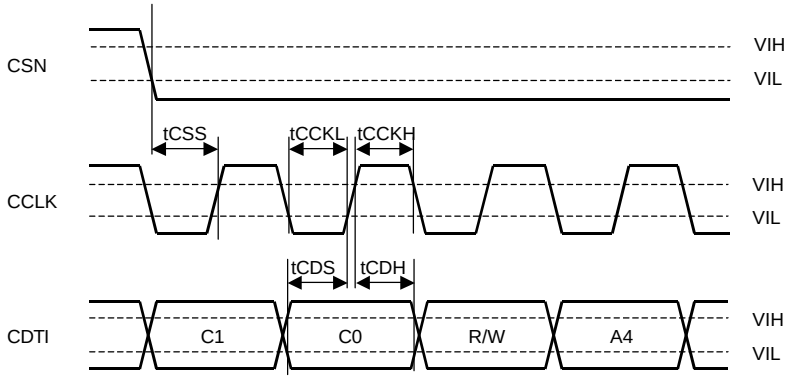

WRITE Command Input Timing (3-wire Serial mode)

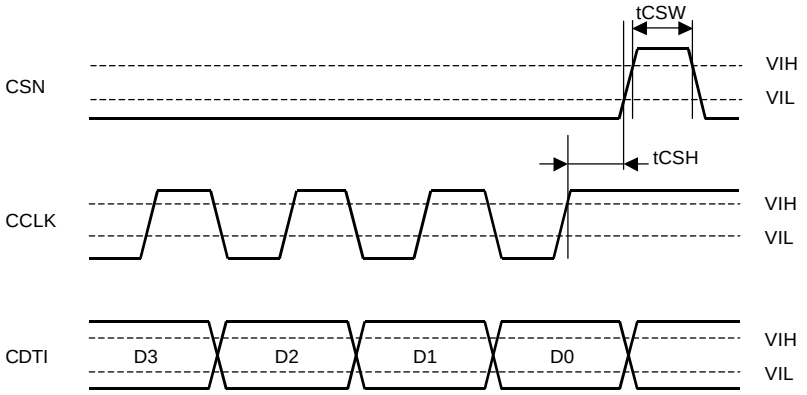

WRITE Data Input Timing (3-wire Serial mode)

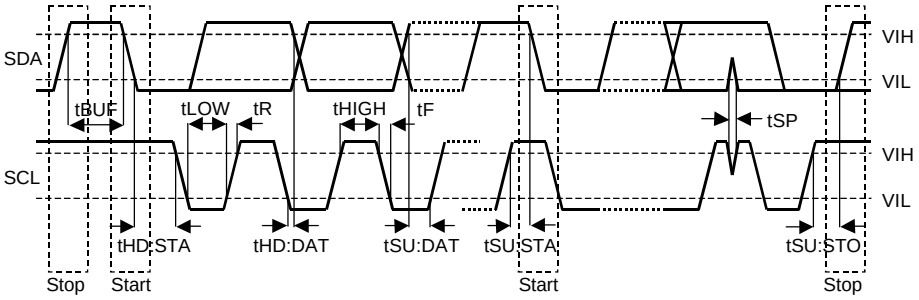

I^{2}C Bus mode Timing

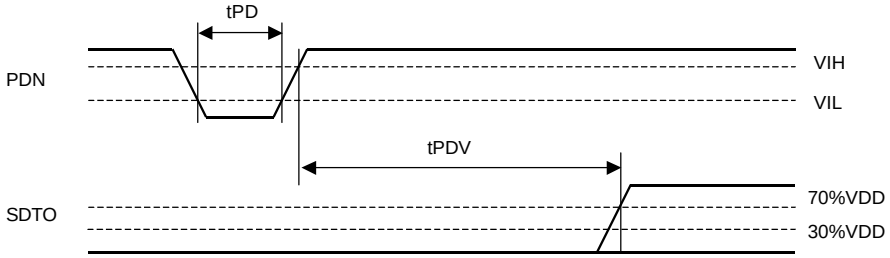

Power-down & Reset Timing

OPERATION OVERVIEW

■ I/O Data flow

The AK4120 has two input audio data interfaces (Input#1 and Input#2). The AK4120 has four modes of operation, each corresponding to a different internal audio path as shown in Table 1. These path modes are selected by the PATH1-0 bits.

Path Mode	PATH1-0 bits	Output Data
0 (see Figure 3)	"00"	The sample rate of Input#1 data is converted by SRC block. This converted data paths through Volume#1 and Input#2 data is paths through Volume#2. These data are mixed and this mixed data is output. The sample rata of Input#1 is defined by IMCLK1 and the sample rate of Output data is defined by OMCLK. The sample rate of Input#2 should be same as Output data.
1 (see Figure 4)	"01"	The sample rate of Input#2 data is converted by SRC block. This converted data volume is controlled by Volume#1 and this data is output. The sample rata of Input#2 is defined by IMCLK2 and the sample rate of Output data is defined by OMCLK.
2 (see Figure 5)	"10"	Input#1 data paths through Volume#2 and is output. Output data should synchronous with IMCLK.
3 (see Figure 6)	"11"	Input#2 data paths through Volume#2 and is output. Input#2 should synchronous with OMCLK.

Table 1. Path Mode

Note: When Path Mode is changed, the AK4120 should be powered down using the "PW" bit

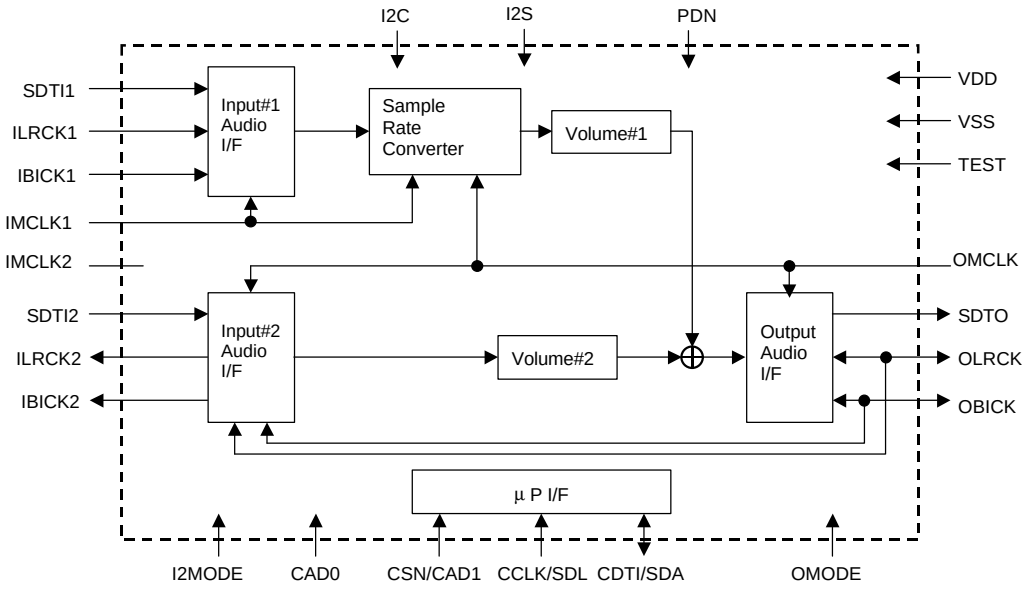

Figure 3. Path Mode 0 (Input#1 SRC + Mixer)

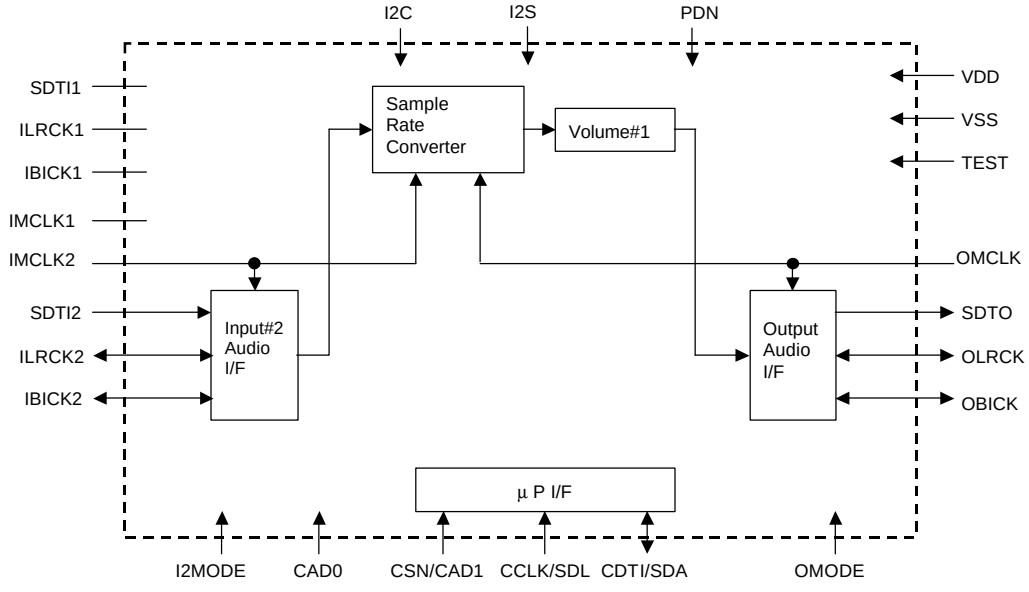

Figure 4. Path Mode 1 (Input#2 SRC)

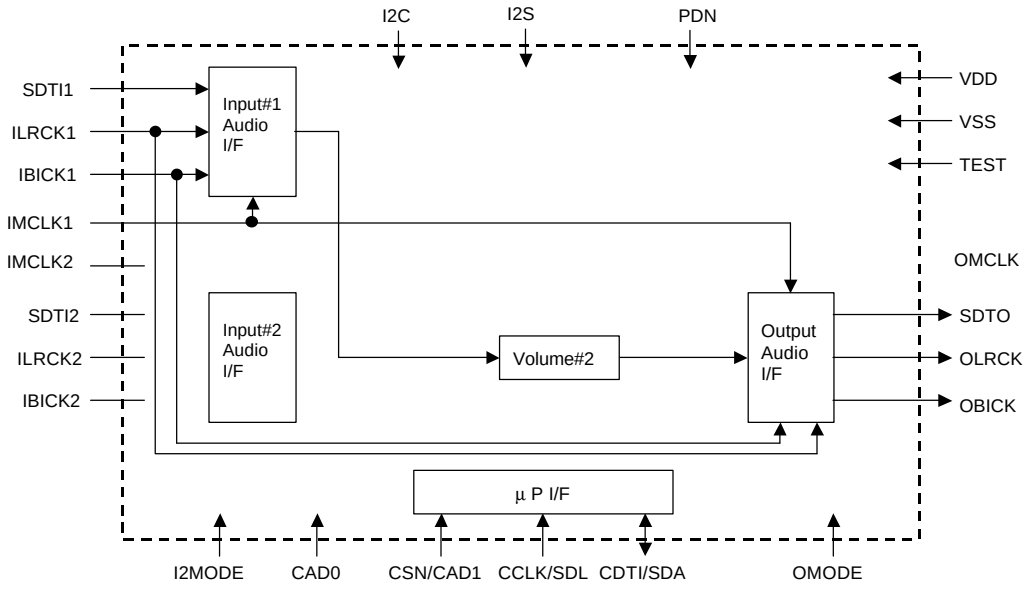

Figure 5. Path Mode 2 (Input#1 through output)

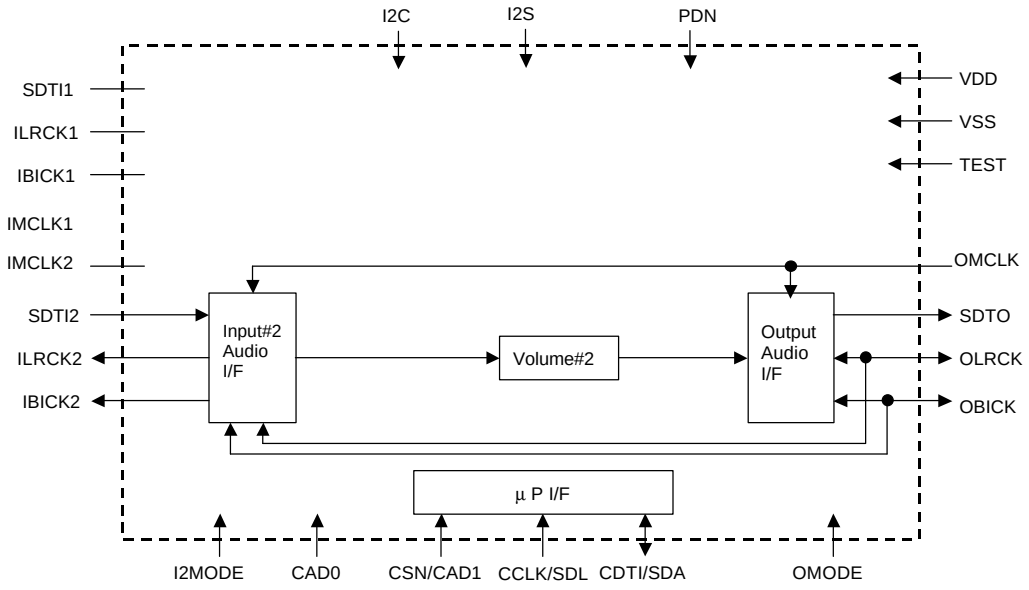

Figure 6. Path Mode 3 (Input#2 through output)

■ System Clock

The external clocks required to operate the AK4120 in each mode are shown in Table 3 and Table 4. The Input#1 port works in slave mode only. The Input#2 and Output ports have both slave and master modes that are selected by the IMODE2 and OMODE pins. The required external clock shown in Table 2 should be always present whenever the AK4120 is in a normal operating mode (PDN=”H”).

Path Mode	Synchronizing Group A	SRC	Synchronizing Group B	(Not used)
0	SDTI1	Active	SDTI2, SDTO	-
1	SDTI2	Active	SDTO	SDTI1
2	SDTI1, SDTO	(Not used)	-	SDTI2
3	SDTI2, SDTO	(Not used)	-	SDTI1

Table 2. Clock Synchronization

Path Mode	IMCLK1	IMCLK2	OMCLK
0	Input	(Not used)	Input
1	(Not used)	Input	Input
2	Input	(Not used)	(Not used)
3	(Not used)	(Not used)	Input

Table 3. Master Clock

Path Mode	ILRCK1, IBICK1	ILRCK2, IBICK2		OLRC, OBICK	
		I2MODE = “L”	I2MODE = “H”	OMODE= “L”	OMODE= “H”
0	Input	(Not used)	Output	Input	Output
1	(Not used)	Input	Output	Input	Output
2	Input	(Not used)	(Not used)	(Not used)	Output
3	(Not used)	(Not used)	Output	Input	Output

Table 4. LRCK/BICK

(1) Path Mode 0
IMCLK1 does not need to be synchronized with OMCLK when using Path Mode 1. IMCLK1 should be synchronized with ILRCK1 (clock phase is not important). STDI2 should be synchronized with OLRCK and OBICK. When the output is slaved, OMCLK should be synchronized with OLRCK (clock phase is not important). When input#2 is in slave mode, OLRCK and OBICK are used while ILRCK2 and IBICK2 are not.

(2) Path Mode 1
IMCKL2 does not need to be synchronized with OMCLK. When Input#2 port is in slave mode, IMCLK2 should be synchronized with ILRCK2 (clock phase is not important). When Output#2 port is in slave mode, OMCLK should be synchronized with OLRCK (clock phase is not important).

(3) Path Mode 2
IMCLK1 should be synchronized with ILRCK1 (clock phase is not important). SDTO should be synchronized with ILRCK1 and IBICK1. When the Output is in slave mode, the OLRCK and OBICK pins are not used. In master mode, ILRCK1 is output through OLRCK and IBICK1 is output through OBICK.

(4) Path Mode 3
OMCLK should be synchronized with OLRCK (clock phase is not important). SDTI2 should be synchronized with OLRCK and OBICK. When Input#2 is in slave mode, ILRCK2 and IBICK2 pins are not used. In master mode, OLRCK is output through ILRCK2 and OBICK is output through IBICK2.

The frequency of IMCLK1, IMCLK2, and OMCLK are fixed based on the sampling rate and clock speed (256fs/512fs). IMCKS1, IMCKS2 and OMCKS bits in register 01H select clock speed.

LRCK	MCLK (MHz)		BICK (MHz)
fs	256fs	512fs	64fs
32.0kHz	8.1920	16.384	2.0480
44.1kHz	11.2896	22.5792	2.8224
48.0kHz	12.2880	24.576	3.0720
88.2kHz	22.5792	N/A	5.6448
96kHz	24.5760	N/A	6.1440

Table 5. System Clock Example

■ Volume

AK4120 has two digital volumes (Volume#1 and Volume#2). Volume#1 can control the volume level of data from Input#1 while in Path Mode 0 or from Input#2 while in Path Mode 1. It then passes this data through SRC block. Volume#2 can control the volume level of data from Input#2 while in Path Mode 0 and Path Mode 3, or from Input#1 in Path Mode 2. These volume ranges are from –83.25dB to 12dB in 0.75dB steps. The volume level and mute of each channel can be controlled by register 3-6H.

■ Audio Serial Interface Format

Four serial data modes can be selected by the I2S pin and D5-D0 bits in register 00H as shown in Table 6~8. In all modes the serial audio data is MSB-first, 2's compliment format. The SDTO is clocked out on the falling edge of BICKO and the SDTI1 and SDTI2 are latched on the rising edge of BICKI1 and BICKI2.

I2S pin	DIFI11	DIFI10	SDTI1	LRCK	
L	0	0	20bit, MSB justified	H/L	Default
L	0	1	20bit, I^2S	L/H	
L	1	0	20bit, LSB justified	H/L	
L	1	1	16bit, LSB justified	H/L	
H	X	X	20bit, I^2S	L/H	

Table 6. Audio data formats for Input#1 port

I2S pin	DIFI21	DIFI20	SDTI2	LRCK	
L	0	0	20bit, MSB justified	H/L	Default
L	0	1	20bit, I^2S	L/H	
L	1	0	20bit, LSB justified	H/L	
L	1	1	16bit, LSB justified	H/L	
H	X	X	20bit, I^2S	L/H	

Table 7. Audio data formats for Input#2 port

I2S pin	DIFO1	DIFO0	SDTO	LRCK	
L	0	0	20bit, MSB justified	H/L	Default
L	0	1	20bit, I^2S	L/H	
L	1	0	20bit, LSB justified	H/L	
L	1	1	16bit, LSB justified	H/L	
H	X	X	20bit, I^2S	L/H	

Table 8. Audio data formats for Output port

Note: When the Audio Serial Interface Mode is changed, the AK4120 should be powered down using the PW bit. ("PW"=0)

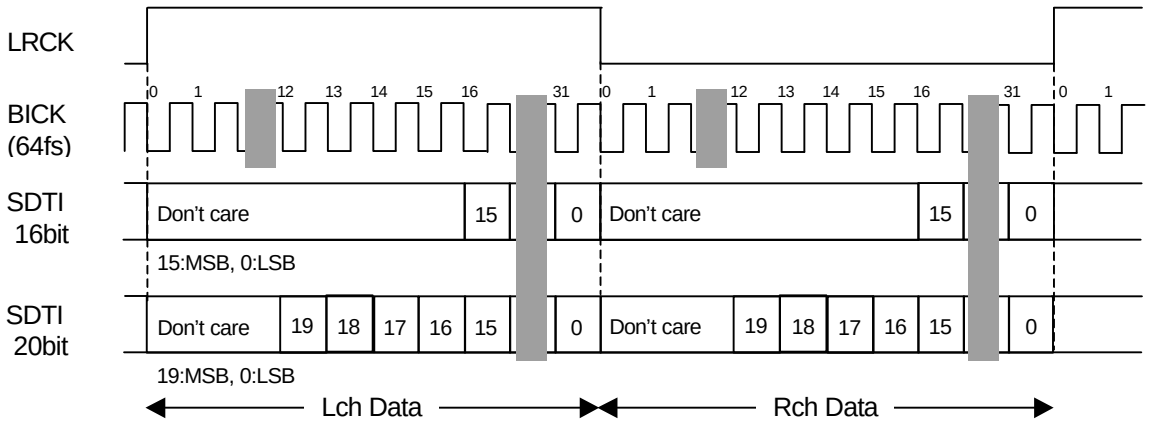

Figure 7. LSB justified Timing

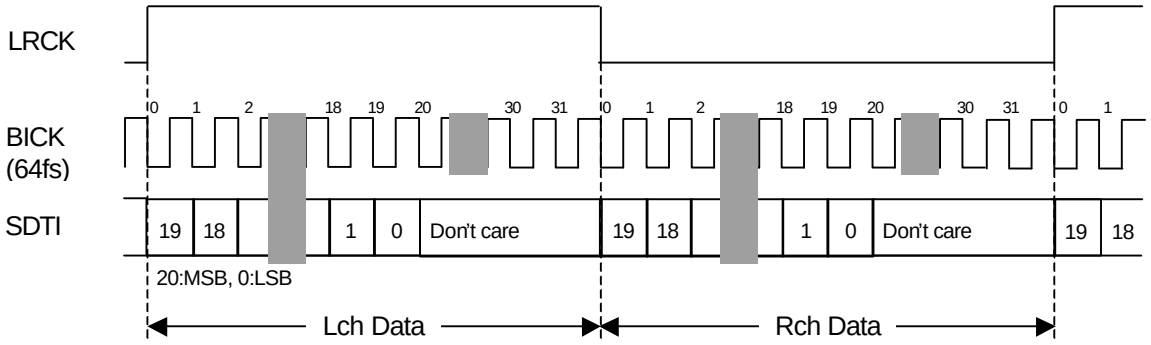

Figure 8. MSB justified Timing

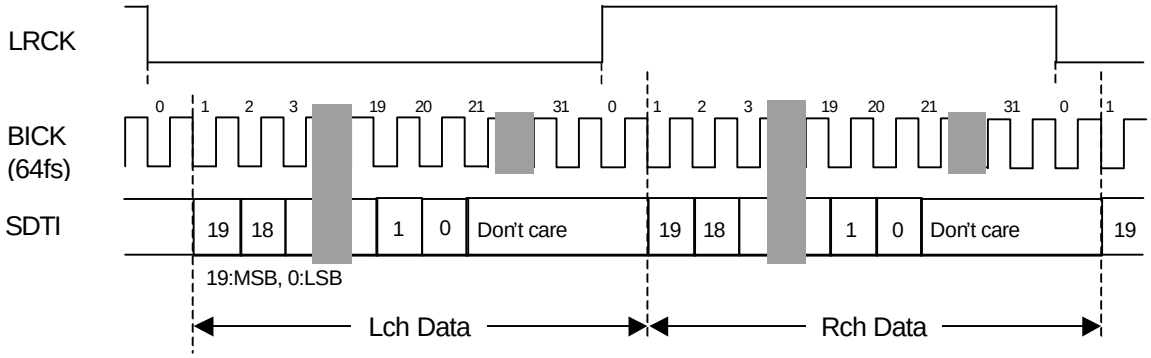

Figure 9. I^2S Timing

■ Serial Control Interface

The AK4120 is controlled via registers. Internal registers can be written using one of two control modes, I2C or 3-wire, that are selected via I2C pin. PDN = “L” initializes the registers to their default values. When the I2C pin is changed, the AK4120 should be reset using the PDN pin.

* When PDN= “L”, internal registers cannot be written.
* The AK4120 does not support the read command while using the 3-wire Serial Control Mode.

(1) 3-wire Serial Control Mode (I2C = “L”)

Internal registers may be written to using the 3 wire µP interface pins (CSN, CCLK and CDTI). The data on this interface consists of a Chip address that is fixed to “10” and a Read/Write status (1bit, Fixed to “1”; Write only). Also a Register address (MSB first, 5bits) and Control data (MSB first, 8bits) are used. Address and data is clocked in on the rising edge of CCLK and data is clocked out on the falling edge. For write operations, data is latched after a low-to-high transition of CSN. The clock speed of CCLK is 5MHz(max)

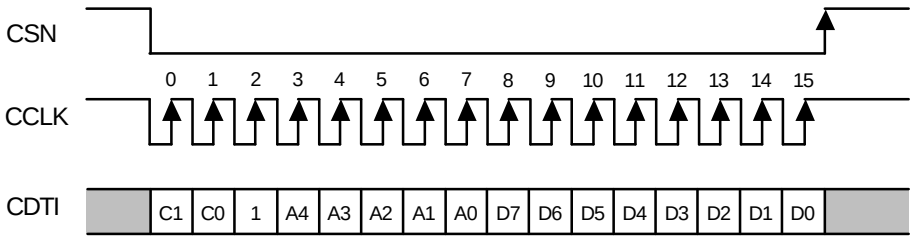

C1-C0: Chip Address (C1:1,C0:CAD0)
R/W: Read/Write (Fixed to “1” : Write only)
A4-A0: Register Address
D7-D0: Control Data

Figure 10. 3-wire Serial Control I/F Timing

Note: Do not write to the address except 00H through 06H.

2) I^{2}C-bus Control Mode (I2C= “H”)

The AK4120 supports the standard I^{2}C-bus interface (max:100kHz). Then AK4120 cannot support fast-mode I^{2}C (max: 400kHz).

(2)-1. WRITE Operations

Figure 11 shows the data transfer sequence in I^{2}C-bus mode. All commands are preceded by a START condition. A HIGH to LOW transition on the SDA line while SCL is HIGH indicates a START condition (Figure 17). After the START condition, a slave address is sent. This address is 7 bits long followed by an eighth bit which is a data direction bit (R/WN). The most significant five bits of the slave address are fixed as “00100”. The next two bits are CAD1 and CAD0 (device address bits). These two bits identify the specific device on the bus. The hard-wired input pins (CAD1 pin and CAD0 pin) set them (Figure 12). If the slave address matches that of the AK4120, the AK4120 generates the acknowledge and the operation is executed. The master must generate an acknowledge-related clock pulse and release the SDA line (HIGH) during the acknowledge clock pulse (Figure 18). A “1” for R/WN bit indicates that the read operation is to be executed. A “0” indicates that the write operation is to be executed.

The second byte is the control register address of the AK4120. The format is MSB first, and three most significant bits are fixed to zero (Figure 13). Subsequent bytes contain control data. The format is MSB first, 8-bits (Figure 14). The AK4120 generates an acknowledge after each byte has been received. A data transfer is always terminated by a STOP condition generated by the master. A LOW to HIGH transition on the SDA line while SCL is HIGH defines a STOP condition (Figure 17).

The AK4120 is capable of more than one byte write operation per sequence. After receipt of the third byte, the AK4120 generates an acknowledge, and awaits the next data. The master can transmit multiple bytes rather than terminating the write cycle after the first data byte is transferred. After the receipt of each data, the internal 5-bit address counter is incremented by one, and the next data is taken into next address automatically. If the address exceeds 06H prior to generating a stop condition, the address counter will “roll over” to 00H and the previous data will be overwritten. (If an address greater than 07H is set, this function will not work properly.)

The data on the SDA line must be stable during the HIGH period of the clock. The HIGH or LOW state of the data line can only change when the clock signal on the SCL line is LOW (Figure 19) except for START and STOP conditions.

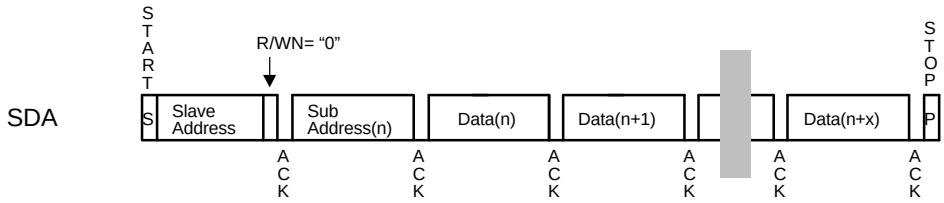

Figure 11. Data transfer sequence at the I^{2}C-bus mode

0	0	1	0	0	CAD1	CAD0	R/WN

(Those CAD1/0 should match with CAD1/0 pins)

Figure 12. The first byte

0	0	0	A4	A3	A2	A1	A0

Figure 13. The second byte

D7	D6	D5	D4	D3	D2	D1	D0

Figure 14. Byte structure after the second byte

(2)-2. READ Operations
To enable a READ operation in the AK4120, set R/WN bit = “1”. After transmission of data, the master can read the next data address by generating an acknowledge instead of terminating the write cycle after the receipt the first data word. After the receipt of each data, the internal 5-bit address counter is incremented by one, and the next data is taken into next address automatically. If the address exceeds 06H prior to generating the stop condition, the address counter will “roll over” to 00H and the previous data will be overwritten. If an address greater than 07H is set, this function will not work properly.)

The AK4120 supports two basic read operations: CURRENT ADDRESS READ and RANDOM READ.

(2)-2-1. CURRENT ADDRESS READ
The AK4120 contains an internal address counter that maintains the address of the last word accessed, incremented by one. Therefore, if the last access (either a read or write) were to address n, the next CURRENT READ operation would access data from the address n+1. After receipt of the slave address with R/WN bit set to “1”, the AK4120 generates an acknowledge, transmits 1data byte whose address is set by the internal address counter and increments the internal address counter by 1. If the master does not generate an acknowledge to the data but instead generates a the stop condition, the AK4120 ceases transmission

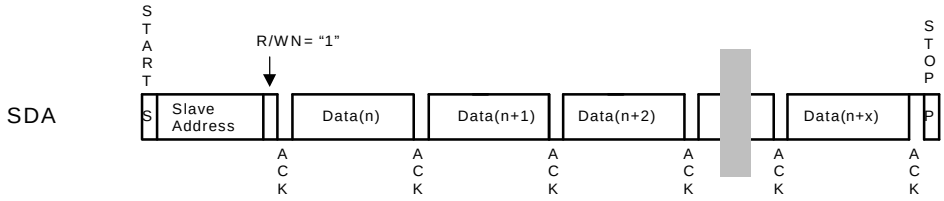

Figure 15. CURRENT ADDRESS READ

(2)-3-2. RANDOM READ
Random read operation allows the master to access any memory location at random. Prior to issuing the slave address with the R/WN bit set to “1”, the master must first perform a “dummy” write operation. The master issues a start request, slave address(R/WN=“0”) and the register address to read. After the register address’s acknowledged, the master immediately reissues the start request and the slave address with the R/WN bit set to “1”. The AK4120 generates a stop condition instead of an acknowledge, an acknowledge, 1byte data and increments the internal address counter by 1. If the master generates a stop condition instead of an acknowledge, the AK4120 stops transmitting.

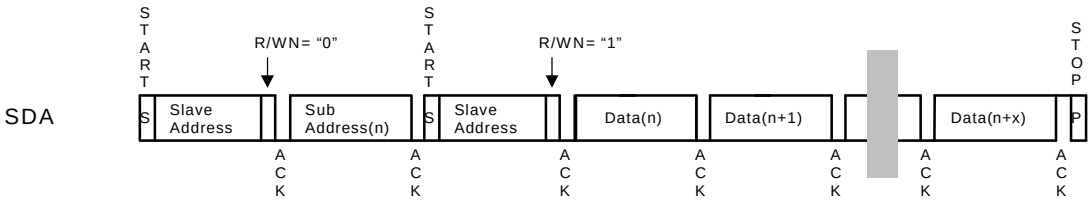

Figure 16. RANDOM ADDRESS READ

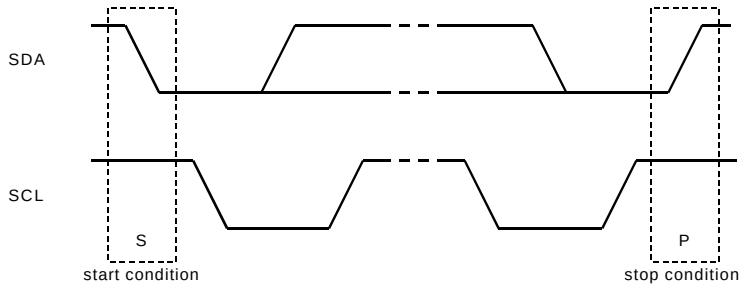

Figure 17. START and STOP conditions

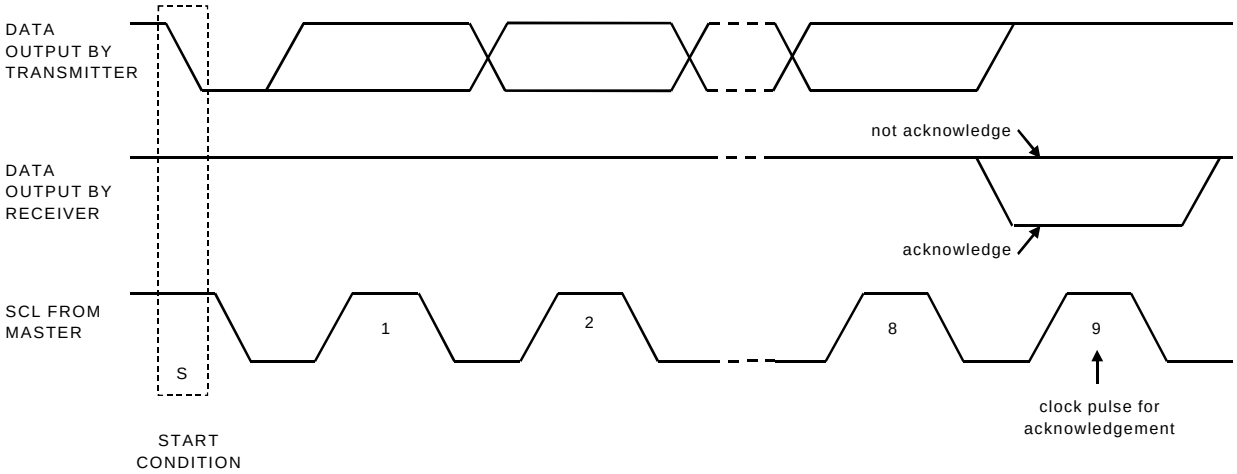

Figure 18. Acknowledge on the I^2C-bus

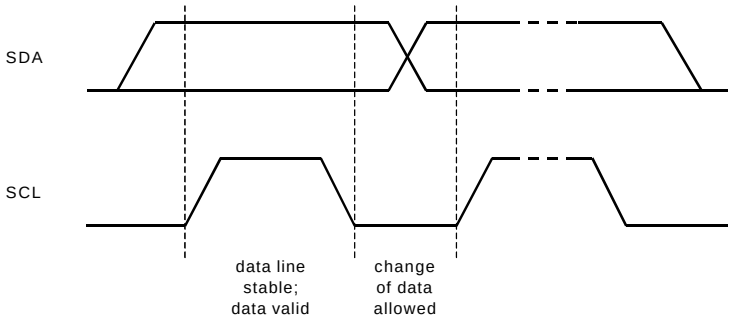

Figure 19. Bit transfer on the I^2C-bus

Note: Only addresses 00H through 06H are valid write addresses. All others should not be read from or written to.

■ System Reset

The AK4120 is reset by bringing the power down pin “PDN” =“L”. The digital filters are also reset when this occurs. The AK4120 should be reset once by bringing PDN =“L” upon power-up. After a reset, the required clocks shown in Table 2 must be input.

The SRC block starts 2*LRCK1 or 2*LRCK2 after a reset. The SRC block starts outputting data 2053*ORCK after a reset occurs. Before 2053*ORCK, the SRC block outputs “L”.

■ Zero cross detection function of Volume

When ZELM=“0”, the Zero Cross detection function is enabled. Then, if a Volume value is written to the register, the volume will not change until a Zero crossing is detected or this process times out. The ZTM1-0 bits in 01H set this timeout. When ZELM=“1”, Volume changes soon after volume value is written.

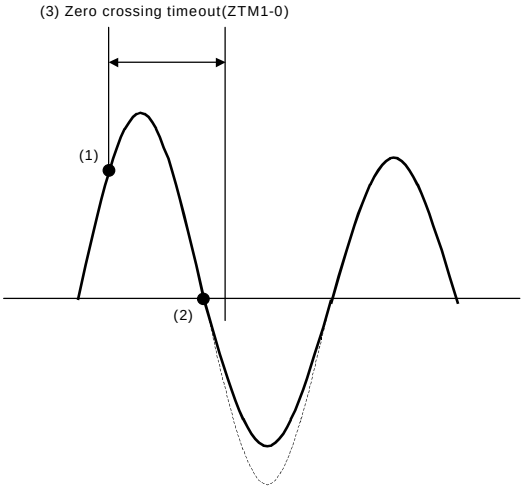

Figure 20. Zero crossing process

(1) At this point, volume value is written in register.
(2) This is a zero crossing point. At this point, volume is changed.
(3) This is time of Zero crossing timeout that is set by ZTM1-0.

■ Mapping of Program Registers

Addr	Register Name	D7	D6	D5	D4	D3	D2	D1	D0	Default
00H	Control 1	PW	0	DIFO1	DIFO0	DIFI21	DIFI20	DIFI11	DIFI10	80H
01H	Control 2	0	ZELM	ZTM1	ZTM0	0	OMCKS	IMCKS2	IMCKS1	20H
02H	Control 3	MUTE2R	MUTE2L	MUTE1R	MUTE1L	0	0	PATH1	PATH0	00H
03H	Lch Volume#1 Control	0	GAIN6	GAIN5	GAIN4	GAIN3	GAIN2	GAIN1	GAIN0	10H
04H	Rch Volume#1 Control	0	GAIN6	GAIN5	GAIN4	GAIN3	GAIN2	GAIN1	GAIN0	10H
05H	Lch Volume#2 Control	0	GAIN6	GAIN5	GAIN4	GAIN3	GAIN2	GAIN1	GAIN0	10H
06H	Lch Volume#2 Control	0	GAIN6	GAIN5	GAIN4	GAIN3	GAIN2	GAIN1	GAIN0	10H

Note: When the PDN goes to “L”, the registers are initialized to their default values.
Data must not be written to the address except 00H through 06H.

■ Register Definitions

Addr	Register Name	D7	D6	D5	D4	D3	D2	D1	D0
00H	Control 1	PW	0	DIFO1	DIFO0	DIFI21	DIFI20	DIFI11	DIFI10
Default		1	0	0	0	0	0	0	0

DIFI11-0: Audio Data Formats for Input#1 port (See Table 6).
DIFI21-0: Audio Data Formats for Input#2 port (See Table 7).
DIFO1-0: Audio Data Formats for Output port (See Table 8).

PW: Power down control
0: Power Down
At PW=”0”, internal registers can be written.
1: Normal Operation (Default)

Addr	Register Name	D7	D6	D5	D4	D3	D2	D1	D0
01H	Control 2	0	ZELM	ZTM1	ZTM0	0	OMCKS	IMCKS2	IMCKS1
Default		0	0	1	0	0	0	0	0

IMCKS1: Master Clock Speed of the Master Clock for Input#1 (IMCLK1)
0: 256fs(default)
1: 512fs

IMCKS2: Master Clock Speed of the Master Clock for Input#2 (IMCLK2)
0: 256fs(default)
1: 512fs

OMCKS: Master Clock Speed of the Master Clock for Output (OMCLK)
0: 256fs(default)
1: 512fs

Note: Set the PW= “0” when those master clocks are changed.

ZTM1-0:Duration of zero-crossing timeout when ZELM= “0”

ZTM1	ZTM0	Time of Timeout				
			48kHz	44.1kHz	32kHz	
0	0	513/fs	10.7ms	11.6ms	16.0ms	
0	1	1025/fs	21.4ms	23.2ms	32.0ms	
1	0	2049/fs	42.7ms	46.5ms	64.0ms	Default
1	1	4097/fs	85.4ms	92.9ms	128.0ms	

Note: Fs is the output sample rate

Table 9. Time of Timeout

ZELM: Select Zero Crossing Enable
0: Enable (Default)
1: Disable

Addr	Register Name	D7	D6	D5	D4	D3	D2	D1	D0
02H	Control 3	MUTE2R	MUTE2L	MUTE1R	MUTE1L	0	0	PATH1	PATH0
Default		0	0	0	0	0	0	0	0

PATH1-0: Path Mode Select (See Table 1 and Figure 3-4)

MUTE1L: Mute control for Lch of Volume#1
0: Mute off (Default)
1: Mute On

MUTE1R: Mute control for Rch of Volume#1
0: Mute off (Default)
1: Mute On

MUTE2L: Mute control for Lch of Volume#2
0: Mute off (Default)
1: Mute On

MUTE2R: Mute control for Rch of Volume#2
0: Mute off (Default)
1: Mute On

Addr	Register Name	D7	D6	D5	D4	D3	D2	D1	D0
03H	Lch Volume#1 Control	0	GAIN6	GAIN5	GAIN4	GAIN3	GAIN2	GAIN1	GAIN0
04H	Rch Volume#1 Control	0	GAIN6	GAIN5	GAIN4	GAIN3	GAIN2	GAIN1	GAIN0
05H	Lch Volume#2 Control	0	GAIN6	GAIN5	GAIN4	GAIN3	GAIN2	GAIN1	GAIN0
06H	Rch Volume#2 Control	0	GAIN6	GAIN5	GAIN4	GAIN3	GAIN2	GAIN1	GAIN0
Default		0	0	0	1	0	0	0	0

GAIN6-0: Volume control shown in Table 10 .
Volume Range: -83.25dB ~12dB(Step 0.75dB)

GAIN6-0	Volume Level	
00H	12dB	
01H	11.25dB	
02H	10.5dB	
:	:	
9H	0.75dB	
10H	0dB	Default
11H	-0.75dB	
:	:	
7DH	-81.75	
7EH	-82.50	
7FH	-83.25	

Table 10. Output Volume level

Note: |Gain error| < 0.3dB, |Step error| < 0.1dB.

SYSTEM DESIGN

Figure 21 illustrates a typical system connection diagram. An evaluation board is available which demonstrates this application circuit, the optimum layout, power supply arrangement and performance measurement results.

Condition: VDD=3.3V, 3-wire serial control mode, Chip Address = “10”
Path Mode 0, Input#2 and Output are slave mode

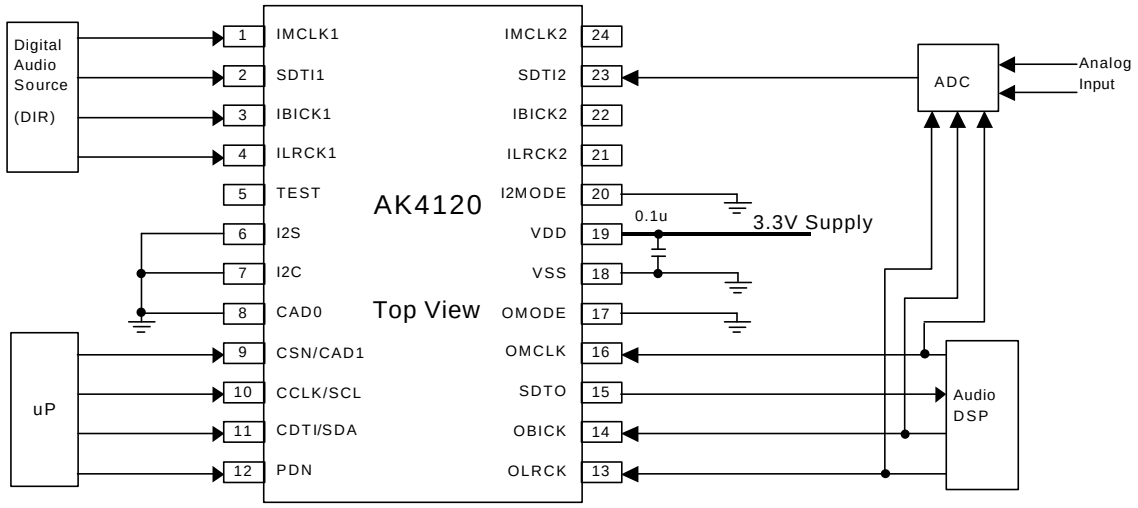

Figure 21. Example of a typical design

PACKAGE

24pin VSOP (Unit: mm)

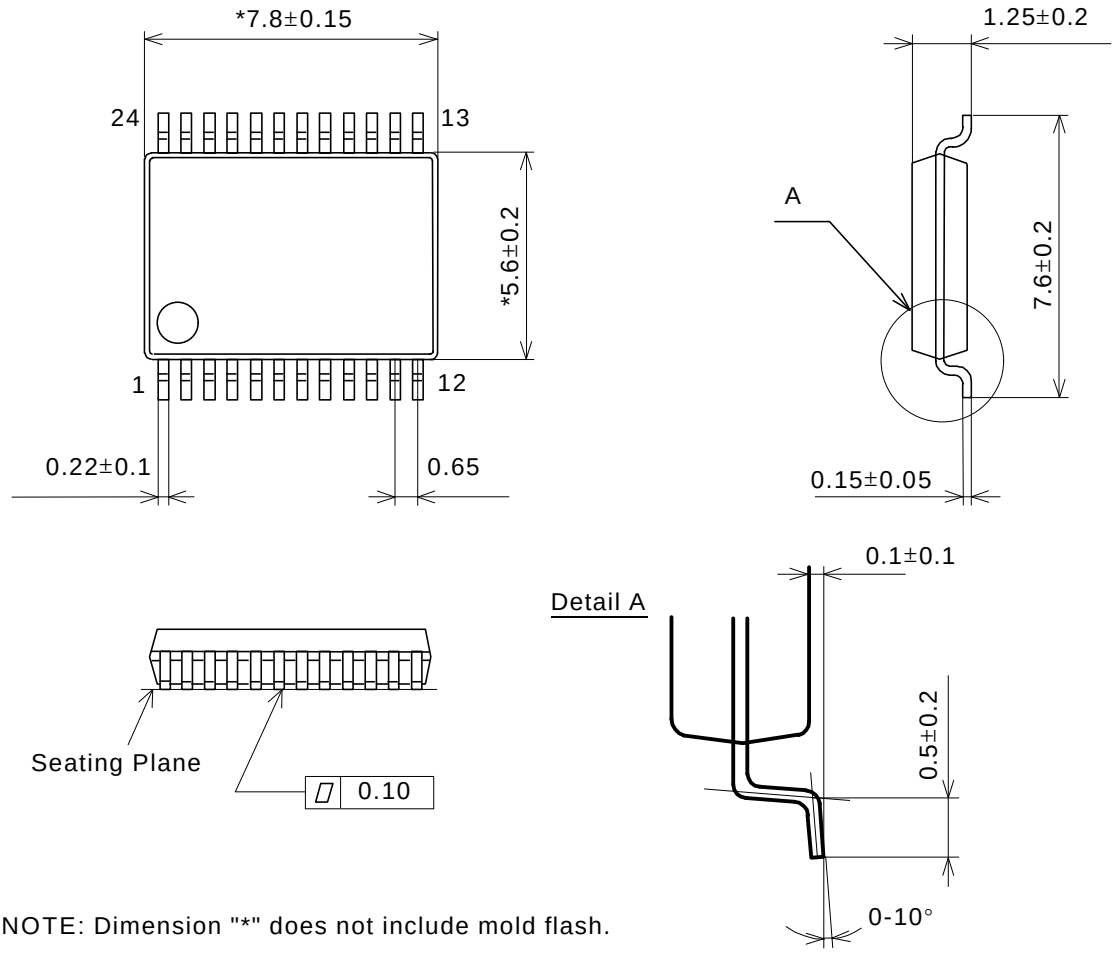

NOTE: Dimension "*" does not include mold flash.

■ Package & Lead frame material

Package molding compound:	Epoxy
Lead frame material:	Cu
Lead frame surface treatment:	Solder plate (Pb free)

MARKING

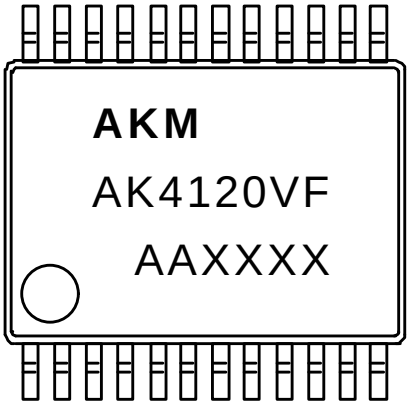

Contents of AAXXXX
AA: Lot#
XXXX: Date Code

IMPORTANT NOTICE

- These products and their specifications are subject to change without notice. Before considering any use or application, consult the Asahi Kasei Microsystems Co., Ltd. (AKM) sales office or authorized distributor concerning their current status.
- AKM assumes no liability for infringement of any patent, intellectual property, or other right in the application or use of any information contained herein.
- Any export of these products, or devices or systems containing them, may require an export license or other official approval under the law and regulations of the country of export pertaining to customs and tariffs, currency exchange, or strategic materials.
- AKM products are neither intended nor authorized for use as critical components in any safety, life support, or other hazard related device or system, and AKM assumes no responsibility relating to any such use, except with the express written consent of the Representative Director of AKM. As used here:
  (a) A hazard related device or system is one designed or intended for life support or maintenance of safety or for applications in medicine, aerospace, nuclear energy, or other fields, in which its failure to function or perform may reasonably be expected to result in loss of life or in significant injury or damage to person or property.
  (b) A critical component is one whose failure to function or perform may reasonably be expected to result, whether directly or indirectly, in the loss of the safety or effectiveness of the device or system containing it, and which must therefore meet very high standards of performance and reliability.
- It is the responsibility of the buyer or distributor of an AKM product who distributes, disposes of, or otherwise places the product with a third party to notify that party in advance of the above content and conditions, and the buyer or distributor agrees to assume any and all responsibility and liability for and hold AKM harmless from any and all claims arising from the use of said product in the absence of such notification.