AK4343

Stereo DAC with HP/RCV/SPK-AMP

GENERAL DESCRIPTION

The AK4343 is a stereo DAC with a built-in Headphone-Amplifier, Receiver-Amplifier and 1.2W output Speaker-Amplifier. The AK4343 features analog mixing circuits and PLL that allows easy interfacing in mobile phone and portable A/V player designs. The AK4343 is available in a 32pin QFN, utilizing less board space than competitive offerings.

FEATURES

1. Playback Function
- **Digital De-emphasis Filter (tc=50/15μs, fs=32kHz, 44.1kHz, 48kHz)**
- **Bass Boost**
- **Soft Mute**
- **Digital Volume (+12dB ~ –115.0dB, 0.5dB Step, Mute)**
- **Digital ALC (Automatic Level Control)**
  (+36dB ~ –54dB, 0.375dB Step, Mute)
- **Stereo Separation Emphasis**
- **Programmable EQ**
- **Stereo Line Output**
  - **Performance: S/(N+D): 88dB, S/N: 92dB**
- **Mono Receiver-Amp**
  - **BTL Output**
  - **Output Power: 30mW@32Ω (AVDD=3.3V)**
- **Stereo Headphone-Amp**
  - **S/(N+D): 70dB@7.5mW, S/N: 90dB**
  - **Output Power: 70mW@16Ω (HVDD=5V), 62mW@16Ω (HVDD=3.3V)**
  - **Pop Noise Free at Power ON/OFF**
- **Mono Speaker-Amp**
  - **S/(N+D): 50dB@240mW, S/N: 90dB**
  - **BTL Output**
  - **Availbable for both Dynamic and Piezo Speaker**
  - **Output Power: 1.2W@8Ω (HVDD=5V), 400mW@8Ω (HVDD=3.3V)**
    3.0Vrms@50Ω (HVDD=5V)
- **Analog Mixing:**
  - **3 Stereo Input**
  - **Gain Amplifier (+32dB/+26dB/+20dB or 0dB)**

2. Power Management

3. Master Clock:

(1) PLL Mode
- **Frequencies:**
  11.2896MHz, 12MHz, 12.288MHz, 13.5MHz, 24MHz, 27MHz (MCKI pin)
  1fs (LRCK pin)
  32fs or 64fs (BICK pin)

(2) External Clock Mode
- **Frequencies: 256fs, 512fs or 1024fs (MCKI pin)**

4. Output Master Clock Frequencies: 32fs/64fs/128fs/256fs

5. Sampling Rate:
- **PLL Slave Mode (LRCK pin): 7.35kHz ~ 48kHz**
- **PLL Slave Mode (BICK pin): 7.35kHz ~ 48kHz**
- **PLL Slave Mode (MCKI pin):**
  8kHz, 11.025kHz, 12kHz, 16kHz, 22.05kHz, 24kHz, 32kHz, 44.1kHz, 48kHz
- **PLL Master Mode:**
  8kHz, 11.025kHz, 12kHz, 16kHz, 22.05kHz, 24kHz, 32kHz, 44.1kHz, 48kHz

- **EXT Master/Slave Mode:**
  7.35kHz ~ 48kHz (256fs), 7.35kHz ~ 26kHz (512fs), 7.35kHz ~ 13kHz (1024fs)

6. μP I/F: 3-wire Serial, I^2C Bus (Ver 1.0, 400kHz High Speed Mode)
7. Master/Slave mode
8. Audio Interface Format: MSB First, 2's complement
- **16bit MSB justified, 16bit LSB justified, 16-24bit I^2S, DSP Mode**

9. Ta = –30 ~ 85°C (SPK-Amp=OFF)
–30 ~ 70°C (SPK-Amp=ON)
10. Power Supply:
- **AVDD, DVDD: 2.6 ~ 3.6V (typ. 3.3V)**
- **HVDD: 2.6 ~ 5.25V (typ. 3.3V/5.0V)**

11. Package: 32pin QFN (5mm x 5mm, 0.5mm pitch)
12. Pin/Register Compatible with AK4642EN

■ Block Diagram

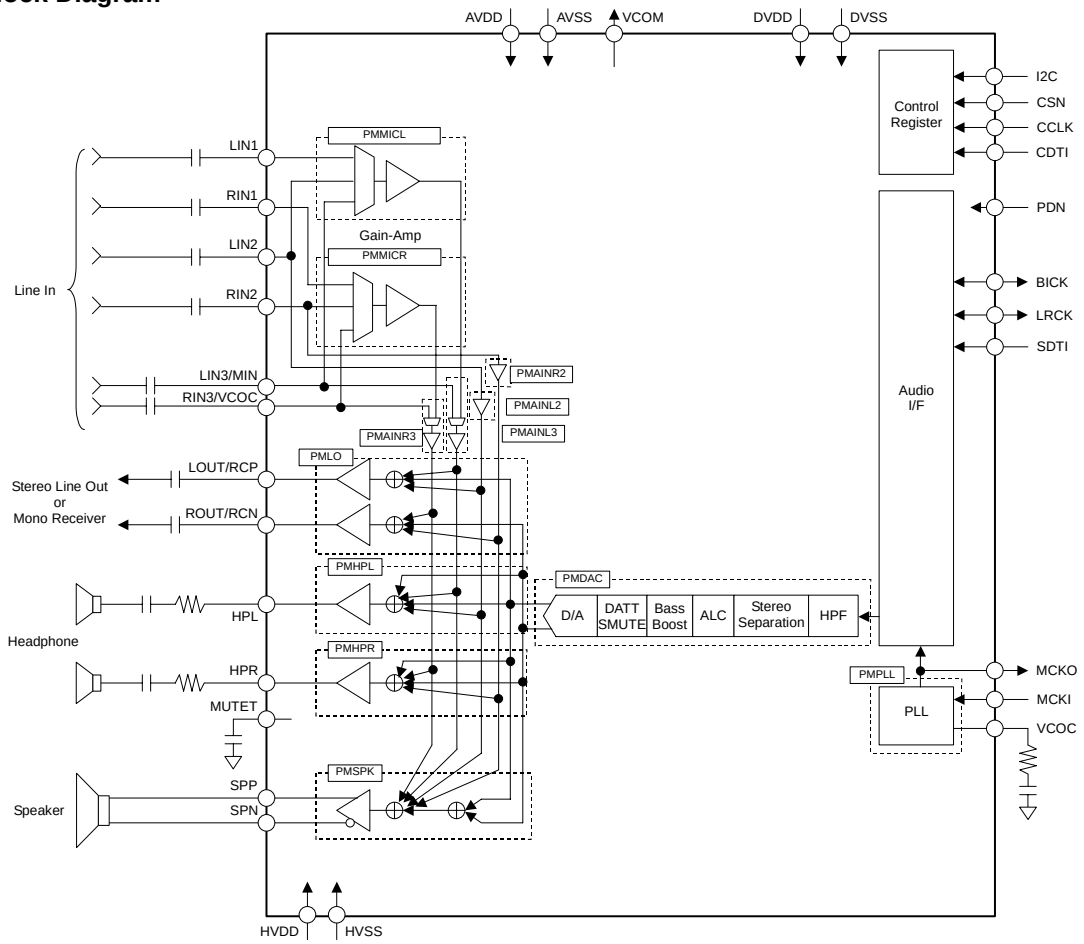

Figure 1. Block Diagram

■ Ordering Guide

AK4343EN	–30 ~ +85°C	32pin QFN (0.5mm pitch)
AKD4343	Evaluation board for AK4343	

■ Pin Layout

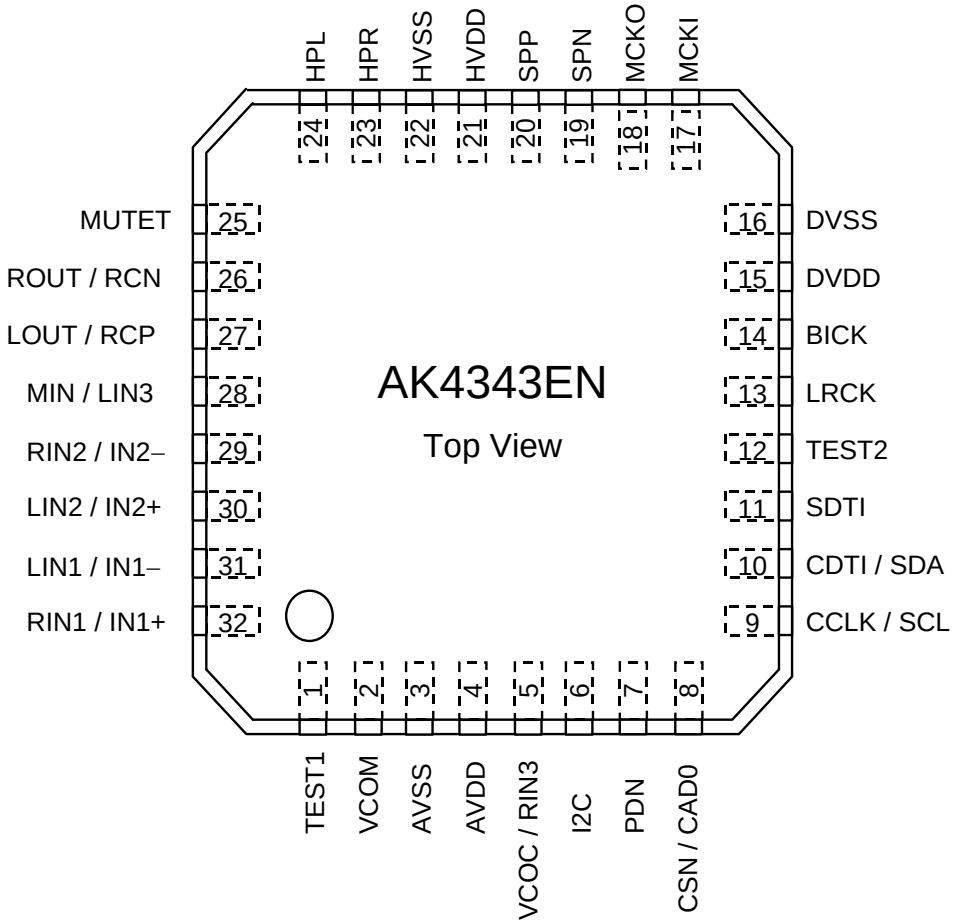

■ Compatibility with AK4642EN

1. Function

Function	AK4642EN	AK4343
SPK-Amp Max Output Power	400mW@3.3V	1.2W@5V
HP-Amp Max Output Power	62mW@3.3V	70mW@5V
Receiver-Amp	No	Yes
Analog Mixing for Playback	1 Mono	3 Stereo
ADC	Yes	No
ALC Recovery Waiting Period	128/fs ~ 1024/fs	128/fs ~ 16384/fs
ALC Fast Recovery Speed	4 times	4, 8 or 16 times
DSP Format	No	Yes
EXT Master Mode	No	Yes
DAC Group Delay	22/fs	25/fs

2. Pin

Pin#	AK4642EN	AK4343
1	MPWR	TEST1
5	VCOC	VCOC/RIN3
12	SDTO	TEST2
26	ROUT	ROUT/RCN
27	LOUT	LOUT/RCP
28	MIN	MIN/LIN3

3. Register

Addr	Register Name	D7	D6	D5	D4	D3	D2	D1	D0
00H	Power Management 1	0	PMVCM	PMMIN	PMSPK	PMLO	PMDAC	0	~~PMADL~~
01H	Power Management 2	0	HPMTN	PMHPL	PMHPR	M/S	0	MCKO	PMPLL
02H	Signal Select 1	SPPSN	MINS	DACS	DACL	0	~~PMMP~~	0	MGAIN0
03H	Signal Select 2	LOVL	LOPS	MGAIN1	SPKG1	SPKG0	MINL	0	0
04H	Mode Control 1	PLL3	PLL2	PLL1	PLL0	BCKO	0	DIF1	DIF0
05H	Mode Control 2	PS1	PS0	FS3	MSBS	BCKP	FS2	FS1	FS0
06H	Timer Select	DVTM	WTM2	ZTM1	ZTM0	WTM1	WTM0	RFST1	RFST0
07H	ALC Mode Control 1	0	0	ALC	ZELMN	LMAT1	LMAT0	RGAIN0	LMTH0
08H	ALC Mode Control 2	REF7	REF6	REF5	REF4	REF3	REF2	REF1	REF0
09H	Lch Input Volume Control	AVL7	AVL6	AVL5	AVL4	AVL3	AVL2	AVL1	AVL0
0AH	Lch Digital Volume Control	DVL7	DVL6	DVL5	DVL4	DVL3	DVL2	DVL1	DVL0
0BH	ALC Mode Control 3	RGAIN1	LMTH1	0	0	0	0	VBAT	0
0CH	Rch Input Volume Control	AVR7	AVR6	AVR5	AVR4	AVR3	AVR2	AVR1	AVR0
0DH	Rch Digital Volume Control	DVR7	DVR6	DVR5	DVR4	DVR3	DVR2	DVR1	DVR0
0EH	Mode Control 3	0	~~LOOP~~	SMUTE	DVOLC	BST1	BST0	DEM1	DEM0
0FH	Mode Control 4	0	0	0	0	AVOLC	HPM	MINH	DACH
10H	Power Management 3	INR1	INL1	HPG	MDIF2	MDIF1	INR0	INL0	~~PMADR~~
11H	Digital Filter Select	GN1	GN0	0	FIL1	EQ	FIL3	0	0
12H	FIL3 Co-efficient 0	F3A7	F3A6	F3A5	F3A4	F3A3	F3A2	F3A1	F3A0
13H	FIL3 Co-efficient 1	F3AS	0	F3A13	F3A12	F3A11	F3A10	F3A9	F3A8
14H	FIL3 Co-efficient 2	F3B7	F3B6	F3B5	F3B4	F3B3	F3B2	F3B1	F3B0
15H	FIL3 Co-efficient 3	0	0	F3B13	F3B12	F3B11	F3B10	F3B9	F3B8
16H	EQ Co-efficient 0	EQA7	EQA6	EQA5	EQA4	EQA3	EQA2	EQA1	EQA0
17H	EQ Co-efficient 1	EQA15	EQA14	EQA13	EQA12	EQA11	EQA10	EQA9	EQA8
18H	EQ Co-efficient 2	EQB7	EQB6	EQB5	EQB4	EQB3	EQB2	EQB1	EQB0
19H	EQ Co-efficient 3	0	0	EQB13	EQB12	EQB11	EQB10	EQB9	EQB8
1AH	EQ Co-efficient 4	EQC7	EQC6	EQC5	EQC4	EQC3	EQC2	EQC1	EQC0
1BH	EQ Co-efficient 5	EQC15	EQC14	EQC13	EQC12	EQC11	EQC10	EQC9	EQC8
1CH	FIL1 Co-efficient 0	F1A7	F1A6	F1A5	F1A4	F1A3	F1A2	F1A1	F1A0
1DH	FIL1 Co-efficient 1	F1AS	0	F1A13	F1A12	F1A11	F1A10	F1A9	F1A8
1EH	FIL1 Co-efficient 2	F1B7	F1B6	F1B5	F1B4	F1B3	F1B2	F1B1	F1B0
1FH	FIL1 Co-efficient 3	0	0	F1B13	F1B12	F1B11	F1B10	F1B9	F1B8
20H	Power Management 4	0	0	PMAINR3	PMAINL3	PMAINR2	PMAINL2	PMMICR	PMMICL
21H	Mode Control 5	0	0	MICR3	MICL3	0	0	AIN3	RCV
22H	Lineout Mixing Select	0	0	0	0	RINR3	LINL3	RINR2	LINL2
23H	HP Mixing Select	0	0	0	0	RINH3	LINH3	RINH2	LINH2
24H	SPK Mixing Select	0	0	0	0	RINS3	LINS3	RINS2	LINS2

These bits are added in the AK4343.
These bits are removed from the AK4343.

PIN/FUNCTION

No.	Pin Name	I/O	Function
1	TEST1	-	Test 1 Pin This pin should be left floating.
2	VCOM	O	Common Voltage Output Pin, 0.45 x AVDD Bias voltage of DAC outputs.
3	AVSS	-	Analog Ground Pin
4	AVDD	-	Analog Power Supply Pin
5	VCOC	O	Output Pin for Loop Filter of PLL Circuit (AIN3 bit = “0”: PLL is available) This pin should be connected to AVSS with one resistor and capacitor in series.
	RIN3	I	Rch Analog Input 3 Pin (AIN3 bit = “1”: PLL is not available)
6	I2C	I	Control Mode Select Pin “H”: I^2C Bus, “L”: 3-wire Serial
7	PDN	I	Power-Down Mode Pin “H”: Power-up, “L”: Power-down, reset and initializes the control register.
8	CSN	I	Chip Select Pin (I2C pin = “L”: 3-wire Serial Mode)
	CAD0	I	Chip Address 1 Select Pin (I2C pin = “H”: I^2C Bus Mode)
9	CCLK	I	Control Data Clock Pin (I2C pin = “L”: 3-wire Serial Mode)
	SCL	I	Control Data Clock Pin (I2C pin = “H”: I^2C Bus Mode)
10	CDTI	I	Control Data Input Pin (I2C pin = “L”: 3-wire Serial Mode)
	SDA	I/O	Control Data Input Pin (I2C pin = “H”: I^2C Bus Mode)
11	SDTI	I	Audio Serial Data Input Pin
12	TEST2	-	Test 2 Pin This pin should be left floating.
13	LRCK	I/O	Input / Output Channel Clock Pin
14	BICK	I/O	Audio Serial Data Clock Pin
15	DVDD	-	Digital Power Supply Pin
16	DVSS	-	Digital Ground Pin
17	MCKI	I	External Master Clock Input Pin
18	MCKO	O	Master Clock Output Pin
19	SPN	O	Speaker Amp Negative Output Pin
20	SPP	O	Speaker Amp Positive Output Pin
21	HVDD	-	Headphone & Speaker Amp Power Supply Pin
22	HVSS	-	Headphone & Speaker Amp Ground Pin
23	HPR	O	Rch Headphone-Amp Output Pin
24	HPL	O	Lch Headphone-Amp Output Pin
25	MUTET	O	Mute Time Constant Control Pin Connected to HVSS pin with a capacitor for mute time constant.
26	ROUT	O	Rch Stereo Line Output Pin (RCV bit = “0”: Single-ended Stereo Output)
	RCN	O	Receiver-Amp Negative Output Pin (RCV bit = “1”: BTL output)
27	LOUT	O	Lch Stereo Line Output Pin (RCV bit = “0”: Single-ended Stereo Output)
	RCP	O	Receiver-Amp Positive Output Pin (RCV bit = “1”: BTL output)
28	MIN	I	Mono Signal Input Pin (AIN3 bit = “0”: PLL is available)
	LIN3	I	Lch Analog Input 3 Pin (AIN3 bit = “1”: PLL is not available)
29	RIN2	I	Rch Analog Input 2 Pin (MDIF2 bit = “0”: Single-ended Input)
	IN2–	I	Rch Negative Input 2 Pin (MDIF2 bit = “1”: Full-differential Input)
30	LIN2	I	Lch Analog Input 2 Pin (MDIF2 bit = “0”: Single-ended Input)
	IN2+	I	Rch Positive Input 2 Pin (MDIF2 bit = “1”: Full-differential Input)
31	LIN1	I	Lch Analog Input 1 Pin (MDIF1 bit = “0”: Single-ended Input)
	IN1–	I	Lch Negative Input 1 Pin (MDIF1 bit = “1”: Full-differential Input)
32	RIN1	I	Rch Analog Input 1 Pin (MDIF1 bit = “0”: Single-ended Input)
	IN1+	I	Lch Positive Input 1 Pin (MDIF1 bit = “1”: Full-differential Input)

Note 1. All input pins except analog input pins (MIN/LIN3, LIN1, RIN1, LIN2, RIN2, RIN3) should not be left floating.
Note 2. AVDD or AVSS voltage should be input to I2C pin.

■ Handling of Unused Pin

The unused I/O pins should be processed appropriately as below.

Classification	Pin Name	Setting
Analog	VCOC/RIN3, SPN, SPP, HPR, HPL, MUTET, ROUT/RCN, LOUT/RCP, MIN/LIN3, RIN2/IN2–, LIN2/IN2+, LIN1/IN1–, RIN1/IN1+	These pins should be open.
Digital	MCKO	This pin should be open.
	MCKI	This pin should be connected to DVSS.

ABSOLUTE MAXIMUM RATINGS

(AVSS, DVSS, HVSS=0V; Note 3)

Parameter		Symbol	min	max	Units
Power Supplies:	Analog	AVDD	–0.3	6.0	V
	Digital	DVDD	–0.3	6.0	V
	Headphone-Amp / Speaker-Amp	HVDD	–0.3	6.0	V
	|AVSS – DVSS| (Note 4)	ΔGND1	-	0.3	V
	|AVSS – HVSS| (Note 4)	ΔGND2	-	0.3	V
Input Current, Any Pin Except Supplies		IIN	-	±10	mA
Analog Input Voltage (Note 5)		VINA	–0.3	AVDD+0.3	V
Digital Input Voltage (Note 6)		VIND	–0.3	DVDD+0.3	V
Ambient Temperature (powered applied)		Ta	–30	85	°C
Storage Temperature		Tstg	–65	150	°C
Maximum Power Dissipation (Note 7)	Ta=85°C (Note 8)	Pd1	-	750	mW
	Ta=70°C (Note 9)	Pd2	-	1000	mW

Note 3. All voltages with respect to ground.
Note 4. AVSS, DVSS and HVSS must be connected to the same analog ground plane.
Note 5. I2C, MIN/LIN3, RIN3, RIN2/IN2–, LIN2/IN2+, LIN1/IN1–, RIN1/IN1+ pins
Note 6. PDN, CSN/CAD0, CCLK/SCL, CDTI/SDA, SDTI, LRCK, BICK, MCKI pins
Pull-up resistors at SDA and SCL pins should be connected to (DVDD+0.3)V or less voltage.
Note 7. In case that the exposed pad is connected to the ground and PCB wiring density is 100%. If the exposed pad is open, Pd1=400mW(max: Speaker-Amp is not available.) and Pd2=550mW(max: Speaker-Amp is available at HVDD=2.6~3.6V.). This power is the AK4343 internal dissipation that does not include power of externally connected speaker and headphone.
Note 8. Speaker-Amp is available at HVDD=2.6~3.6V.
Note 9. Speaker-Amp is available at HVDD=2.6~5.25V.

WARNING: Operation at or beyond these limits may result in permanent damage to the device.
Normal operation is not guaranteed at these extremes.

RECOMMENDED OPERATING CONDITIONS

(AVSS, DVSS, HVSS=0V; Note 3)

Parameter		Symbol	min	typ	max	Units
Power Supplies (Note 10)	Analog	AVDD	2.6	3.3	3.6	V
	Digital	DVDD	2.6	3.3	3.6	V
	HP / SPK-Amp	HVDD	2.6	3.3 / 5.0	5.25	V
	Difference	AVDD–DVDD	–0.3	0	+0.3	V

Note 3. All voltages with respect to ground.

Note 10. The power-up sequence between AVDD, DVDD and HVDD is not critical. When only AVDD or HVDD is powered OFF, the power supply current of DVDD at power-down mode may be increased. DVDD should not be powered OFF while AVDD or HVDD is powered ON.

* AKM assumes no responsibility for the usage beyond the conditions in this datasheet.

ANALOG CHARACTERISTICS

(Ta=25°C; AVDD, DVDD, HVDD=3.3V; AVSS=DVSS=HVSS=0V; fs=44.1kHz, BICK=64fs; Signal Frequency=1kHz; 16bit Data; Measurement frequency=20Hz ~ 20kHz; unless otherwise specified)

Parameter		min	typ	max	Units
Gain Amplifier: LIN1/RIN1/LIN2/RIN2 pins & LIN3/RIN3 pins (AIN3 bit = “1”); MDIF1=MDIF2 bits = “0” (Single-ended inputs)					
Input Resistance	MGAIN1-0 bits = “00”	40	60	80	kΩ
	MGAIN1-0 bits = “01”, “10”or “11”	20	30	40	kΩ
Gain	MGAIN1-0 bits = “00”	-	0	-	dB
	MGAIN1-0 bits = “01”	-	+20	-	dB
	MGAIN1-0 bits = “10”	-	+26	-	dB
	MGAIN1-0 bits = “11”	-	+32	-	dB
Gain Amplifier: IN1+/IN1–/IN2+/IN2– pins; MDIF1 = MDIF2 bits = “1” (Full-differential input)					
Maximum Input Voltage (Note 11)					
	MGAIN1-0 bits = “01”	-	-	0.228	Vpp
	MGAIN1-0 bits = “10”	-	-	0.114	Vpp
	MGAIN1-0 bits = “11”	-	-	0.057	Vpp

Note 11. The voltage difference between IN1/2+ and IN1/2– pins. AC coupling capacitor should be inserted in series at each input pin. Full-differential mic input is not available at MGAIN1-0 bits = “00”. Maximum input voltage of IN1+, IN1–, IN2+ and IN2– pins is proportional to AVDD voltage, respectively.
Vin = 0.069 x AVDD (max)@MGAIN1-0 bits = “01”, 0.035 x AVDD (max)@MGAIN1-0 bits = “10”, 0.017 x AVDD (max)@MGAIN1-0 bits = “11”.
When the signal larger than above value is input to IN1+, IN1–, IN2+ or IN2– pin, Gain Amp does not operate normally.

Parameter		min	typ	max	Units
DAC Characteristics:					
Resolution		-	-	16	Bits
Stereo Line Output Characteristics: DAC → LOUT/ROUT pins, ALC=OFF, AVOL=0dB, DVOL=0dB, LOVL bit = "0", RCV bit = "0", R_L=10kΩ; unless otherwise specified.					
Output Voltage (Note 12)	LOVL bit = "0"	1.78	1.98	2.18	Vpp
	LOVL bit = "1"	2.25	2.50	2.75	Vpp
S/(N+D) (–3dBFS)		78	88	-	dBFS
S/N (A-weighted)		82	92	-	dB
Interchannel Isolation					
	PMAINL2/R2/L3/R3 bits = "1"	80	100	-	dB
	PMAINL2/R2/L3/R3 bits = "0"	-	100	-	dB
Interchannel Gain Mismatch		-	0.1	0.5	dB
Load Resistance		10	-	-	kΩ
Load Capacitance		-	-	30	pF
Mono Receiver Output Characteristics: DAC → RCP/RCN pins, ALC=OFF, AVOL=0dB, DVOL=0dB, LOVL bit = "0", RCV bit = "1", R_L=32Ω, BTL; unless otherwise specified.					
Output Voltage (Note 13)					
LOVL bit = "0", –6dBFS, R_L=32Ω (Po=15mW)		1.57	1.96	2.35	Vpp
LOVL bit = "0", –3dBFS, R_L=32Ω (Po=30mW)		-	2.77	-	Vpp
LOVL bit = "1", –8dBFS, R_L=32Ω (Po=15mW)		1.57	1.96	2.35	Vpp
LOVL bit = "1", –5dBFS, R_L=32Ω (Po=30mW)		-	2.77	-	Vpp
S/(N+D)					
LOVL bit = "0", –6dBFS, R_L=32Ω (Po=15mW)		40	60	-	dB
LOVL bit = "0", –3dBFS, R_L=32Ω (Po=30mW)		-	60	-	dB
S/N (A-weighted)		85	95	-	dBFS
Load Resistance		32	-	-	Ω
Load Capacitance		-	-	30	pF

Note 12. Output voltage is proportional to AVDD voltage. Vout = 0.6 x AVDD (typ)@LOVL bit = "0".
Note 13. Output voltage is proportional to AVDD voltage. Vout = (RCP) – (RCN) = 0.59 x AVDD (typ)@LOVL bit = "0", –6dBFS.

Parameter		min	typ	max	Units
Headphone-Amp Characteristics: DAC → HPL/HPR pins, ALC=OFF, AVOL=0dB, DVOL=0dB; unless otherwise specified.					
Output Voltage (Note 14)					
HPG bit = “0”, 0dBFS, HVDD=3.3V, R_L=22.8Ω		1.58	1.98	2.38	Vpp
HPG bit = “1”, 0dBFS, HVDD=5V, R_L=100Ω		2.40	3.00	3.60	Vpp
HPG bit = “1”, 0dBFS, HVDD=3.3V, R_L=16Ω (Po=62mW)		-	1.0	-	Vrms
HPG bit = “1”, 0dBFS, HVDD=5V, R_L=16Ω (Po=70mW)		-	1.06	-	Vrms
S/(N+D)					
HPG bit = “0”, –3dBFS, HVDD=3.3V, R_L=22.8Ω		60	70	-	dBFS
HPG bit = “1”, –3dBFS, HVDD=5V, R_L=100Ω		-	80	-	dBFS
HPG bit = “1”, 0dBFS, HVDD=3.3V, R_L=16Ω (Po=62mW)		-	20	-	dBFS
HPG bit = “1”, 0dBFS, HVDD=5V, R_L=16Ω (Po=70mW)		-	70	-	dBFS
S/N (A-weighted)	(Note 15)	80	90	-	dB
	(Note 16)	-	90	-	dB
Interchannel Isolation					
(Note 15), PMAINL2/R2/L3/R3 bits = “1”		65	75	-	dB
(Note 15), PMAINL2/R2/L3/R3 bits = “0”		-	75	-	dB
(Note 16)		-	80	-	dB
Interchannel Gain Mismatch	(Note 15)	-	0.1	0.8	dB
	(Note 16)	-	0.1	0.8	dB
Load Resistance		16	-	-	Ω
Load Capacitance	C1 in Figure 2	-	-	30	pF
	C2 in Figure 2	-	-	300	pF

Note 14. Output voltage is proportional to AVDD voltage.
Vout = 0.6 x AVDD(typ)@HPG bit = “0”, 0.91 x AVDD(typ)@HPG bit = “1”.
Note 15. HPG bit = “0”, HVDD=3.3V, R_L=22.8Ω.
Note 16. HPG bit = “1”, HVDD=5V, R_L=100Ω.

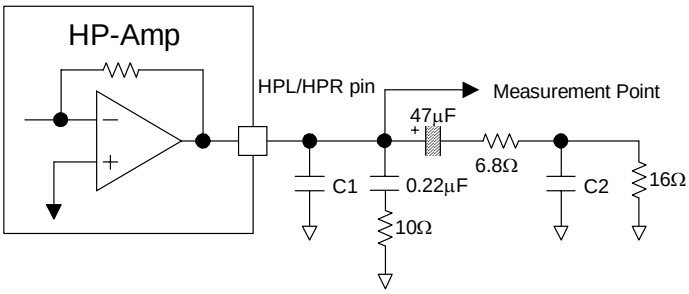

Figure 2. Headphone-Amp output circuit

Parameter	min	typ	max	Units
Speaker-Amp Characteristics: DAC → SPP/SPN pins, ALC=OFF, AVOL=0dB, DVOL=0dB, R_L=8Ω, BTL, HVDD=3.3V; unless otherwise specified.				
Output Voltage (Note 17)				
SPKG1-0 bits = "00", –0.5dBFS (Po=150mW)	-	3.11	-	Vpp
SPKG1-0 bits = "01", –0.5dBFS (Po=240mW)	3.13	3.92	4.71	Vpp
HVDD=5V, SPKG1-0 bits = "11", 0dBFS (Po=1W)	3.13	3.92	4.71	Vpp
Line Input → SPP/SPN pins, HVDD=5V, SPKG1-0 bits = "11", –1.5dBV Input (Po=1.2W)	-	2.83	-	Vrms
S/(N+D)				
SPKG1-0 bits = "00", –0.5dBFS (Po=150mW)	-	60	-	dB
SPKG1-0 bits = "01", –0.5dBFS (Po=240mW)	20	50	-	dB
HVDD=5V, SPKG1-0 bits = "11", 0dBFS (Po=1W)	20	30	-	dB
Line Input → SPP/SPN pins, HVDD=5V, SPKG1-0 bits = "11", –1.5dBV Input (Po=1.2W)	-	20	-	dB
S/N (A-weighted)	80	90	-	dB
Load Resistance	8	-	-	Ω
Load Capacitance	-	-	30	pF
Speaker-Amp Characteristics: DAC → SPP/SPN pins, ALC=OFF, AVOL=0dB, DVOL=0dB, C_L=3μF, R_{series}=10Ω x 2, BTL, HVDD=5.0V; unless otherwise specified.				
Output Voltage (Note 17) SPKG1-0 bits = "10", 0dBFS	-	6.75	-	Vpp
Output Voltage (Note 17) SPKG1-0 bits = "11", 0dBFS	6.80	8.50	10.20	Vpp
S/(N+D) (Note 18) SPKG1-0 bits = "10", 0dBFS	-	60	-	dB
S/(N+D) (Note 18) SPKG1-0 bits = "11", 0dBFS	40	50	-	dB
S/N (A-weighted)	80	90	-	dB
Load Resistance (Note 19)	50	-	-	Ω
Load Capacitance (Note 19)	-	-	3	μF
Mono Input: MIN pin (AIN3 bit = "0"; External Input Resistance=20kΩ)				
Maximum Input Voltage (Note 20)	-	1.98	-	Vpp
Gain (Note 21)				
MIN → LOUT/ROUT, LOVL bit = "0"	–4.5	0	+4.5	dB
MIN → LOUT/ROUT, LOVL bit = "1"	-	+2	-	dB
MIN → HPL/HPR, HPG bit = "0"	–24.5	–20	–15.5	dB
MIN → HPL/HPR, HPG bit = "1"	-	–16.4	-	dB
MIN → SPP/SPN				
ALC bit = "0", SPKG1-0 bits = "00"	–0.07	+4.43	+8.93	dB
ALC bit = "0", SPKG1-0 bits = "01"	-	+6.43	-	dB
ALC bit = "0", SPKG1-0 bits = "10"	-	+10.65	-	dB
ALC bit = "0", SPKG1-0 bits = "11"	-	+12.65	-	dB
ALC bit = "1", SPKG1-0 bits = "00"	-	+6.43	-	dB
ALC bit = "1", SPKG1-0 bits = "01"	-	+8.43	-	dB
ALC bit = "1", SPKG1-0 bits = "10"	-	+12.65	-	dB
ALC bit = "1", SPKG1-0 bits = "11"	-	+14.65	-	dB

Note 17. Output voltage is proportional to AVDD voltage.
Vout = 0.94 x AVDD(typ)@SPKG1-0 bits = "00", 1.19 x AVDD(typ)@SPKG1-0 bits = "01", 2.05 x AVDD(typ)@SPKG1-0 bits = "10", 2.58 x AVDD(typ)@SPKG1-0 bits = "11" at Full-differential output.

Note 18. In case of measuring at SPP and SPN pins.

Note 19. Load impedance is total impedance of series resistance (R_{series}) and piezo speaker impedance at 1kHz in Figure 58. Load capacitance is capacitance of piezo speaker. When piezo speaker is used, 10Ω or more series resistors should be connected at both SPP and SPN pins, respectively.

Note 20. Maximum voltage is in proportion to both AVDD and external input resistance (Rin). Vin = 0.6 x AVDD x Rin / 20kΩ (typ).

Note 21. The gain is in inverse proportion to external input resistance.

Parameter			min	typ	max	Units
Stereo Input: LIN2/RIN2 pins; LIN3/RIN3 pins (AIN3 bit = “1”)						
Maximum Input Voltage (Note 22)			-	1.98	-	Vpp
Gain						
LIN/RIN → LOUT/ROUT		LOVL bit = “0”	–4.5	0	+4.5	dB
		LOVL bit = “1”	-	+2	-	dB
LIN/RIN → HPL/HPR		HPG bit = “0”	–4.5	0	+4.5	dB
		HPG bit = “1”	-	+3.6	-	dB
LIN/RIN → SPP/SPN						
	ALC bit = “0”, SPKG1-0 bits = “00”		–6.09	–1.59	+2.91	dB
	ALC bit = “0”, SPKG1-0 bits = “01”		-	+0.41	-	dB
	ALC bit = “0”, SPKG1-0 bits = “10”		-	+4.63	-	dB
	ALC bit = “0”, SPKG1-0 bits = “11”		-	+6.63	-	dB
	ALC bit = “1”, SPKG1-0 bits = “00”		-	+0.41	-	dB
	ALC bit = “1”, SPKG1-0 bits = “01”		-	+2.41	-	dB
	ALC bit = “1”, SPKG1-0 bits = “10”		-	+6.63	-	dB
	ALC bit = “1”, SPKG1-0 bits = “11”		-	+8.63	-	dB
Power Supplies:						
Power-Up (PDN pin = “H”)						
All Circuit Power-up:						
	AVDD+DVDD (Note 23)		-	12	18	mA
	HVDD: HP-Amp Normal Operation No Output (Note 24)		-	5	8	mA
	HVDD: SPK-Amp Normal Operation No Output (Note 25)		-	11	30	mA
Power-Down (PDN pin = “L”) (Note 26)						
AVDD+DVDD+HVDD			-	10	100	μA

Note 22. Output voltage is proportional to AVDD voltage. Vout = 0.6 x AVDD (typ).
Note 23. PLL Master Mode (MCKI=12.288MHz) and PMDAC = PMLO = PMHPL = PMHPR = PMVCM = PMPLL = MCKO = PMMIN = M/S = PMMICL = PMMICR bits = “1”.
AVDD=9mA(typ), DVDD=3mA(typ).
EXT Slave Mode (PMPLL = M/S = MCKO bits = “0”): AVDD=6mA(typ), DVDD=2mA(typ).
Note 24. PMDAC = PMLO = PMHPL = PMHPR = PMVCM = PMPLL = PMMIN bits = “1” and PMSPK bit = “0”.
Note 25. PMDAC = PMLO = PMSPK = PMVCM = PMPLL = PMMIN bits = “1” and PMHPL = PMHPR bits = “0”.
Note 26. All digital input pins are fixed to DVDD or DVSS.

■ Power Consumption for each operation mode

Condtions: Ta=25°C; AVDD=DVDD=HVDD=3.3V; AVSS=DVSS=HVSS=0V; fs=44.1kHz, External Slave Mode, BICK=64fs; 1kHz, 0dBFS input; Headphone & Speaker = No output

Mode	Power Management Bit													AVDD [mA]	DVDD [mA]	HVDD [mA]	Total Power [mW]
	00H					01H		20H									
	PMVCM	PMMIN	PMSPK	PMLO	PMDAC	PMHPL	PMHPR	PMMICL	PMMICR	PMAINL2	PMAINR2	PMAINL3	PMAINR3				
All Power-down	0	0	0	0	0	0	0	0	0	0	0	0	0	0	0	0	0
DAC → Lineout	1	0	0	1	1	0	0	0	0	0	0	0	0	5.4	1.8	0.2	24.4
DAC → HP	1	0	0	0	1	1	1	0	0	0	0	0	0	3.7	1.8	5	34.7
DAC → SPK	1	0	1	0	1	0	0	0	0	0	0	0	0	3.7	1.8	11	54.5
LIN2/RIN2 → HP	1	0	0	0	0	1	1	0	0	1	1	0	0	1.9	0	5	22.8
LIN2/RIN2 → SPK	1	0	1	0	0	0	0	0	0	1	1	0	0	1.9	0	11	42.6
MIN → RCV	1	1	0	1	0	0	0	0	0	0	0	0	0	3.1	0	0.2	10.9

Table 1. Power Consumption for each operation mode (typ)

FILTER CHARACTERISTICS

(Ta=25°C; AVDD, DVDD=2.6 ~ 3.6V; HVDD=2.6 ~ 5.25V; fs=44.1kHz; DEM=OFF; FIL1=FIL3=EQ=OFF)

Parameter			Symbol	min	typ	max	Units
DAC Digital Filter (LPF):							
Passband (Note 27)		±0.1dB	PB	0	-	19.6	kHz
		–0.7dB		-	20.0	-	kHz
		–6.0dB		-	22.05	-	kHz
Stopband			SB	25.2	-	-	kHz
Passband Ripple			PR	-	-	±0.01	dB
Stopband Attenuation			SA	59	-	-	dB
Group Delay (Note 28)			GD	-	25	-	1/fs
DAC Digital Filter (LPF) + SCF:							
Frequency Response: 0 ~ 20.0kHz			FR	-	±1.0	-	dB
DAC Digital Filter (HPF):							
Frequency Response (Note 27)		–3.0dB	FR	-	0.9	-	Hz
		–0.5dB		-	2.7	-	Hz
		–0.1dB		-	6.0	-	Hz
BOOST Filter: (Note 29)							
Frequency Response	MIN	20Hz	FR	-	5.76	-	dB
		100Hz		-	2.92	-	dB
		1kHz		-	0.02	-	dB
	MID	20Hz	FR	-	10.80	-	dB
		100Hz		-	6.84	-	dB
		1kHz		-	0.13	-	dB
	MAX	20Hz	FR	-	16.06	-	dB
		100Hz		-	10.54	-	dB
		1kHz		-	0.37	-	dB

Note 27. The passband and stopband frequencies scale with fs (system sampling rate).
For example, PB=0.454*fs (@–0.7dB). Each response refers to that of 1kHz.

Note 28. The calculated delay time caused by digital filtering. This time is from setting the 16-bit data of both channels from the input register to the output of analog signal.

Note 29. These frequency responses scale with fs. If a high-level and low frequency signal is input, the analog output clips to the full-scale.

DC CHARACTERISTICS

(Ta=25°C; AVDD, DVDD=2.6 ~ 3.6V; HVDD=2.6 ~ 5.25V)

Parameter	Symbol	min	typ	max	Units
High-Level Input Voltage	VIH	70%DVDD	-	-	V
Low-Level Input Voltage	VIL	-	-	30%DVDD	V
High-Level Output Voltage (Iout=–200μA)	VOH	DVDD–0.2	-	-	V
Low-Level Output Voltage					
(Except SDA pin: Iout=200μA)	VOL	-	-	0.2	V
(SDA pin: Iout=3mA)	VOL	-	-	0.4	V
Input Leakage Current	Iin	-	-	±10	μA

SWITCHING CHARACTERISTICS

(Ta=25°C; AVDD, DVDD=2.6 ~ 3.6V; HVDD=2.6 ~ 5.25V; C_L=20pF; unless otherwise specified)

Parameter	Symbol	min	typ	max	Units
PLL Master Mode (PLL Reference Clock = MCKI pin)					
MCKI Input Timing					
Frequency	fCLK	11.2896	-	27	MHz
Pulse Width Low	tCLKL	0.4/fCLK	-	-	ns
Pulse Width High	tCLKH	0.4/fCLK	-	-	ns
MCKO Output Timing					
Frequency	fMCK	0.2352	-	12.288	MHz
Duty Cycle					
Except 256fs at fs=32kHz, 29.4kHz	dMCK	40	50	60	%
256fs at fs=32kHz, 29.4kHz	dMCK	-	33	-	%
LRCK Output Timing					
Frequency	fs	7.35	-	48	kHz
DSP Mode: Pulse Width High	tLRCKH	-	tBCK	-	ns
Except DSP Mode: Duty Cycle	Duty	-	50	-	%
BICK Output Timing					
Period BCKO bit = “0”	tBCK	-	1/(32fs)	-	ns
Period BCKO bit = “1”	tBCK	-	1/(64fs)	-	ns
Duty Cycle	dBCK	-	50	-	%
PLL Slave Mode (PLL Reference Clock = MCKI pin)					
MCKI Input Timing					
Frequency	fCLK	11.2896	-	27	MHz
Pulse Width Low	tCLKL	0.4/fCLK	-	-	ns
Pulse Width High	tCLKH	0.4/fCLK	-	-	ns
MCKO Output Timing					
Frequency	fMCK	0.2352	-	12.288	MHz
Duty Cycle					
Except 256fs at fs=32kHz, 29.4kHz	dMCK	40	50	60	%
256fs at fs=32kHz, 29.4kHz	dMCK	-	33	-	%
LRCK Input Timing					
Frequency	fs	7.35	-	48	kHz
DSP Mode: Pulse Width High	tLRCKH	tBCK–60	-	1/fs – tBCK	ns
Except DSP Mode: Duty Cycle	Duty	45	-	55	%
BICK Input Timing					
Period	tBCK	1/(64fs)	-	1/(32fs)	ns
Pulse Width Low	tBCKL	0.4 x tBCK	-	-	ns
Pulse Width High	tBCKH	0.4 x tBCK	-	-	ns

Parameter		Symbol	min	typ	max	Units
PLL Slave Mode (PLL Reference Clock = LRCK pin)						
LRCK Input Timing						
Frequency		fs	7.35	-	48	kHz
DSP Mode: Pulse Width High		tLRCKH	tBCK–60	-	1/fs – tBCK	ns
Except DSP Mode: Duty Cycle		Duty	45	-	55	%
BICK Input Timing						
Period		tBCK	1/(64fs)	-	1/(32fs)	ns
Pulse Width Low		tBCKL	130	-	-	ns
Pulse Width High		tBCKH	130	-	-	ns
PLL Slave Mode (PLL Reference Clock = BICK pin)						
LRCK Input Timing						
Frequency		fs	7.35	-	48	kHz
DSP Mode: Pulse Width High		tLRCKH	tBCK–60	-	1/fs – tBCK	ns
Except DSP Mode: Duty Cycle		Duty	45	-	55	%
BICK Input Timing						
Period	PLL3-0 bits = “0010”	tBCK	-	1/(32fs)	-	ns
	PLL3-0 bits = “0011”	tBCK	-	1/(64fs)	-	ns
Pulse Width Low		tBCKL	0.4 x tBCK	-	-	ns
Pulse Width High		tBCKH	0.4 x tBCK	-	-	ns
External Slave Mode						
MCKI Input Timing						
Frequency	256fs	fCLK	1.8816	-	12.288	MHz
	512fs	fCLK	3.7632	-	13.312	MHz
	1024fs	fCLK	7.5264	-	13.312	MHz
Pulse Width Low		tCLKL	0.4/fCLK	-	-	ns
Pulse Width High		tCLKH	0.4/fCLK	-	-	ns
LRCK Input Timing						
Frequency	256fs	fs	7.35	-	48	kHz
	512fs	fs	7.35	-	26	kHz
	1024fs	fs	7.35	-	13	kHz
DSP Mode: Pulse Width High		tLRCKH	tBCK–60	-	1/fs – tBCK	ns
Except DSP Mode: Duty Cycle		Duty	45	-	55	%
BICK Input Timing						
Period		tBCK	312.5	-	-	ns
Pulse Width Low		tBCKL	130	-	-	ns
Pulse Width High		tBCKH	130	-	-	ns
External Master Mode						
MCKI Input Timing						
Frequency	256fs	fCLK	1.8816	-	12.288	MHz
	512fs	fCLK	3.7632	-	13.312	MHz
	1024fs	fCLK	7.5264	-	13.312	MHz
Pulse Width Low		tCLKL	0.4/fCLK	-	-	ns
Pulse Width High		tCLKH	0.4/fCLK	-	-	ns
LRCK Output Timing						
Frequency		fs	7.35	-	48	kHz
DSP Mode: Pulse Width High		tLRCKH	-	tBCK	-	ns
Except DSP Mode: Duty Cycle		Duty	-	50	-	%
BICK Output Timing						
Period	BCKO bit = “0”	tBCK	-	1/(32fs)	-	ns
	BCKO bit = “1”	tBCK	-	1/(64fs)	-	ns
Duty Cycle		dBCK	-	50	-	%

Parameter	Symbol	min	typ	max	Units
Audio Interface Timing (DSP Mode)					
Master Mode					
LRCK "↑" to BICK "↑" (Note 30)	tDBF	0.5 x tBCK – 40	0.5 x tBCK	0.5 x tBCK + 40	ns
LRCK "↑" to BICK "↓" (Note 31)	tDBF	0.5 x tBCK – 40	0.5 x tBCK	0.5 x tBCK + 40	ns
SDTI Hold Time	tSDH	50	-	-	ns
SDTI Setup Time	tSDS	50	-	-	ns
Slave Mode					
LRCK "↑" to BICK "↑" (Note 30)	tLRB	0.4 x tBCK	-	-	ns
LRCK "↑" to BICK "↓" (Note 31)	tLRB	0.4 x tBCK	-	-	ns
BICK "↑" to LRCK "↑" (Note 30)	tBLR	0.4 x tBCK	-	-	ns
BICK "↓" to LRCK "↑" (Note 31)	tBLR	0.4 x tBCK	-	-	ns
SDTI Hold Time	tSDH	50	-	-	ns
SDTI Setup Time	tSDS	50	-	-	ns
Audio Interface Timing (Right/Left justified & I^2S)					
Master Mode					
BICK "↓" to LRCK Edge (Note 30)	tMBLR	–40	-	40	ns
SDTI Hold Time	tSDH	50	-	-	ns
SDTI Setup Time	tSDS	50	-	-	ns
Slave Mode					
LRCK Edge to BICK "↑" (Note 31)	tLRB	50	-	-	ns
BICK "↑" to LRCK Edge (Note 32)	tBLR	50	-	-	ns
SDTI Hold Time	tSDH	50	-	-	ns
SDTI Setup Time	tSDS	50	-	-	ns

Note 30. MSBS, BCKP bits = "00" or "11".
Note 31. MSBS, BCKP bits = "01" or "10".
Note 32. BICK rising edge must not occur at the same time as LRCK edge.

Parameter	Symbol	min	typ	max	Units
Control Interface Timing (3-wire Serial mode)					
CCLK Period	tCCK	200	-	-	ns
CCLK Pulse Width Low	tCCKL	80	-	-	ns
Pulse Width High	tCCKH	80	-	-	ns
CDTI Setup Time	tCDS	40	-	-	ns
CDTI Hold Time	tCDH	40	-	-	ns
CSN "H" Time	tCSW	150	-	-	ns
CSN "↓" to CCLK "↑"	tCSS	50	-	-	ns
CCLK "↑" to CSN "↑"	tCSH	50	-	-	ns
Control Interface Timing (I^2C Bus mode):					
SCL Clock Frequency	fSCL	-	-	400	kHz
Bus Free Time Between Transmissions	tBUF	1.3	-	-	µs
Start Condition Hold Time (prior to first clock pulse)	tHD:STA	0.6	-	-	µs
Clock Low Time	tLOW	1.3	-	-	µs
Clock High Time	tHIGH	0.6	-	-	µs
Setup Time for Repeated Start Condition	tSU:STA	0.6	-	-	µs
SDA Hold Time from SCL Falling (Note 34)	tHD:DAT	0	-	-	µs
SDA Setup Time from SCL Rising	tSU:DAT	0.1	-	-	µs
Rise Time of Both SDA and SCL Lines	tR	-	-	0.3	µs
Fall Time of Both SDA and SCL Lines	tF	-	-	0.3	µs
Capacitive Load on Bus	Cb	-	-	400	pF
Setup Time for Stop Condition	tSU:STO	0.6	-	-	µs
Pulse Width of Spike Noise Suppressed by Input Filter	tSP	0	-	50	ns
Power-down & Reset Timing					
PDN Pulse Width (Note 35)	tPD	150	-	-	ns

Note 33. I^2C is a registered trademark of Philips Semiconductors
Note 34. Data must be held long enough to bridge the 300ns-transition time of SCL.
Note 35. The AK4343 can be reset by the PDN pin = "L".

■ Timing Diagram

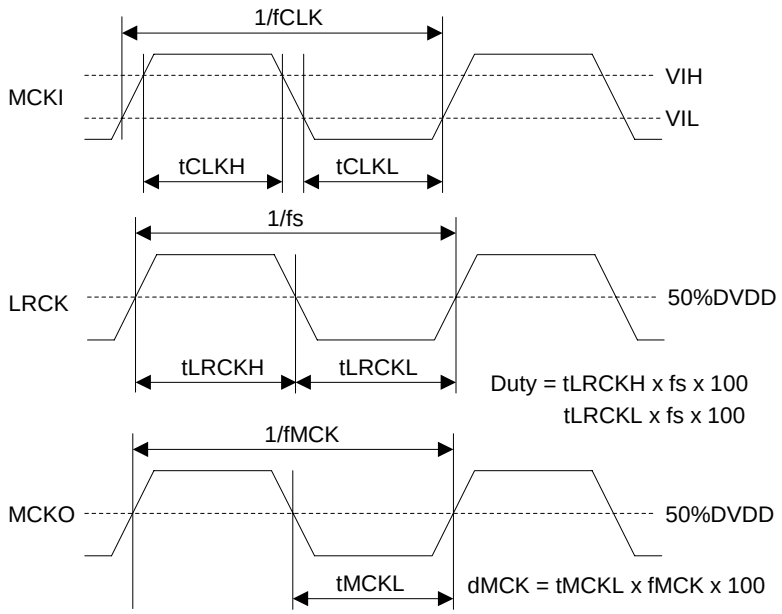

Figure 3. Clock Timing (PLL/EXT Master mode)
Note 36. MCKO is not available at EXT Master mode.

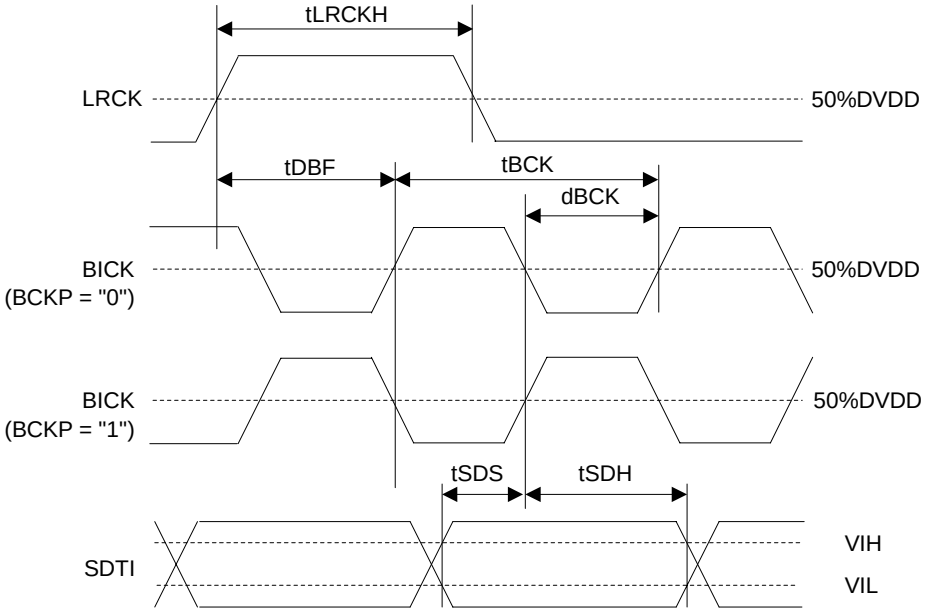

Figure 4. Audio Interface Timing (PLL/EXT Master mode, DSP mode, MSBS = “0”)

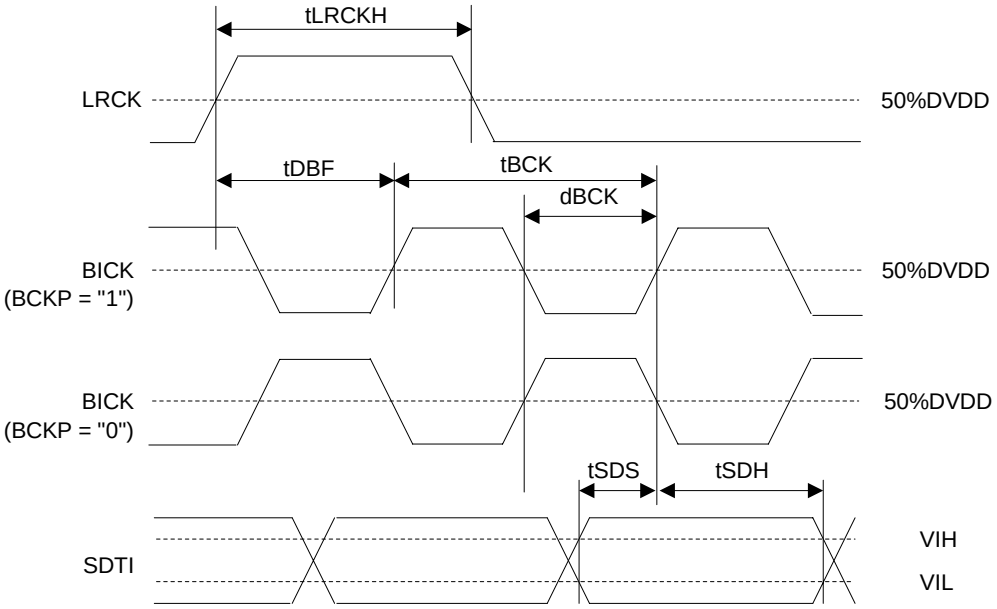

Figure 5. Audio Interface Timing (PLL/EXT Master mode, DSP mode, MSBS = “1”)

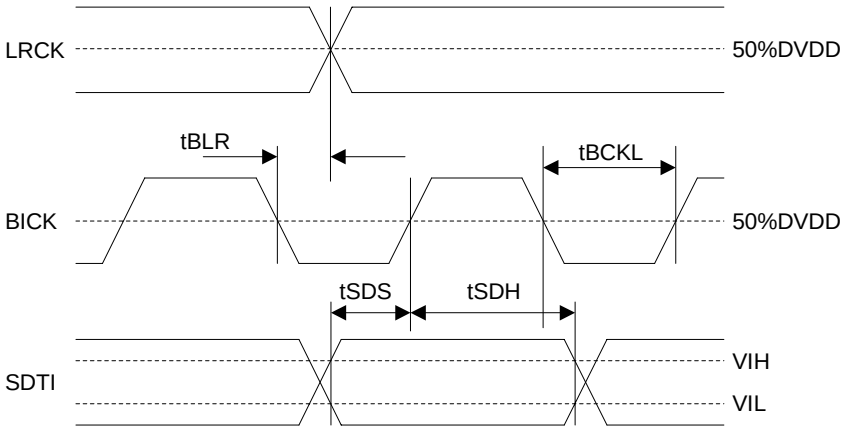

Figure 6. Audio Interface Timing (PLL/EXT Master mode, Except DSP mode)

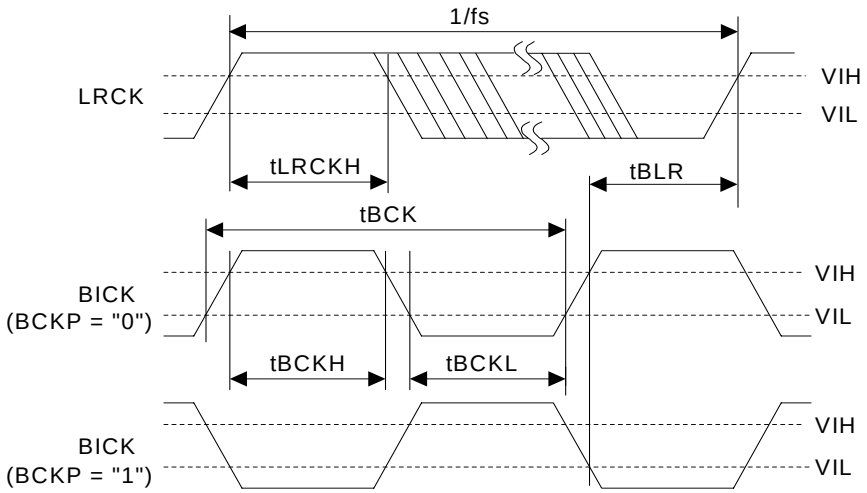

Figure 7. Clock Timing (PLL Slave mode; PLL Reference Clock = LRCK or BICK pin, DSP mode, MSBS = “0”)

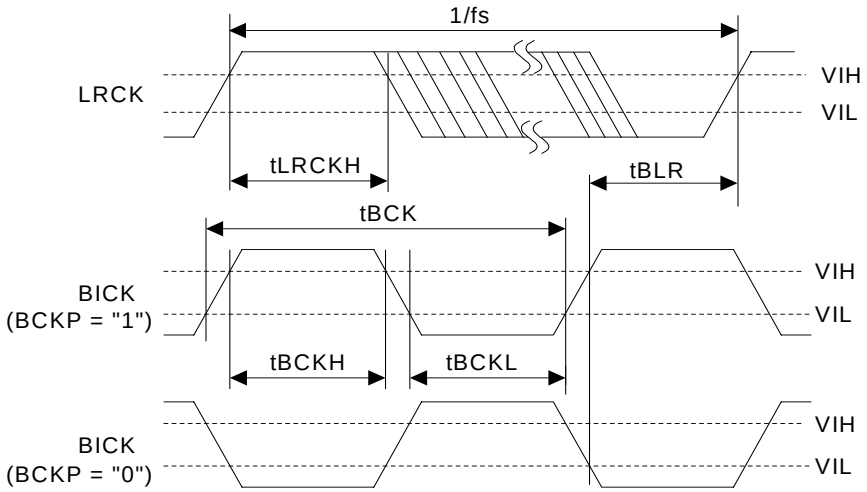

Figure 8. Clock Timing (PLL Slave mode; PLL Reference Clock = LRCK or BICK pin, DSP mode, MSBS = “1”)

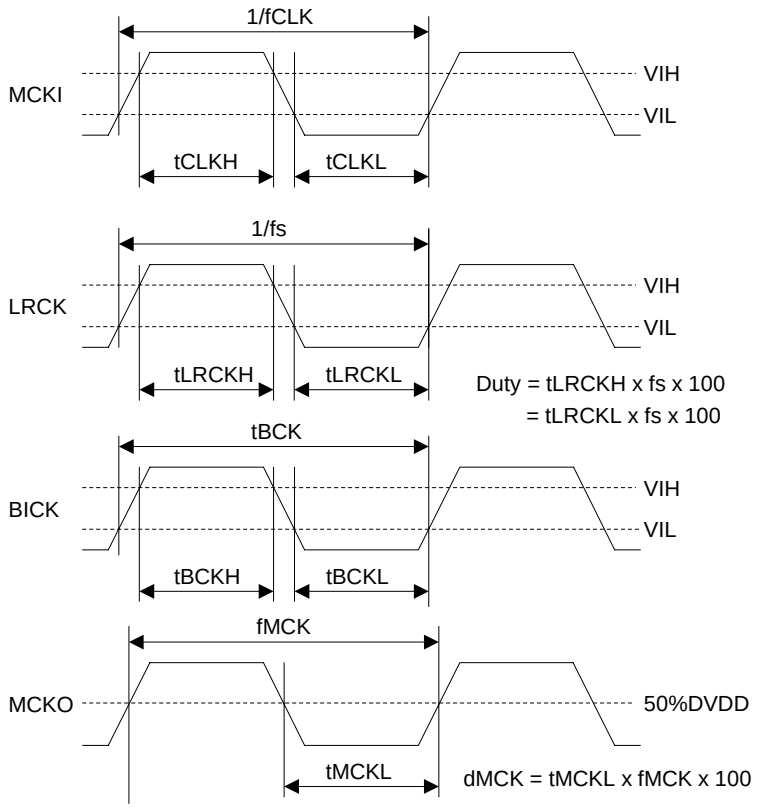

Figure 9. Clock Timing (PLL Slave mode; PLL Reference Clock = MCKI pin, Except DSP mode)

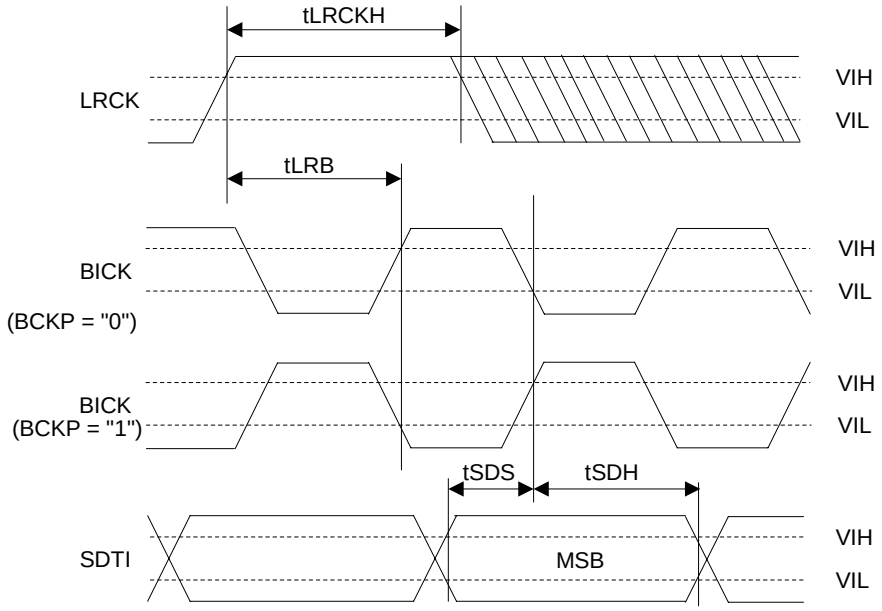

Figure 10. Audio Interface Timing (PLL Slave mode, DSP mode; MSBS = “0”)

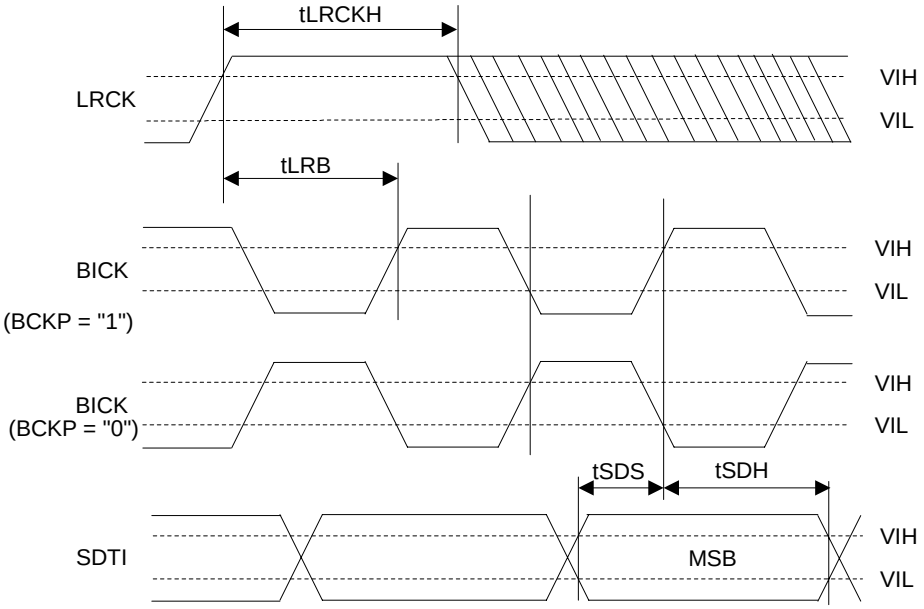

Figure 11. Audio Interface Timing (PLL Slave mode, DSP mode, MSBS = “1”)

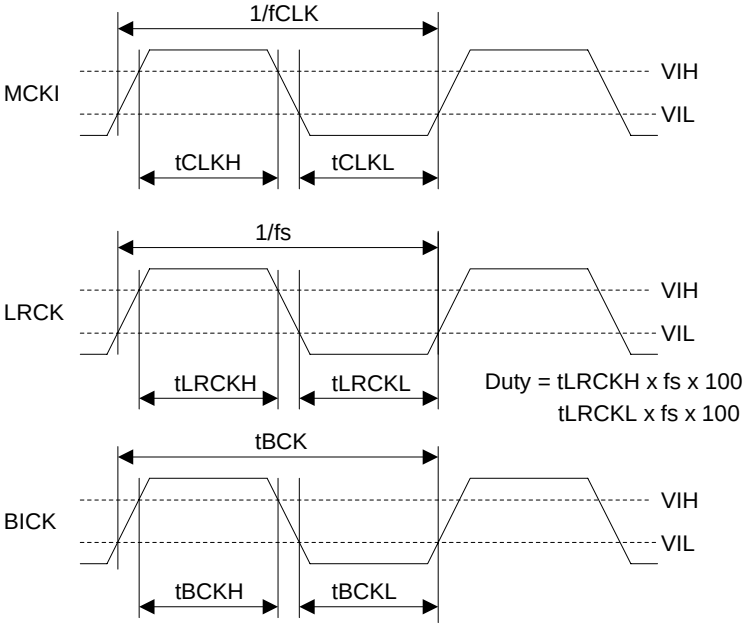

Figure 12. Clock Timing (EXT Slave mode)

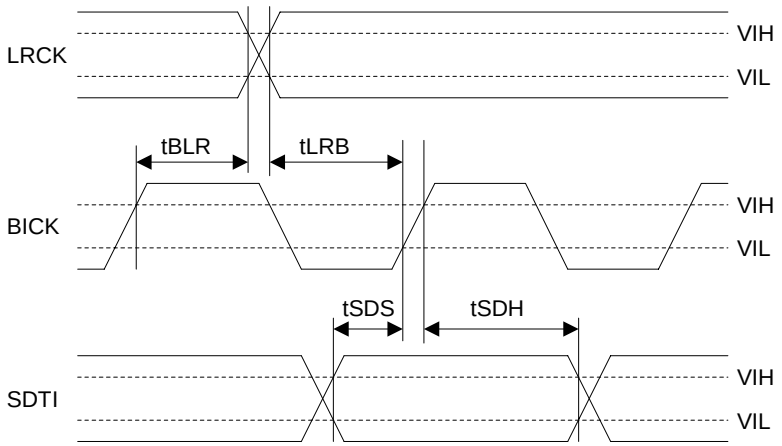

Figure 13. Audio Interface Timing (PLL/EXT Slave mode, Except DSP mode)

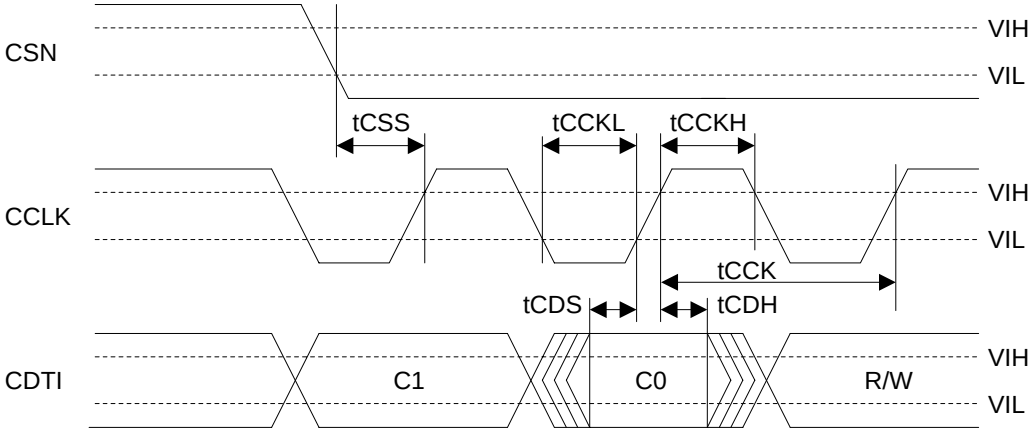

Figure 14. WRITE Command Input Timing

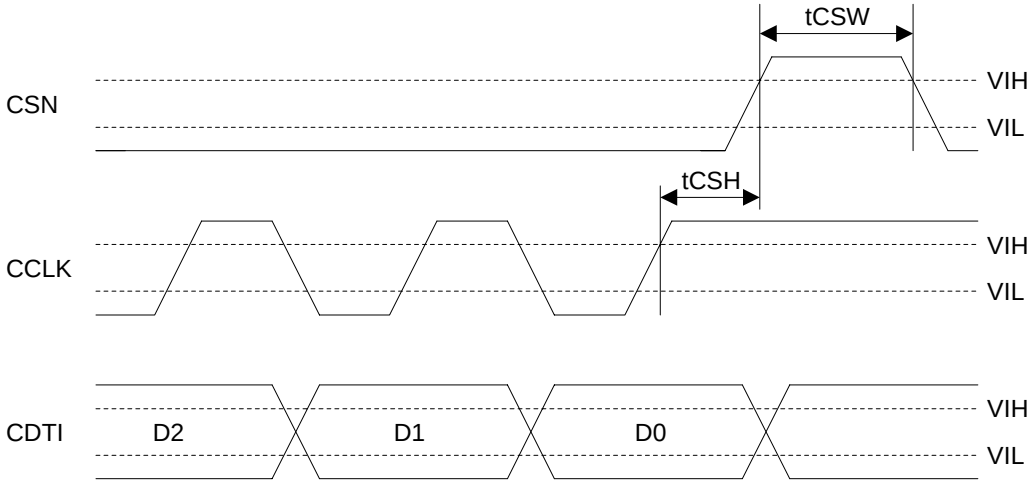

Figure 15. WRITE Data Input Timing

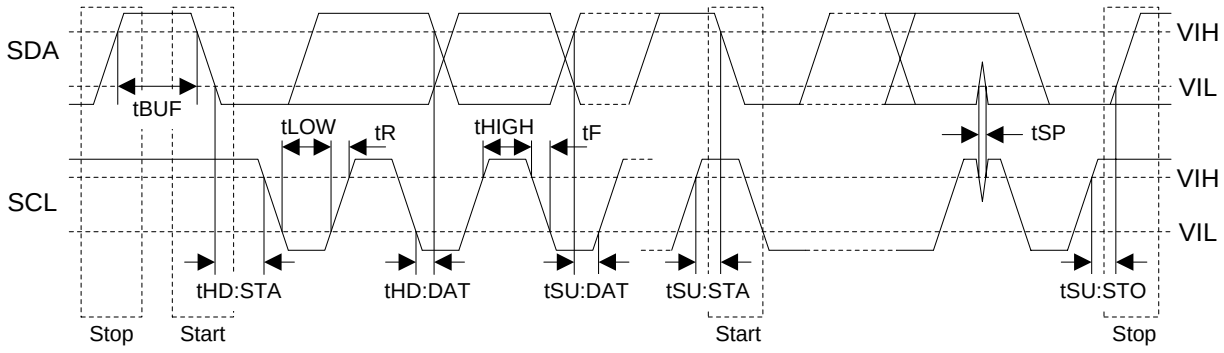

Figure 16. I^{2}C Bus Mode Timing

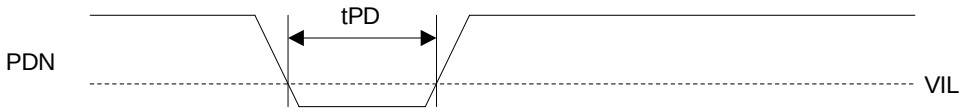

Figure 17. Power Down & Reset Timing

OPERATION OVERVIEW

■ System Clock

There are the following four clock modes to interface with external devices (see Table 2 and Table 3).

Mode	PMPLL bit	M/S bit	PLL3-0 bits	Figure
PLL Master Mode (Note 37)	1	1	See Table 5	Figure 18
PLL Slave Mode 1 (PLL Reference Clock: MCKI pin)	1	0	See Table 5	Figure 19
PLL Slave Mode 2 (PLL Reference Clock: LRCK or BICK pin)	1	0	See Table 5	Figure 20 Figure 21
EXT Slave Mode	0	0	x	Figure 22
EXT Master Mode	0	1	x	Figure 23

Note 37. If M/S bit = “1”, PMPLL bit = “0” and MCKO bit = “1” during the setting of PLL Master Mode, the invalid clocks are output from MCKO pin when MCKO bit is “1”.

Table 2. Clock Mode Setting (x: Don’t care)

Mode	MCKO bit	MCKO pin	MCKI pin	BICK pin	LRCK pin
PLL Master Mode	0	“L”	Selected by PLL3-0 bits	Output (Selected by BCKO bit)	Output (1fs)
	1	Selected by PS1-0 bits			
PLL Slave Mode (PLL Reference Clock: MCKI pin)	0	“L”	Selected by PLL3-0 bits	Input (≥ 32fs)	Input (1fs)
	1	Selected by PS1-0 bits			
PLL Slave Mode (PLL Reference Clock: LRCK or BICK pin)	0	“L”	GND	Input (Selected by PLL3-0 bits)	Input (1fs)
EXT Slave Mode	0	“L”	Selected by FS1-0 bits	Input (≥ 32fs)	Input (1fs)
EXT Master Mode	0	“L”	Selected by FS1-0 bits	Output (Selected by BCKO bit)	Output (1fs)

Table 3. Clock pins state in Clock Mode

■ Master Mode/Slave Mode

The M/S bit selects either master or slave mode. M/S bit = “1” selects master mode and “0” selects slave mode. When the AK4343 is power-down mode (PDN pin = “L”) and exits reset state, the AK4343 is slave mode. After exiting reset state, the AK4343 goes to master mode by changing M/S bit = “1”.

When the AK4343 is used by master mode, LRCK and BICK pins are a floating state until M/S bit becomes “1”. LRCK and BICK pins of the AK4343 should be pulled-down or pulled-up by the resistor (about 100kΩ) externally to avoid the floating state.

M/S bit	Mode	
0	Slave Mode	Default
1	Master Mode	

Table 4. Select Master/Slave Mode

■ PLL Mode (AIN3 bit = “0”, PMPLL bit = “1”)

When PMPLL bit is “1”, a fully integrated analog phase locked loop (PLL) generates a clock that is selected by the PLL3-0 and FS3-0 bits. The PLL lock time is shown in Table 5, whenever the AK4343 is supplied to a stable clocks after PLL is powered-up (PMPLL bit = “0” → “1”) or sampling frequency changes. When AIN3 bit = “1”, the PLL is not available.

1) Setting of PLL Mode

Mode	PLL3 bit	PLL2 bit	PLL1 bit	PLL0 bit	PLL Reference Clock Input Pin	Input Frequency	R and C of VCOC pin		PLL Lock Time (max)	
							R[Ω]	C[F]		
0	0	0	0	0	LRCK pin	1fs	6.8k	220n	160ms	Default
1	0	0	0	1	N/A	-	-	-	-	
2	0	0	1	0	BICK pin	32fs	10k	4.7n	2ms	
							10k	10n	4ms	
3	0	0	1	1	BICK pin	64fs	10k	4.7n	2ms	
							10k	10n	4ms	
4	0	1	0	0	MCKI pin	11.2896MHz	10k	4.7n	40ms	
5	0	1	0	1	MCKI pin	12.288MHz	10k	4.7n	40ms	
6	0	1	1	0	MCKI pin	12MHz	10k	4.7n	40ms	
7	0	1	1	1	MCKI pin	24MHz	10k	4.7n	40ms	
12	1	1	0	0	MCKI pin	13.5MHz	10k	10n	40ms	
13	1	1	0	1	MCKI pin	27MHz	10k	10n	40ms	
Others	Others				N/A					

Table 5. Setting of PLL Mode (*fs: Sampling Frequency)

2) Setting of sampling frequency in PLL Mode
When PLL reference clock input is MCKI pin, the sampling frequency is selected by FS3-0 bits as defined in Table 6.

Mode	FS3 bit	FS2 bit	FS1 bit	FS0 bit	Sampling Frequency	
0	0	0	0	0	8kHz	Default
1	0	0	0	1	12kHz	
2	0	0	1	0	16kHz	
3	0	0	1	1	24kHz	
4	0	1	0	0	7.35kHz	
5	0	1	0	1	11.025kHz	
6	0	1	1	0	14.7kHz	
7	0	1	1	1	22.05kHz	
10	1	0	1	0	32kHz	
11	1	0	1	1	48kHz	
14	1	1	1	0	29.4kHz	
15	1	1	1	1	44.1kHz	
Others	Others				N/A	

Table 6. Setting of Sampling Frequency at PMPLL bit = “1” (Reference Clock = MCKI pin)

When PLL reference clock input is LRCK or BICK pin, the sampling frequency is selected by FS3 and FS1-0 bits. (See Table 7). **FS2 bit is “don’t care”.**

Mode	FS3 bit	FS2 bit	FS1 bit	FS0 bit	Sampling Frequency Range	
0	0	Don’t care	0	0	7.35kHz ≤ fs ≤ 8kHz	Default
1	0	Don’t care	0	1	8kHz < fs ≤ 12kHz	
2	0	Don’t care	1	0	12kHz < fs ≤ 16kHz	
3	0	Don’t care	1	1	16kHz < fs ≤ 24kHz	
6	1	Don’t care	1	0	24kHz < fs ≤ 32kHz	
7	1	Don’t care	1	1	32kHz < fs ≤ 48kHz	
Others	Others				N/A	

Table 7. Setting of Sampling Frequency at PMPLL bit = “1” (Reference Clock = LRCK or BICK pin)

■ PLL Unlock State

1) PLL Master Mode (AIN3 bit = “0”; PMPLL bit = “1”, M/S bit = “1”)

In this mode, LRCK and BICK pins go to “L” and irregular frequency clock is output from MCKO pins at MCKO bit is “1” before the PLL goes to lock state after PMPLL bit = “0” → “1”. If MCKO bit is “0”, MCKO pin goes to “L” (see Table 8).

After the PLL is locked, a first period of LRCK and BICK may be invalid clock, but these clocks return to normal state after a period of 1/fs.

When sampling frequency is changed, BICK and LRCK pins do not output irregular frequency clocks but go to “L” by setting PMPLL bit to “0”.

PLL State	MCKO pin		BICK pin	LRCK pin
	MCKO bit = “0”	MCKO bit = “1”		
After that PMPLL bit “0” → “1”	“L” Output	Invalid	“L” Output	“L” Output
PLL Unlock (except above case)	“L” Output	Invalid	Invalid	Invalid
PLL Lock	“L” Output	See Table 10	See Table 11	1fs Output

Table 8. Clock Operation at PLL Master Mode (PMPLL bit = “1”, M/S bit = “1”)

2) PLL Slave Mode (AIN3 bit = “0”, PMPLL bit = “1”, M/S bit = “0”)

In this mode, an invalid clock is output from MCKO pin before the PLL goes to lock state after PMPLL bit = “0” → “1”. After that, the clock selected by Table 10 is output from MCKO pin when PLL is locked. DAC output invalid data when the PLL is unlocked. The output signal should be muted by writing “0” to DACL, DACH and DACS bits.

PLL State	MCKO pin	
	MCKO bit = “0”	MCKO bit = “1”
After that PMPLL bit “0” → “1”	“L” Output	Invalid
PLL Unlock	“L” Output	Invalid
PLL Lock	“L” Output	Output

Table 9. Clock Operation at PLL Slave Mode (PMPLL bit = “0”, M/S bit = “0”)

■ PLL Master Mode (AIN3 bit = “0”, PMPLL bit = “1”, M/S bit = “1”)

When an external clock (11.2896MHz, 12MHz, 12.288MHz, 13.5MHz, 24MHz or 27MHz) is input to MCKI pin, the MCKO, BICK and LRCK clocks are generated by an internal PLL circuit. The MCKO output frequency is selected by PS1-0 bits (see Table 10) and the output is enabled by MCKO bit. The BICK output frequency is selected between 32fs or 64fs, by BCKO bit (see Table 11).

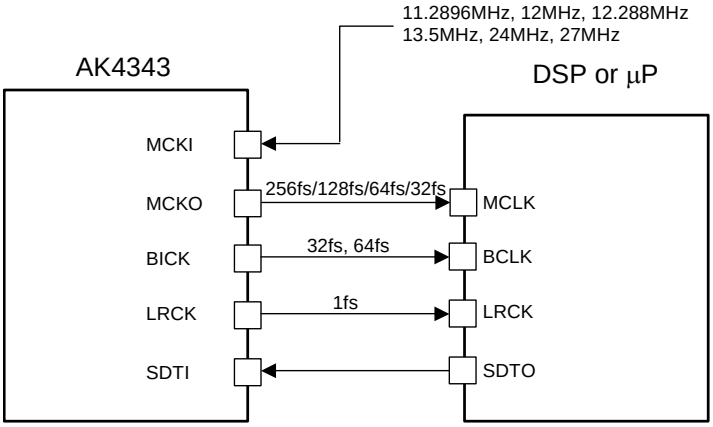

Figure 18. PLL Master Mode

Mode	PS1 bit	PS0 bit	MCKO pin	
0	0	0	256fs	Default
1	0	1	128fs	
2	1	0	64fs	
3	1	1	32fs	

Table 10. MCKO Output Frequency (PLL Mode, MCKO bit = “1”)

BCKO bit	BICK Output Frequency	
0	32fs	Default
1	64fs	

Table 11. BICK Output Frequency at Master Mode

■ PLL Slave Mode (AIN3 bit = “0”, PMPLL bit = “1”, M/S bit = “0”)

A reference clock of PLL is selected among the input clocks to MCKI, BICK or LRCK pin. The required clock to the AK4343 is generated by an internal PLL circuit. Input frequency is selected by PLL3-0 bits (see Table 5).

a) PLL reference clock: MCKI pin

BICK and LRCK inputs should be synchronized with MCKO output. The phase between MCKO and LRCK dose not matter. MCKO pin outputs the frequency selected by PS1-0 bits (see Table 10) and the output is enabled by MCKO bit. Sampling frequency can be selected by FS3-0 bits (see Table 6).

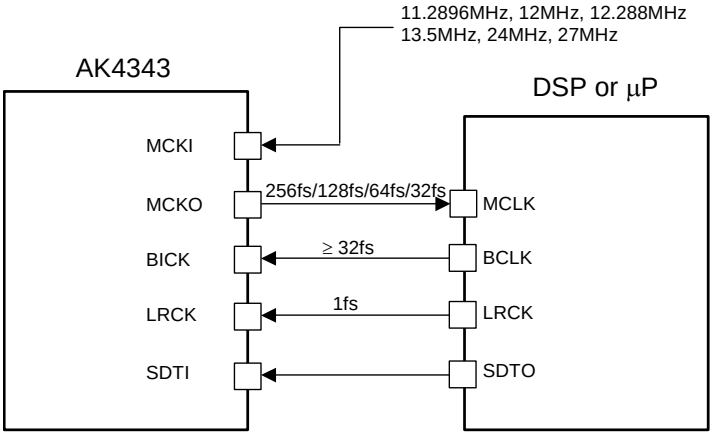

Figure 19. PLL Slave Mode 1 (PLL Reference Clock: MCKI pin)

b) PLL reference clock: BICK or LRCK pin

Sampling frequency corresponds to 7.35kHz to 48kHz by changing FS3-0 bits (see Table 7).

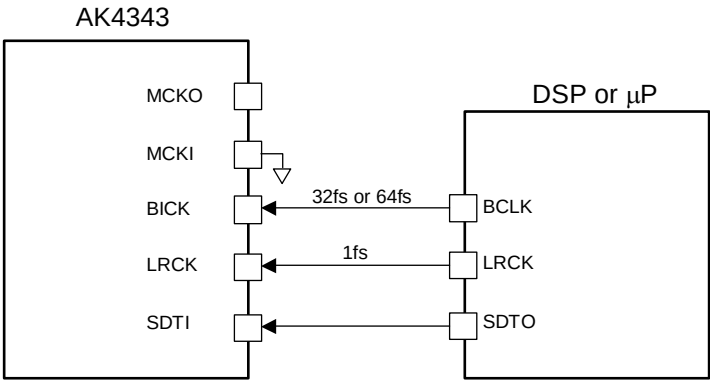

Figure 20. PLL Slave Mode 2 (PLL Reference Clock: BICK pin)

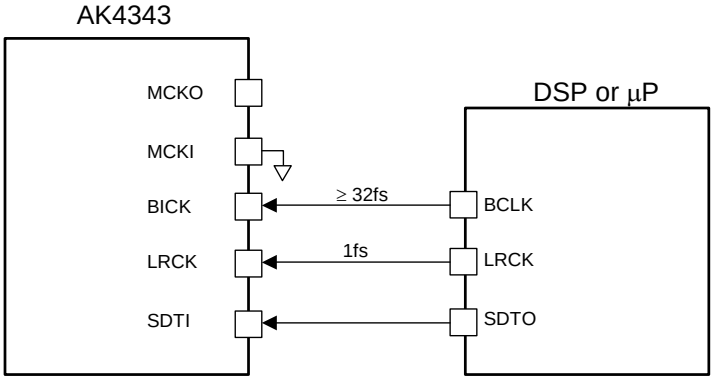

Figure 21. PLL Slave Mode 2 (PLL Reference Clock: LRCK pin)

The external clocks (MCKI, BICK and LRCK) should always be present whenever the DAC is in operation (PMDAC bit = “1”). If these clocks are not provided, the AK4343 may draw excess current and it is not possible to operate properly because utilizes dynamic refreshed logic internally. If the external clocks are not present, the DAC should be in the power-down mode (PMDAC bit = “0”).

■ EXT Slave Mode (PMPLL bit = “0”, M/S bit = “0”)

When PMPLL bit is “0”, the AK4343 becomes EXT mode. Master clock is input from MCKI pin, the internal PLL circuit is not operated. This mode is compatible with I/F of the normal audio DAC. The clocks required to operate are MCKI (256fs, 512fs or 1024fs), LRCK (fs) and BICK (≥32fs). The master clock (MCKI) should be synchronized with LRCK. The phase between these clocks does not matter. The input frequency of MCKI is selected by FS1-0 bits (see Table 12).

Mode	FS3-2 bits	FS1 bit	FS0 bit	MCKI Input Frequency	Sampling Frequency Range	
0	Don’t care	0	0	256fs	7.35kHz ~ 48kHz	Default
1	Don’t care	0	1	1024fs	7.35kHz ~ 13kHz	
2	Don’t care	1	0	256fs	7.35kHz ~ 48kHz	
3	Don’t care	1	1	512fs	7.35kHz ~ 26kHz	

Table 12. MCKI Frequency at EXT Slave Mode (PMPLL bit = “0”, M/S bit = “0”)

The S/N of the DAC at low sampling frequencies is worse than at high sampling frequencies due to out-of-band noise. The out-of-band noise can be improved by using higher frequency of the master clock. The S/N of the DAC output through LOUT/ROUT pins at fs=8kHz is shown in Table 13.

MCKI	S/N (fs=8kHz, 20kHzLPF + A-weighted)
256fs	83dB
512fs	93dB
1024fs	93dB

Table 13. Relationship between MCKI and S/N of LOUT/ROUT pins

The external clocks (MCKI, BICK and LRCK) should always be present whenever the DAC is in operation (PMDAC bit = “1”). If these clocks are not provided, the AK4343 may draw excess current and it is not possible to operate properly because utilizes dynamic refreshed logic internally. If the external clocks are not present, the DAC should be in the power-down mode (PMDAC bit = “0”).

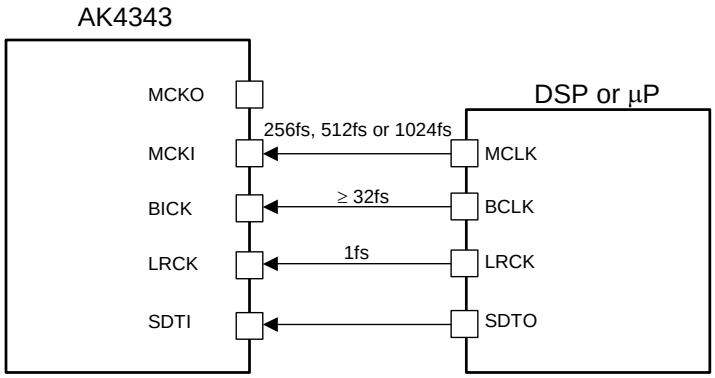

Figure 22. EXT Slave Mode

■ EXT Master Mode (PMPLL bit = “0”, M/S bit = “1”)

The AK4343 becomes EXT Master Mode by setting PMPLL bit = “0” and M/S bit = “1”. Master clock is input from MCKI pin, the internal PLL circuit is not operated. The clock required to operate is MCKI (256fs, 512fs or 1024fs). The input frequency of MCKI is selected by FS1-0 bits (see Table 14).

Mode	FS3-2 bits	FS1 bit	FS0 bit	MCKI Input Frequency	Sampling Frequency Range	
0	Don’t care	0	0	256fs	7.35kHz ~ 48kHz	Default
1	Don’t care	0	1	1024fs	7.35kHz ~ 13kHz	
2	Don’t care	1	0	256fs	7.35kHz ~ 48kHz	
3	Don’t care	1	1	512fs	7.35kHz ~ 26kHz	

Table 14. MCKI Frequency at EXT Master Mode (PMPLL bit = “0”, M/S bit = “1”)

The S/N of the DAC at low sampling frequencies is worse than at high sampling frequencies due to out-of-band noise. The out-of-band noise can be improved by using higher frequency of the master clock. The S/N of the DAC output through LOUT/ROUT pins at fs=8kHz is shown in Table 15.

MCKI	S/N (fs=8kHz, 20kHzLPF + A-weighted)
256fs	83dB
512fs	93dB
1024fs	93dB

Table 15. Relationship between MCKI and S/N of LOUT/ROUT pins

MCKI should always be present whenever the DAC is in operation (PMDAC bit = “1”). If MCKI is not provided, the AK4343 may draw excess current and it is not possible to operate properly because utilizes dynamic refreshed logic internally. If MCKI is not present, the DAC should be in the power-down mode (PMDAC bit = “0”).

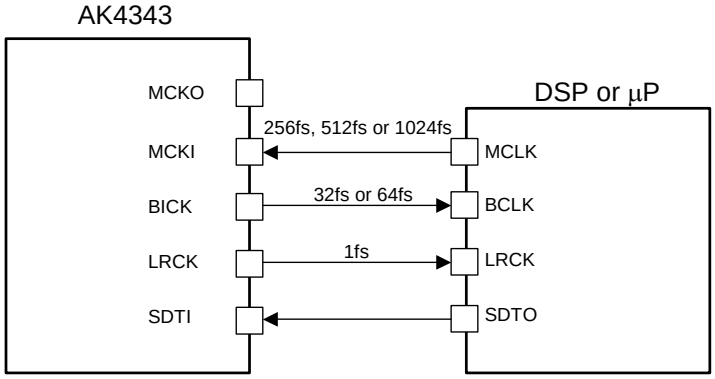

Figure 23. EXT Master Mode

BCKO bit	BICK Output Frequency	
0	32fs	Default
1	64fs	

Table 16. BICK Output Frequency at Master Mode

■ System Reset

Upon power-up, the AK4343 should be reset by bringing the PDN pin = “L”. This ensures that all internal registers reset to their initial values.

The DAC enters an initialization cycle that starts when the PMDAC bit is changed from “0” to “1”. The initialization cycle time is 1059/fs=24ms@fs=44.1kHz. During the initialization cycle, the DAC input digital data of both channels are internally forced to a 2’s compliment, “0”. The DAC output reflects the digital input data after the initialization cycle is complete.

■ Audio Interface Format

Four types of data formats are available and are selected by setting the DIF1-0 bits (seeTable 17). In all modes, the serial data is MSB first, 2’s complement format. Audio interface formats can be used in both master and slave modes. LRCK and BICK are output from the AK4343 in master mode, but must be input to the AK4343 in slave mode.

Mode	DIF1 bit	DIF0 bit	SDTI (DAC)	BICK	Figure	
0	0	0	DSP Mode	≥ 32fs	Table 18	
1	0	1	LSB justified	≥ 32fs	Figure 28	
2	1	0	MSB justified	≥ 32fs	Figure 29	Default
3	1	1	I^2S compatible	≥ 32fs	Figure 30	

Table 17. Audio Interface Format

In modes 1, 2 and 3, the SDTI is latched on the rising edge (“↑”) of BICK.

In Modes 0 (DSP mode), the audio I/F timing is changed by BCKP and MSBS bits (Table 18).

DIF1	DIF0	MSBS	BCKP	Audio Interface Format	Figure	
0	0	0	0	MSB of SDTI is latched by the falling edge (“↓”) of the BICK just after the rising edge (“↑”) of the first BICK after the rising edge (“↑”) of LRCK.	Figure 24	Default
		0	1	MSB of SDTI is latched by the rising edge (“↑”) of the BICK just after the falling edge (“↓”) of the first BICK after the rising edge (“↑”) of LRCK.	Figure 25	
		1	0	MSB of SDTI is latched by the 2nd falling edge (“↓”) of the BICK after the rising edge (“↑”) of LRCK.	Figure 26	
		1	1	MSB of SDTI is latched by the 2nd rising edge (“↑”) of the BICK after the rising edge (“↑”) of LRCK..	Figure 27	

Table 18. Audio Interface Format in Mode 0

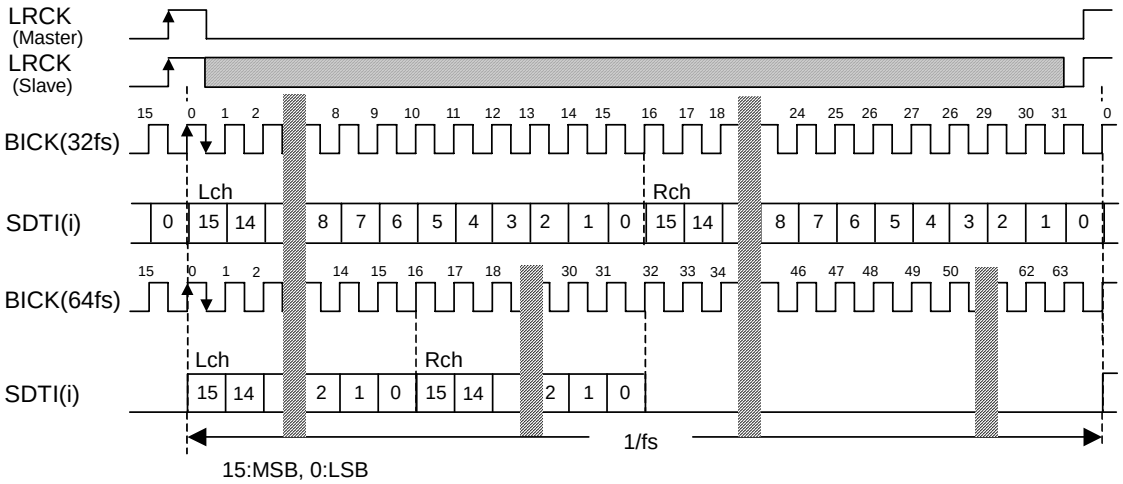

Figure 24. Mode 0 Timing (BCKP = “0”, MSBS = “0”)

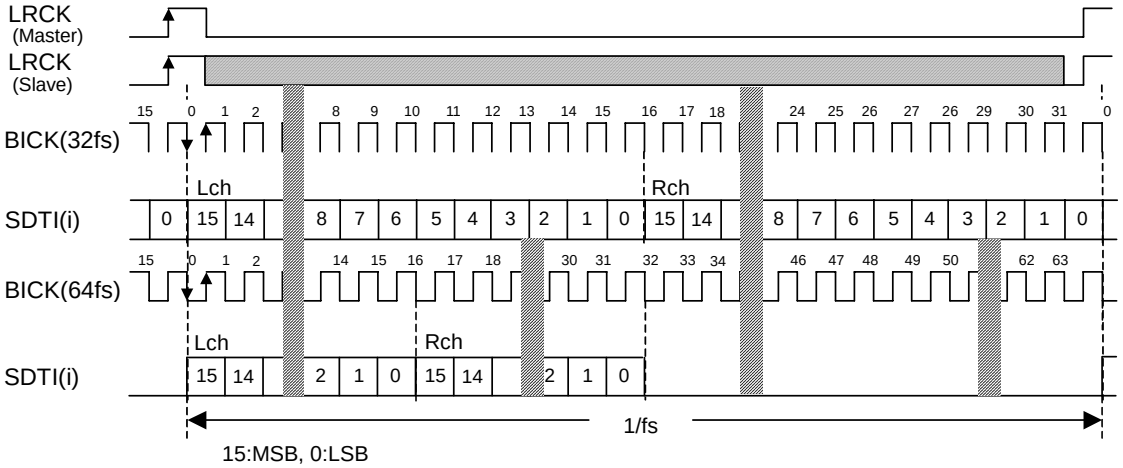

Figure 25. Mode 0 Timing (BCKP = “1”, MSBS = “0”)

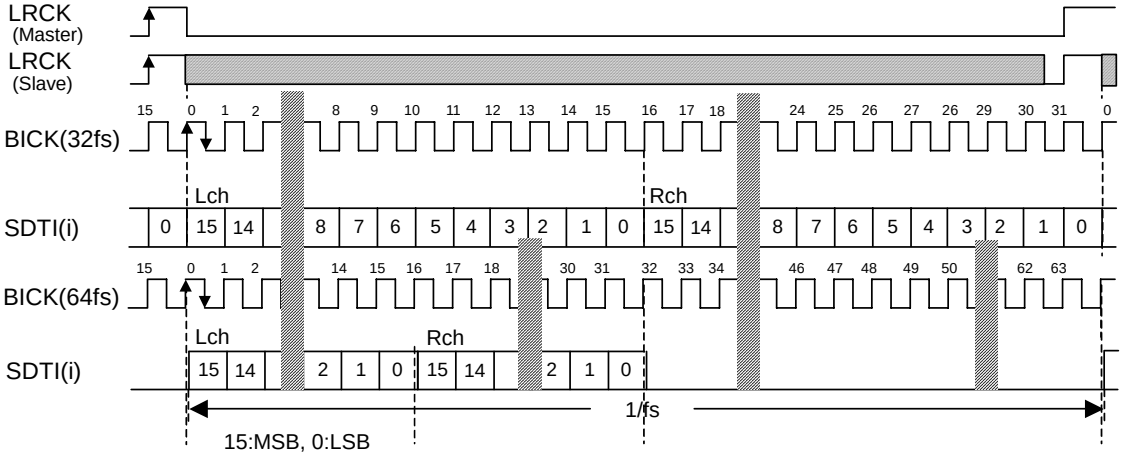

Figure 26. Mode 0 Timing (BCKP = “0”, MSBS = “1”)

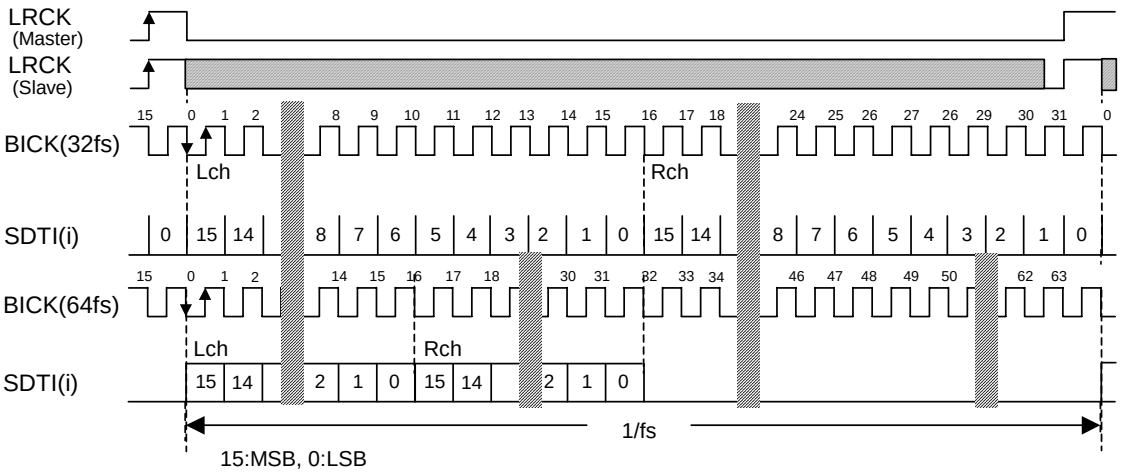

Figure 27. Mode 0 Timing (BCKP = “1”, MSBS = “1”)

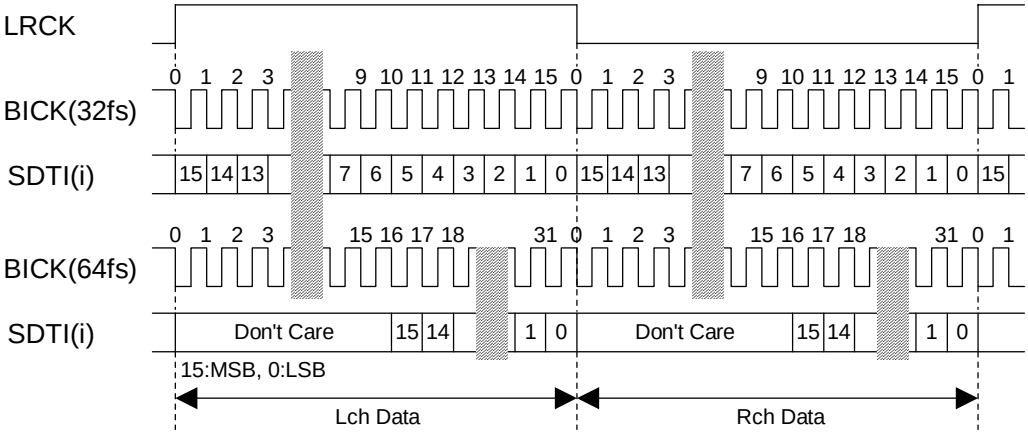

Figure 28. Mode 1 Timing

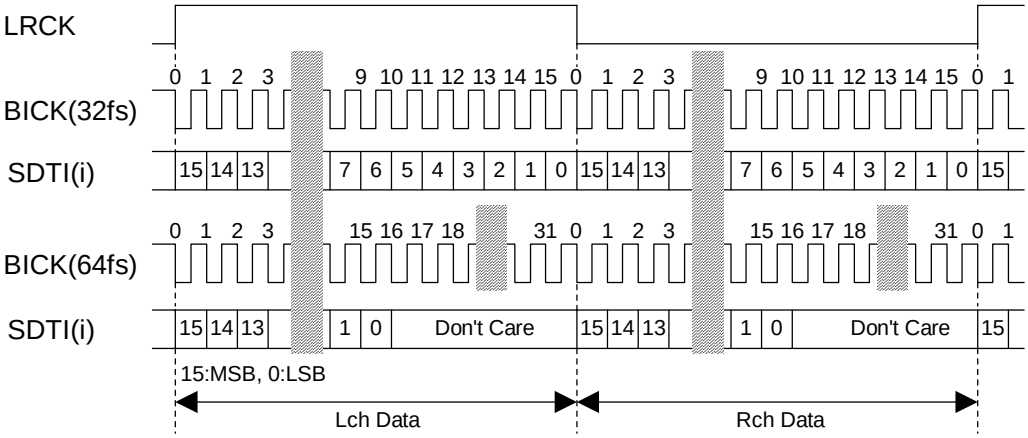

Figure 29. Mode 2 Timing

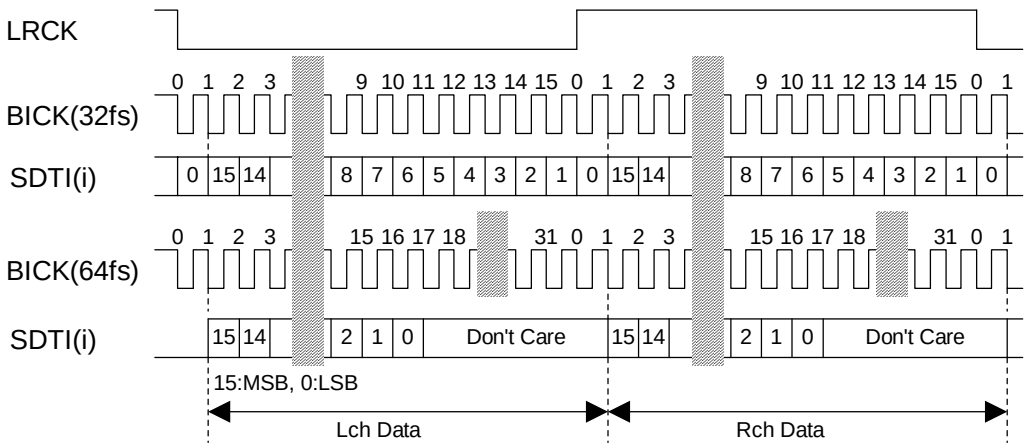

Figure 30. Mode 3 Timing

■ Digital High Pass Filter

The AK4343 has a digital high pass filter for DC offset cancellation. The cut-off frequency of the HPF is 0.9Hz (@fs=44.1kHz) and scales with sampling rate (fs).

■ Input Selector

The AK4343 has input selector. When MDIF1 and MDIF2 bits are “0”, INL1-0 and INR1-0 bits select LIN1/LIN2/LIN3 and RIN1/RIN2/RIN3, respectively. When MDIF1 and MDIF2 bits are “1”, LIN1, RIN1, LIN2 and RIN2 pins become IN1–, IN1+, IN2+ and IN2– pins respectively. In this case, full-differential input is available. When full-differential input is used, the signal should not be input to the pins marked by “X” in Table 20.

MDIF1 bit	MDIF2 bit	INL1 bit	INL0 bit	INR1 bit	INR0 bit	Lch	Rch	
0	0	0	0	0	0	LIN1	RIN1	Default
0	0	0	0	0	1	LIN1	RIN2	
0	0	0	0	1	0	LIN1	RIN3	
0	0	0	1	0	0	LIN2	RIN1	
0	0	0	1	0	1	LIN2	RIN2	
0	0	0	1	1	0	LIN2	RIN3	
0	0	1	0	0	0	LIN3	RIN1	
0	0	1	0	0	1	LIN3	RIN2	
0	0	1	0	1	0	LIN3	RIN3	
0	1	0	0	0	0	LIN1	IN2+/–	
0	1	1	0	0	0	LIN3	IN2+/–	
1	0	0	0	0	1	IN1+/–	RIN2	
1	0	0	0	1	0	IN1+/–	RIN3	
1	1	0	0	0	0	IN1+/–	IN2+/–	
Others						N/A	N/A	

Table 19. Input Path Select

Register			Pin					
AIN3 bit	MDIF1 bit	MDIF2 bit	LIN1 IN1–	RIN1 IN1+	LIN2 IN2+	RIN2 IN2–	MIN LIN3	VCOC RIN3
0	0	0	O	O	O	O	O	-
0	0	1	O	X	O	O	O	-
0	1	0	O	O	X	O	O	-
0	1	1	O	O	O	O	O	-
1	0	0	O	O	O	O	O	O
1	0	1	O	X	O	O	O	X
1	1	0	O	O	X	O	X	O
1	1	1	O	O	O	O	X	X

Table 20. Handling of Line Input Pins ("-": N/A; "X": Signal should not be input.)

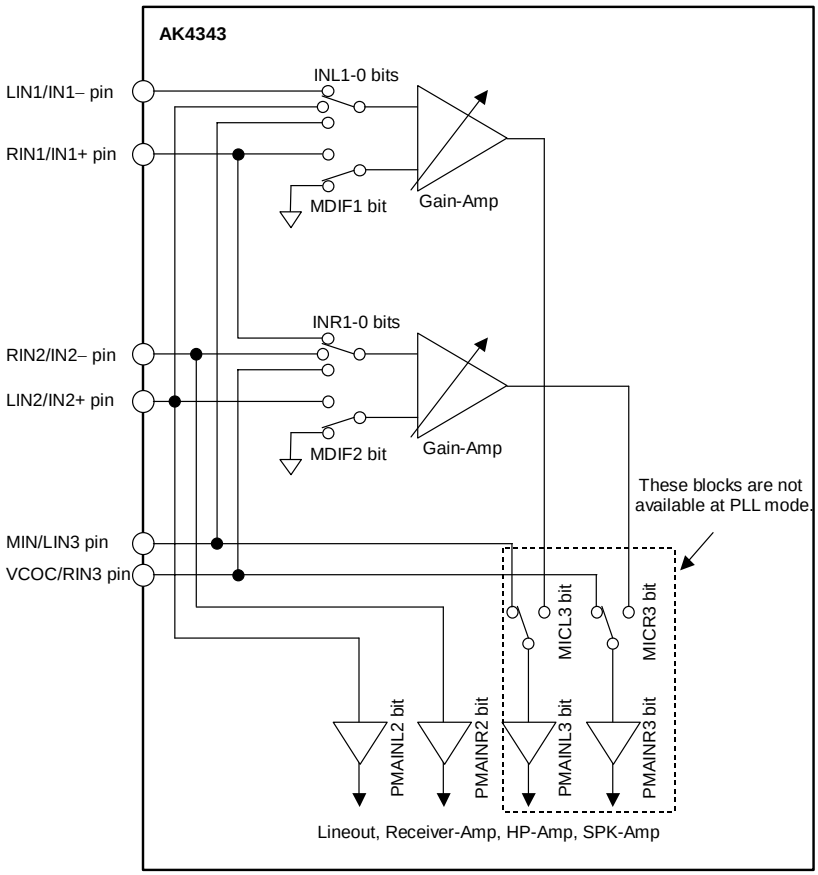

Figure 31. Input Selector

<Input Selector Setting Example>

In case that IN1+/– pins are used as full-differential mic input and LIN2/RIN2 pins are used as stereo line input, it is recommended that the following two modes are set by register setting according to each case.

MDIF1 bit	MDIF2 bit	INL1 bit	INL0 bit	INR1 bit	INR0 bit	Lch	Rch
1	0	0	0	0	1	IN1+/–	RIN2
0	0	0	1	0	1	LIN2	RIN2

Table 21. Line In Path Select Example

■ Gain Amplifier

The AK4343 has a gain amplifier. The gain is selected by the MGAIN1-0 bits (see Table 22). The typical input impedance is 60kΩ(typ)@MGAIN1-0 bits = “00” or 30kΩ(typ)@MGAIN1-0 bits = “01”, “10” or “11”.

MGAIN1 bit	MGAIN0 bit	Input Gain	
0	0	0dB	
0	1	+20dB	Default
1	0	+26dB	
1	1	+32dB	

Table 22. Input Gain

■ Digital EQ/HPF/LPF

The AK4343 performs wind-noise reduction filter, stereo separation emphasis, gain compensation and ALC (Automatic Level Control) by digital domain for input data (Figure 32). FIL1, FIL3 and EQ blocks are IIR filters of 1st order. The filter coefficient of FIL3, EQ and FIL1 blocks can be set to any value. Refer to the section of “ALC operation” about ALC.

FIL3 coefficient also sets the attenuation of the stereo separation emphasis.

The combination of GN1-0 bit (Table 23) and EQ coefficient set the compensation gain.

FIL1 and FIL3 blocks become HPF when F1AS and F3AS bits are “0” and become LPF when F1AS and F3AS bits are “1”, respectively.

When EQ and FIL1 bits are “0”, EQ and FIL1 blocks become “through” (0dB). When FIL3 bit is “0”, FIL3 block become “MUTE”. When each filter coefficient is changed, each filter should be set to “through” (“MUTE” in case of FIL3).

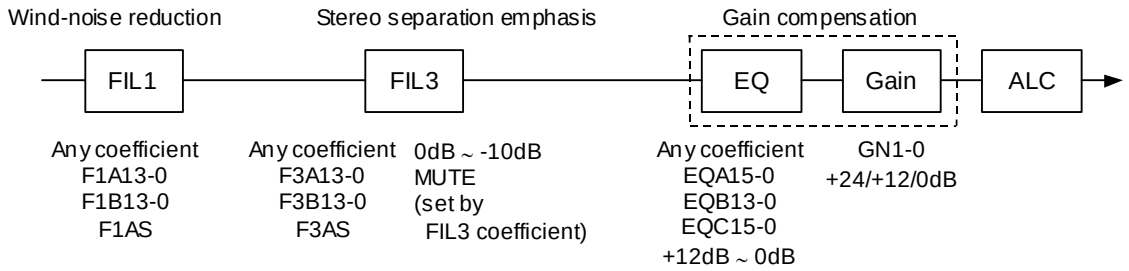

Figure 32. Digital EQ/HPF/LPF

GN1	GN0	Gain	
0	0	0dB	Default
0	1	+12dB	
1	x	+24dB	

Table 23. Gain select of gain block (x: Don’t care)

[Filter Coefficient Setting]

1) When FIL1 and FIL2 are set to “HPF”

fs: Sampling frequency
fc: Cut-off frequency
f: Input signal frequency
K: Filter gain [dB] (Filter gain of should be set to 0dB.)

Register setting
FIL1: F1AS bit = “0”, F1A[13:0] bits =A, F1B[13:0] bits =B
FIL3: F3AS bit = “0”, F3A[13:0] bits =A, F3B[13:0] bits =B
(MSB=F1A13, F1B13, F3A13, F3B13; LSB=F1A0, F1B0, F3A0, F3B0)

$$A = 10^{K/20} \times \frac{1 / \tan(\pi fc/fs)}{1 + 1 / \tan(\pi fc/fs)}, \quad B = \frac{1 - 1 / \tan(\pi fc/fs)}{1 + 1 / \tan(\pi fc/fs)}$$

Transfer function	Amplitude	Phase
$H(z) = A \frac{1 - z^{-1}}{1 + Bz^{-1}}$	$M(f) = A \sqrt{\frac{2 - 2\cos(2\pi f/fs)}{1 + B^2 + 2B\cos(2\pi f/fs)}}$	$\theta(f) = \tan^{-1} \frac{(B+1)\sin(2\pi f/fs)}{1 - B + (B-1)\cos(2\pi f/fs)}$

2) When FIL1 and FIL2 are set to “LPF”

fs: Sampling frequency
fc: Cut-off frequency
f: Input signal frequency
K: Filter gain [dB] (Filter gain of FIL1 should be set to 0dB.)

Register setting
FIL1: F1AS bit = “1”, F1A[13:0] bits =A, F1B[13:0] bits =B
FIL3: F3AS bit = “1”, F3A[13:0] bits =A, F3B[13:0] bits =B
(MSB=F1A13, F1B13, F3A13, F3B13; LSB=F1A0, F1B0, F3A0, F3B0)

$$A = 10^{K/20} \times \frac{1}{1 + 1 / \tan(\pi fc/fs)}, \quad B = \frac{1 - 1 / \tan(\pi fc/fs)}{1 + 1 / \tan(\pi fc/fs)}$$

Transfer function	Amplitude	Phase
$H(z) = A \frac{1 + z^{-1}}{1 + Bz^{-1}}$	$M(f) = A \sqrt{\frac{2 + 2\cos(2\pi f/fs)}{1 + B^2 + 2B\cos(2\pi f/fs)}}$	$\theta(f) = \tan^{-1} \frac{(B-1)\sin(2\pi f/fs)}{1 + B + (B+1)\cos(2\pi f/fs)}$

3) EQ

fs: Sampling frequency
fc_1: Pole frequency
fc_2: Zero-point frequency
f: Input signal frequency
K: Filter gain [dB] (Maximum +12dB)

Register setting
EQA[15:0] bits =A, EQB[13:0] bits =B, EQC[15:0] bits =C
(MSB=EQA15, EQB13, EQC15; LSB=EQA0, EQB0, EQC0)

$$A = 10^{K/20} \times \frac{1 + 1 / \tan(\pi fc_2/fs)}{1 + 1 / \tan(\pi fc_1/fs)}, \quad B = \frac{1 - 1 / \tan(\pi fc_1/fs)}{1 + 1 / \tan(\pi fc_1/fs)}, \quad C = 10^{K/20} \times \frac{1 - 1 / \tan(\pi fc_2/fs)}{1 + 1 / \tan(\pi fc_1/fs)}$$

Transfer function	Amplitude	Phase
$H(z) = \frac{A + Cz^{-1}}{1 + Bz^{-1}}$	$M(f) = \sqrt{\frac{A^2 + C^2 + 2AC\cos(2\pi f/fs)}{1 + B^2 + 2B\cos(2\pi f/fs)}}$	$\theta(f) = \tan^{-1}\frac{(AB-C)\sin(2\pi f/fs)}{A + BC + (AB+C)\cos(2\pi f/fs)}$

[Translation the filter coefficient calculated by the equations above from real number to binary code (2's complement)]
X = (Real number of filter coefficient calculated by the equations above) x 2^{13}

X should be rounded to integer, and then should be translated to binary code (2's complement).
MSB of each filter coefficient setting register is sine bit.

[Filter Coefficient Setting Example]

1) FIL1 block
Example: HPF, fs=44.1kHz, fc=100Hz
F1AS bit = "0"
F1A[13:0] bits = 01 1111 1100 0110
F1B[13:0] bits = 10 0000 0111 0100

2) EQ block
Example: fs=44.1kHz, fc_1=300Hz, fc_2=3000Hz, Gain=+8dB

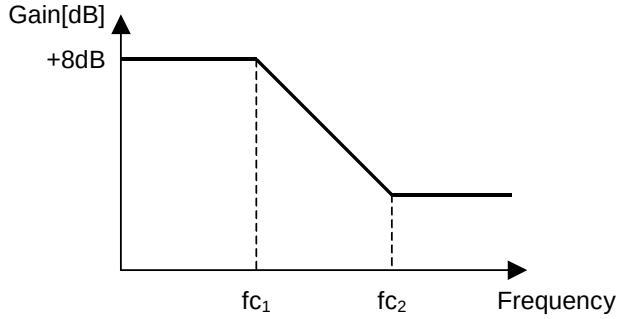

EQA[15:0] bits = 0000 1001 0110 1110
EQB[13:0] bits = 10 0001 0101 1001
EQC[15:0] bits = 1111 1001 1110 1111

■ ALC Operation

The ALC (Automatic Level Control) is done by ALC block when ALC bit is “1”.

1. ALC Limiter Operation

During the ALC limiter operation, when either Lch or Rch exceeds the ALC limiter detection level (Table 24), the AVL and AVR values (same value) are attenuated automatically by the amount defined by the ALC limiter ATT step (Table 25).

When ZELMN bit = “0” (zero cross detection is enabled), the AVL and AVR values are changed by ALC limiter operation at the individual zero crossing points of Lch and Rch or at the zero crossing timeout. ZTM1-0 bits set the zero crossing timeout period of both ALC limiter and recovery operation (Table 26).

When ZELMN bit = “1” (zero cross detection is disabled), AVL and AVR values are immediately (period: 1/fs) changed by ALC limiter operation. Attenuation step is fixed to 1 step regardless as the setting of LMAT1-0 bits.

The attenuation operation is done continuously until the input signal level becomes ALC limiter detection level (Table 24) or less. After completing the attenuation operation, unless ALC bit is changed to “0”, the operation repeats when the input signal level exceeds LMTH1-0 bits.

LMTH1	LMTH0	ALC Limier Detection Level	ALC Recovery Waiting Counter Reset Level	
0	0	ALC Output ≥ –2.5dBFS	–2.5dBFS > ALC Output ≥ –4.1dBFS	Default
0	1	ALC Output ≥ –4.1dBFS	–4.1dBFS > ALC Output ≥ –6.0dBFS	
1	0	ALC Output ≥ –6.0dBFS	–6.0dBFS > ALC Output ≥ –8.5dBFS	
1	1	ALC Output ≥ –8.5dBFS	–8.5dBFS > ALC Output ≥ –12dBFS	

Table 24. ALC Limiter Detection Level / Recovery Counter Reset Level

ZELMN	LMAT1	LMAT0	ALC Limiter ATT Step		
0	0	0	1 step	0.375dB	Default
	0	1	2 step	0.750dB	
	1	0	4 step	1.500dB	
	1	1	8 step	3.000dB	
1	x	x	1step	0.375dB	

Table 25. ALC Limiter ATT Step (x: Don’t care)

ZTM1	ZTM0		Zero Crossing Timeout Period			
			8kHz	16kHz	44.1kHz	
0	0	128/fs	16ms	8ms	2.9ms	Default
0	1	256/fs	32ms	16ms	5.8ms	
1	0	512/fs	64ms	32ms	11.6ms	
1	1	1024/fs	128ms	64ms	23.2ms	

Table 26. ALC Zero Crossing Timeout Period

2. ALC Recovery Operation

The ALC recovery operation waits for the WTM2-0 bits (Table 27) to be set after completing the ALC limiter operation. If the input signal does not exceed “ALC recovery waiting counter reset level” (Table 24) during the wait time, the ALC recovery operation is done. The AVL and AVR values are automatically incremented by RGAIN1-0 bits (Table 28) up to the set reference level (Table 29) with zero crossing detection which timeout period is set by ZTM1-0 bits (Table 26). Then the AVL and AVR are set to the same value for both channels. The ALC recovery operation is done at a period set by WTM2-0 bits. When zero cross is detected at both channels during the wait period set by WTM2-0 bits, the ALC recovery operation waits until WTM2-0 period and the next recovery operation is done. If ZTM1-0 is longer than WTM2-0 and no zero crossing occurs, the ALC recovery operation is done at a period set by ZTM1-0 bits.

For example, when the current AVOL value is 30H and RGAIN1-0 bits are set to “01”, AVOL is changed to 32H by the auto limiter operation and then the input signal level is gained by 0.75dB (=0.375dB x 2). When the AVOL value exceeds the reference level (REF7-0), the AVOL values are not increased.

When
“ALC recovery waiting counter reset level (LMTH1-0) ≤ Output Signal < ALC limiter detection level (LMTH1-0)”
during the ALC recovery operation, the waiting timer of ALC recovery operation is reset. When
“ALC recovery waiting counter reset level (LMTH1-0) > Output Signal”,
the waiting timer of ALC recovery operation starts.

The ALC operation corresponds to the impulse noise. When the impulse noise is input, the ALC recovery operation becomes faster than a normal recovery operation (Fast Recovery Operation). When large noise is input to microphone instantaneously, the quality of small level in the large noise can be improved by this fast recovery operation. The speed of fast recovery operation is set by RFST1-0 bits (Table 30).

WTM2	WTM1	WTM0		ALC Recovery Operation Waiting Period			
				8kHz	16kHz	44.1kHz	
0	0	0	128/fs	16ms	8ms	2.9ms	Default
0	0	1	256/fs	32ms	16ms	5.8ms	
0	1	0	512/fs	64ms	32ms	11.6ms	
0	1	1	1024/fs	128ms	64ms	23.2ms	
1	0	0	2048/fs	256ms	128ms	46.4ms	
1	0	1	4096/fs	512ms	256ms	92.9ms	
1	1	0	8192/fs	1024ms	512ms	185.8ms	
1	1	1	16384/fs	2048ms	1024ms	371.5ms	

Table 27. ALC Recovery Operation Waiting Period

RGAIN1	RGAIN0	GAIN STEP		
0	0	1 step	0.375dB	Default
0	1	2 step	0.750dB	
1	0	3 step	1.125dB	
1	1	4 step	1.500dB	

Table 28. ALC Recovery GAIN Step

REF7-0	GAIN(dB)	Step	
F1H	+36.0	0.375dB	Default
F0H	+35.625		
EFH	+35.25		
:	:		
E2H	+30.375		
E1H	+30.0		
E0H	+29.625		
:	:		
03H	–53.25		
02H	–53.625		
01H	–54.0		
00H	MUTE		

Table 29. Reference Level at ALC Recovery operation

RFST1 bit	RFST0 bit	Recovery Speed	
0	0	4 times	Default
0	1	8 times	
1	0	16times	
1	1	N/A	

Table 30. Fast Recovery Speed Setting

3. Example of ALC Operation

Table 31 shows the examples of the ALC setting.

Register Name	Comment	fs=8kHz		fs=44.1kHz	
		Data	Operation	Data	Operation
LMTH1-0	Limiter detection Level	01	–4.1dBFS	01	–4.1dBFS
ZELMN	Limiter zero crossing detection	0	Enable	0	Enable
ZTM1-0	Zero crossing timeout period	01	32ms	11	23.2ms
WTM2-0	Recovery waiting period *WTM2-0 bits should be the same or longer data as ZTM1-0 bits.	001	32ms	011	23.2ms
REF7-0	Maximum gain at recovery operation	E1H	+30dB	E1H	+30dB
AVL7-0, AVR7-0	Gain of AVOL	E1H	+30dB	E1H	+30dB
LMAT1-0	Limiter ATT step	00	1 step	00	1 step
RGAIN1-0	Recovery GAIN step	00	1 step	00	1 step
RFST1-0	Fast Recovery Speed	00	4 times	00	4 times
ALC	ALC enable	1	Enable	1	Enable

Table 31. Example of the ALC setting

The following registers should not be changed during the ALC operation. These bits should be changed after the ALC operation is finished by ALC bit = “0” or PMDAC bit = “0”.

- **LMTH1-0, LMAT1-0, WTM2-0, ZTM1-0, RGAIN1-0, REF7-0, ZELMN, RFST1-0**

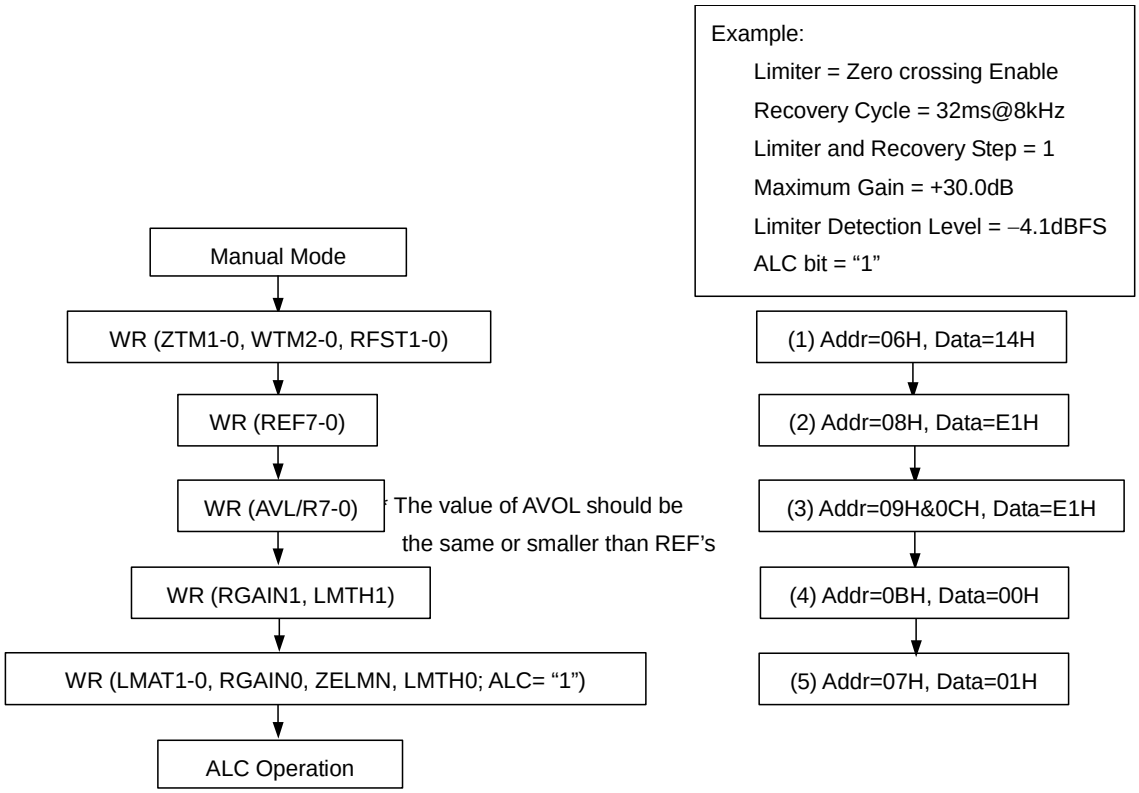

Note : WR : Write

Figure 33. Registers set-up sequence at ALC operation

■ Digital Volume at ALC Block (Manual Mode)

The digital volume at ALC block becomes a manual mode when ALC bit is “0”. This mode is used in the case shown below.

1. After exiting reset state, set-up the registers for the ALC operation (ZTM1-0, LMTH1-0 and etc)
2. When the registers for the ALC operation (Limiter period, Recovery period and etc) are changed.
   For example; when the change of the sampling frequency.

AVL7-0 and AVR7-0 bits set the gain of the volume control at ALC block (Table 32). The AVOL value is changed at zero crossing or timeout. Zero crossing timeout period is set by ZTM1-0 bits.

When ALC is not used, AVL7-0 and AVR7-0 bits should be set to “ 91H” (0dB).

AVL7-0 AVR7-0	GAIN (dB)	Step	
F1H	+36.0	0.375dB	
F0H	+35.625		
EFH	+35.25		
:	:		
E2H	+30.375		
E1H	+30.0		Default
E0H	+29.625		
:	:		
03H	–53.25		
02H	–53.625		
01H	–54		
00H	MUTE		

Table 32. ALC Block Digital Volume Setting

When writing to the AVL7-0 and AVR7-0 bits continuouslly, the control register should be written by an interval more than zero crossing timeout. If not, AVL and AVR are not changed since zero crossing counter is reset at every write operation. If the same register value as the previous write operation is written to AVL and AVR, this write operation is ignored and zero crossing counter is not reset. Therefore, AVL and AVR can be written by an interval less than zero crossing timeout.

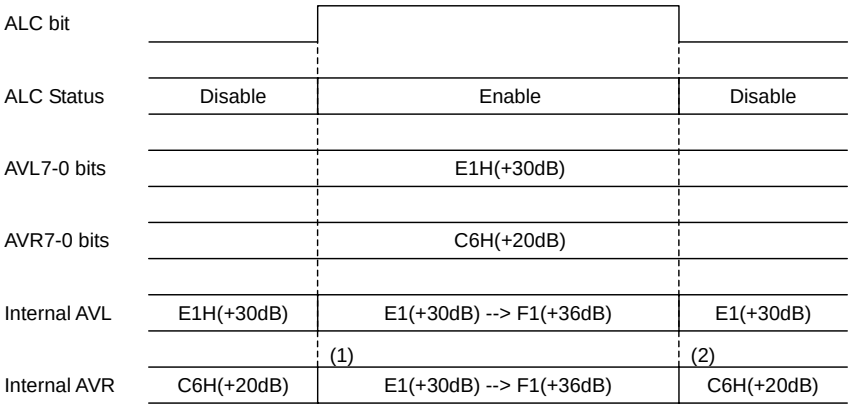

Figure 34. AVOL value during ALC operation

(1) The AVL value becomes the start value if the AVL and AVR are different when the ALC starts. The wait time from ALC bit = “1” to ALC operation start by AVL7-0 bits is at most recovery time (WTM2-0 bits) plus zerocross timeout period (ZTM1-0 bits).
(2) Writing to AVL and AVR registers (09H and 0CH) is ignored during ALC operation. After ALC is disabled, the AVOL changes to the last written data by zero crossing or timeout. When ALC is enabled again, ALC bit should be set to “1” by an interval more than zero crossing timeout period after ALC bit = “0”.

■ De-emphasis Filter

The AK4343 includes the digital de-emphasis filter (tc = 50/15μs) by IIR filter. Setting the DEM1-0 bits enables the de-emphasis filter (Table 33).

DEM1	DEM0	Mode	
0	0	44.1kHz	
0	1	OFF	Default
1	0	48kHz	
1	1	32kHz	

Table 33. De-emphasis Control

■ Bass Boost Function

The BST1-0 bits control the amount of low frequency boost applied to the DAC output signal (Table 34). If the BST1-0 bits are set to "01" (MIN Level), use a 47μF capacitor for AC-coupling. If the boosted signal exceeds full scale, the analog output clips to the full scale. Figure 35 shows the boost frequency response at –20dB signal input.

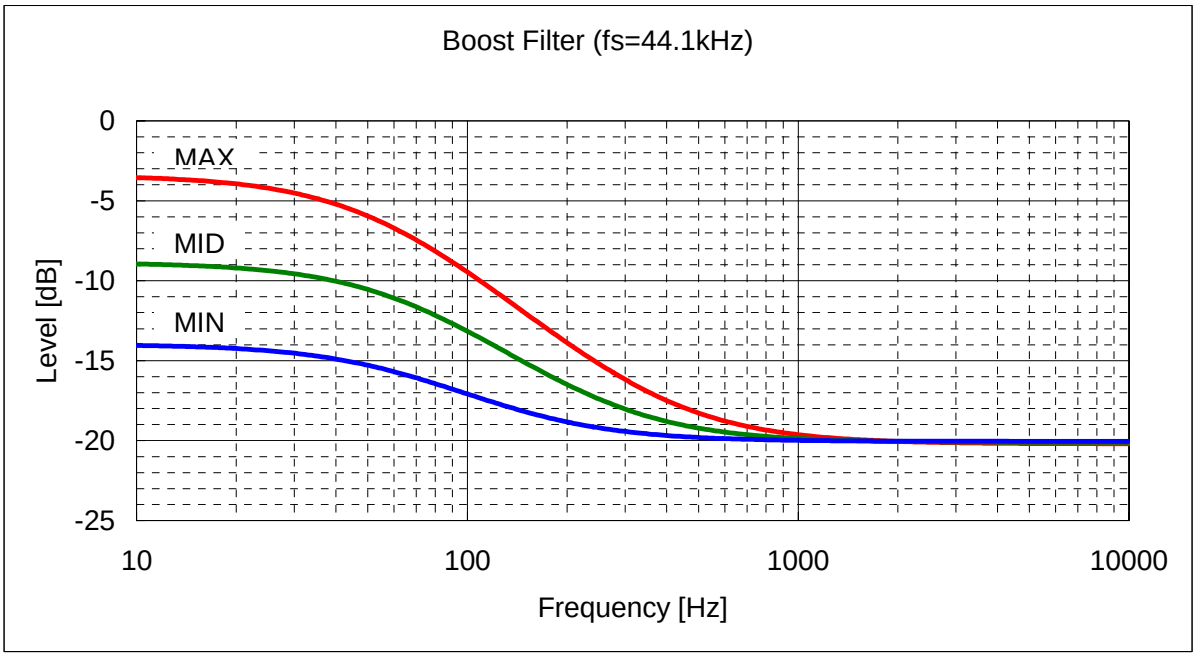

Figure 35. Bass Boost Frequency Response (fs=44.1kHz)

BST1	BST0	Mode	
0	0	OFF	Default
0	1	MIN	
1	0	MID	
1	1	MAX	

Table 34. Bass Boost Control

■ Digital Output Volume

The AK4343 has a digital output volume (256 levels, 0.5dB step, Mute). The volume can be set by the DVL7-0 and DVR7-0 bits. The volume is included in front of a DAC block. The input data of DAC is changed from +12 to –115dB or MUTE. When the DVOLC bit = “1”, the DVL7-0 bits control both Lch and Rch attenuation levels. When the DVOLC bit = “0”, the DVL7-0 bits control Lch level and DVR7-0 bits control Rch level. This volume has a soft transition function. The DVTM bit sets the transition time between set values of DVL/R7-0 bits as either 1061/fs or 256/fs (Table 36). When DVTM bit = “0”, a soft transition between the set values occurs (1062 levels). It takes 1061/fs (=24ms@fs=44.1kHz) from 00H (+12dB) to FFH (MUTE).

DVL/R7-0	Gain	
00H	+12.0dB	
01H	+11.5dB	
02H	+11.0dB	
:	:	
18H	0dB	Default
:	:	
FDH	–114.5dB	
FEH	–115.0dB	
FFH	MUTE (–∞)	

Table 35. Digital Volume Code Table

DVTM bit	Transition time between DVL/R7-0 bits = 00H and FFH			
	Setting	fs=8kHz	fs=44.1kHz	
0	1061/fs	133ms	24ms	Default
1	256/fs	32ms	6ms	

Table 36. Transition Time Setting of Digital Output Volume

■ Soft Mute

Soft mute operation is performed in the digital domain. When the SMUTE bit goes to “1”, the output signal is attenuated by –∞ (“0”) during the cycle set by the DVTM bit. When the SMUTE bit is returned to “0”, the mute is cancelled and the output attenuation gradually changes to the value set by the DVL/R7-0 bits during the cycle set of the DVTM bit. If the soft mute is cancelled within the cycle set by the DVTM bit after starting the operation, the attenuation is discontinued and returned to the value set by the DVL/R7-0 bits. The soft mute is effective for changing the signal source without stopping the signal transmission (Figure 36).

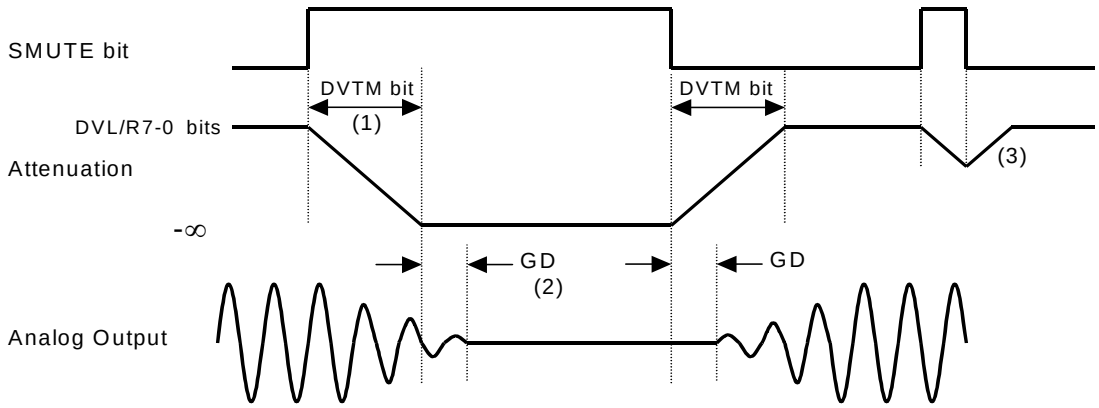

Figure 36. Soft Mute Function

(1) The output signal is attenuated until –∞ (“0”) by the cycle set by the DVTM bit.
(2) Analog output corresponding to digital input has the group delay (GD).
(3) If the soft mute is cancelled within the cycle set by the DVTM bit, the attenuation is discounted and returned to the value set by the DVL/R7-0 bits.

■ Analog Mixing: Stereo Input (LIN2/RIN2, AIN3 bit = “1”: LIN3/RIN3 pins)

When PMAINL2=PMAINR2 bits = “1”, LIN2 and RIN2 pins can be used as stereo line input for analog mixing. When the LINS2 and RINS2 bits are set to “1”, the input signal from the LIN2/RIN2 pins is output to Speaker-Amp. When the LINH2 and RINH2 bits are set to “1”, the input signal from the LIN2/RIN2 pins is output to Headphone-Amp. When the LINL2/RINR2 bits are set to “1”, the input signal from the LIN2/RIN2 pins is output to the stereo line output amplifier.

When AIN3 bit = “1”, MIN and VCOC pins becomes LIN3 and RIN3 pins, respectively. In this case, PLL is not available. When PMAINL3=PMAINR3 bits = “1”, LIN2 and RIN2 pins can be used as stereo line input for analog mixing. When PMMICL=PMMICR=MICL3=MICR3 bits = “1”, analog mixing source is changed from LIN3/RIN3 input to Gain-Amp output signal. When the LINS3 and RINS3 bits are set to “1”, the input signal from the LIN3/RIN3 pins is output to Speaker-Amp. When the LINH3 and RINH3 bits are set to “1”, the input signal from the LIN3/RIN3 pins is output to Headphone-Amp. When the LINL3/RINR3 bits are set to “1”, the input signal from the LIN3/RIN3 pins is output to the stereo line output amplifier.

When the analog mixing is used at MICL3=MICR3 bits = “0”, the input resistance of LIN3/RIN3 pins becomes 30kΩ (typ) at MGAIN1-0 bits = “00” and 20kΩ (typ) at MGAIN1-0 bits = “01”, “10” or “11”, respectively. When the analog mixing is used at MICL3=MICR3 bits = “1”, the input resistance of LIN3/RIN3 pins becomes 60kΩ (typ) at MGAIN1-0 bits = “00” and 30kΩ (typ) at MGAIN1-0 bits = “01”, “10” or “11”, respectively.

Table 37, Table 38, Table 39 and Table 40show the typical gain.

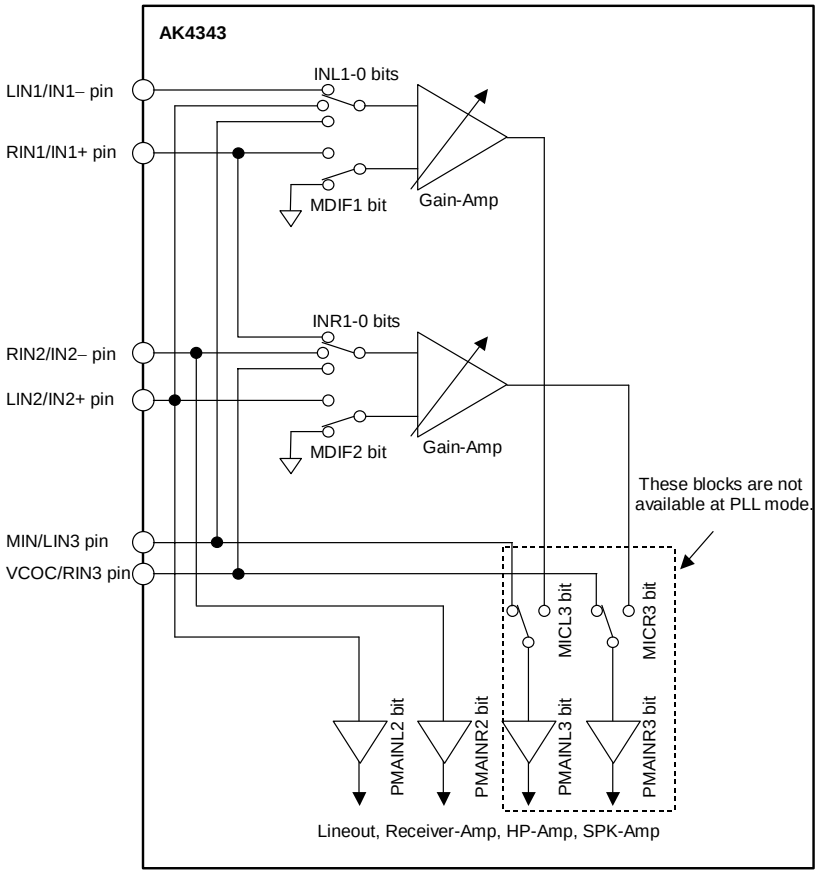

Figure 37. Analog Mixing Circuit

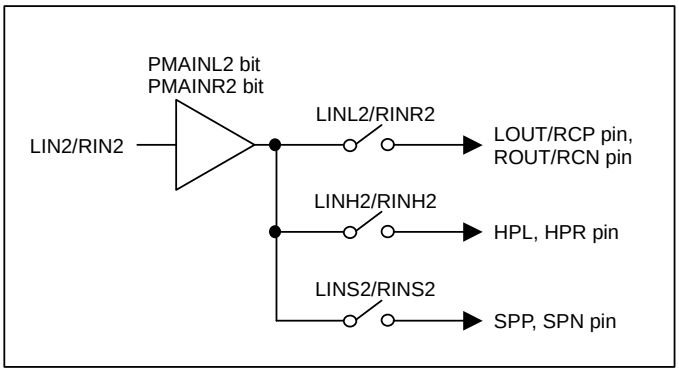

Figure 38. Analog Mixing Circuit (LIN2/RIN2)

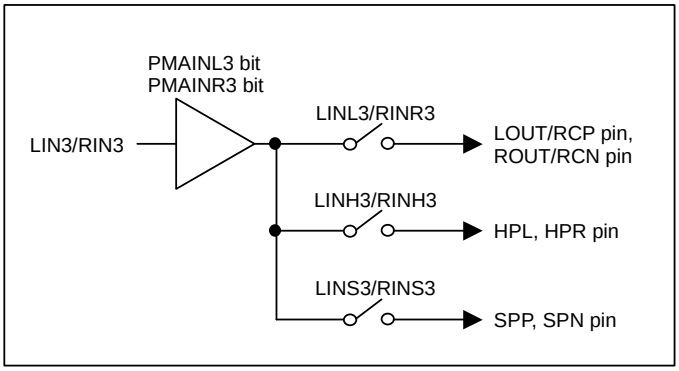

Figure 39. Analog Mixing Circuit (LIN3/RIN3; PLL is not available)

LOVL bit	LIN2/RIN2/LIN3/RIN3 → LOUT/ROUT	
0	0dB	Default
1	+2dB	

Table 37. LIN2/RIN2/LIN3/RIN3 Input → LOUT/ROUT Output Gain (typ)

LOVL bit	LIN2/RIN2/LIN3/RIN3 → RCP/RCN	
0	0dB	Default
1	+2dB	

Table 38. LIN2/RIN2/LIN3/RIN3 Input → RCP/RCN Output Gain (typ)

HPG bit	LIN2/RIN2/LIN3/RIN3 → HPL/HPR	
0	0dB	Default
1	+3.6dB	

Table 39. LIN2/RIN2/LIN3/RIN3 Input → Headphone-Amp Output Gain (typ)

SPKG1-0 bits	LIN2/RIN2/LIN3/RIN3 → SPP/SPN		
	ALC bit = “0”	ALC bit = “1”	
00	–1.59dB	+0.41dB	Default
01	+0.41dB	+2.41dB	
10	+4.63dB	+6.63dB	
11	+6.63dB	+8.63dB	

Table 40. LIN2/RIN2/LIN3/RIN3 Input → Speaker-Amp Output Gain (typ)

■ Analog Mixing: Mono Input

When AIN3 bit = “0”, MIN pin is used as mono input for analog mixing. When the PMMIN bit is set to “1”, the mono input is powered-up. When the MINS bit is set to “1”, the input signal from the MIN pin is output to Speaker-Amp. When the MINH bit is set to “1”, the input signal from the MIN pin is output to Headphone-Amp. When the MINL bit is set to “1”, the input signal from the MIN pin is output to the stereo line output amplifier. The external resister Ri adjusts the signal level of MIN input. Table 41, Table 43 and Table 44 show the typical gain example at R_i = 20kΩ. This gain is in inverse proportion to R_i .

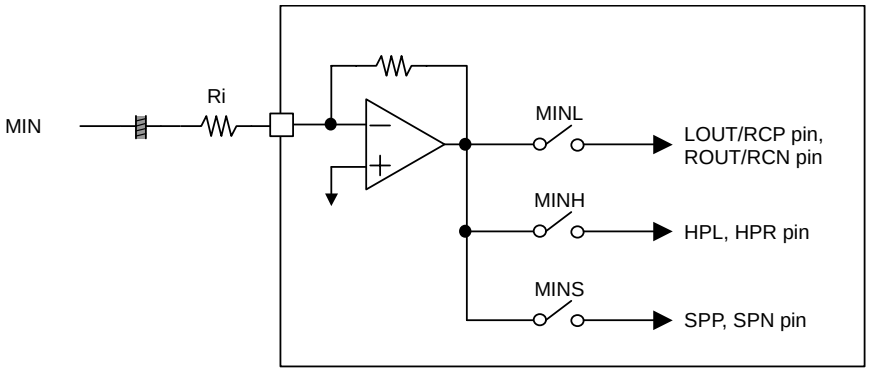

Figure 40. Block Diagram of MIN pin

LOVL bit	MIN → LOUT/ROUT	
0	0dB	Default
1	+2dB	

Table 41. MIN Input → LOUT/ROUT Output Gain (typ) at R_i = 20kΩ

LOVL bit	MIN → RCP/RCN	
0	0dB	Default
1	+2dB	

Table 42. MIN Input → RCP/RCN Output Gain (typ) at R_i = 20kΩ

HPG bit	MIN → HPL/HPR	
0	–20dB	Default
1	–16.4dB	

Table 43. MIN Input → Headphone-Amp Output Gain (typ) at R_i = 20kΩ

SPKG1-0 bits	MIN → SPP/SPN		
	ALC bit = “0”	ALC bit = “1”	
00	+4.43dB	+6.43dB	Default
01	+6.43dB	+8.43dB	
10	+10.65dB	+12.65dB	
11	+12.65dB	+14.65dB	

Table 44. MIN Input → Speaker-Amp Output Gain (typ) at R_i = 20kΩ

■ Stereo Line Output (LOUT/ROUT pins)

When DACL bit is “1”, Lch/Rch signal of DAC is output from the LOUT/ROUT pins which is single-ended. When DACL bit is “0”, output signal is muted and LOUT/ROUT pins output VCOM voltage. The load impedance is 10kΩ (min.). When the PMLO=LOPS bits = “0”, the stereo line output enters power-down mode and the output is pulled-down to AVSS by 100kΩ(typ). When the LOPS bit is “1”, stereo line output enters power-save mode. Pop noise at power-up/down can be reduced by changing PMLO bit at LOPS bit = “1”. In this case, output signal line should be pulled-down to AVSS by 20kΩ after AC coupled as Figure 42. Rise/Fall time is 300ms(max) at C=1μF and AVDD=3.3V. When PMLO=LOPS bits = “1”, stereo line output is in normal operation.

LOVL bit set the gain of stereo line output.

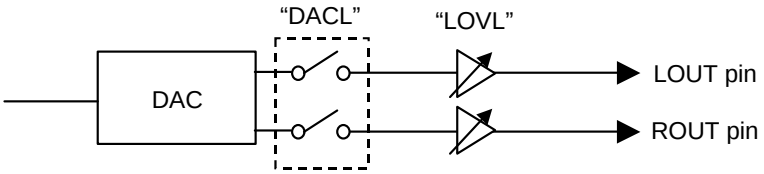

Figure 41. Stereo Line Output

LOPS	PMLO	Mode	LOUT/ROUT pin	
0	0	Power-down	Pull-down to AVSS	Default
	1	Normal Operation	Normal Operation	
1	0	Power-save	Fall down to AVSS	
	1	Power-save	Rise up to VCOM	

Table 45. Stereo Line Output Mode Select (x: Don’t care)

LOVL	Gain	Output Voltage (typ)	
0	+0dB	0.6 x AVDD	Default
1	+2dB	0.757 x AVDD	

Table 46. Stereo Line Output Volume Setting

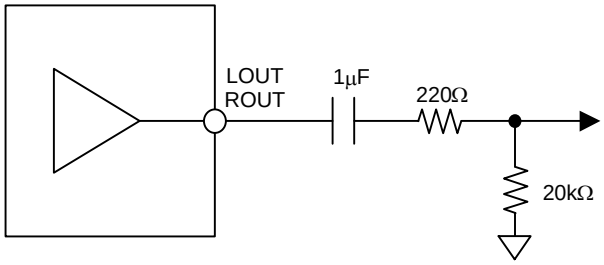

Figure 42. External Circuit for Stereo Line Output (in case of using Pop Reduction Circuit)

<Stereo Line Output Control Sequence (in case of using Pop Reduction Circuit)>

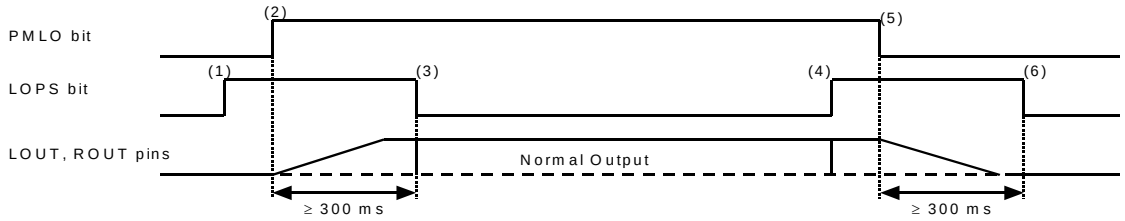

Figure 43. Stereo Line Output Control Sequence (in case of using Pop Reduction Circuit)

(1) Set LOPS bit = “1”. Stereo line output enters the power-save mode.
(2) Set PMLO bit = “1”. Stereo line output exits the power-down mode.
LOUT and ROUT pins rise up to VCOM voltage. Rise time is 200ms (max 300ms) at C=1μF and AVDD=3.3V.
(3) Set LOPS bit = “0” after LOUT and ROUT pins rise up. Stereo line output exits the power-save mode.
Stereo line output is enabled.
(4) Set LOPS bit = “1”. Stereo line output enters power-save mode.
(5) Set PMLO bit = “0”. Stereo line output enters power-down mode.
LOUT and ROUT pins fall down to AVSS. Fall time is 200ms (max 300ms) at C=1μF and AVDD=3.3V.
(6) Set LOPS bit = “0” after LOUT and ROUT pins fall down. Stereo line output exits the power-save mode.

<Analog Mixing Circuit for Stereo Line Output>

When AIN3 bit = “0”, DACL, MINL, LINL2 and RINR2 bits controls each path switch.
MIN path mixing gain is 0dB(typ)@LOVL bit = “0” when the external input resistance is 20kΩ.
LIN2, RIN2 and DAC pathes mixing gain is 0dB(typ)@LOVL bit = “0”.

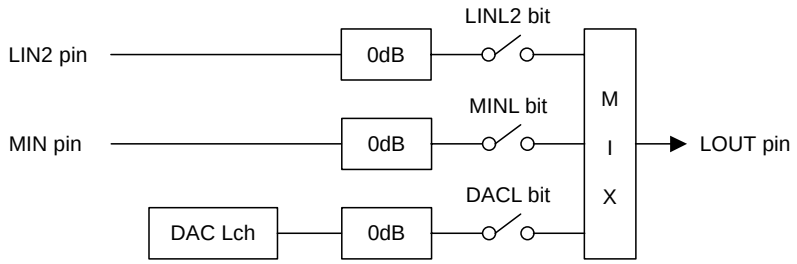

Figure 44. LOUT Mixing Circuit (AIN3 bit = “0”, LOVL bit = “0”)

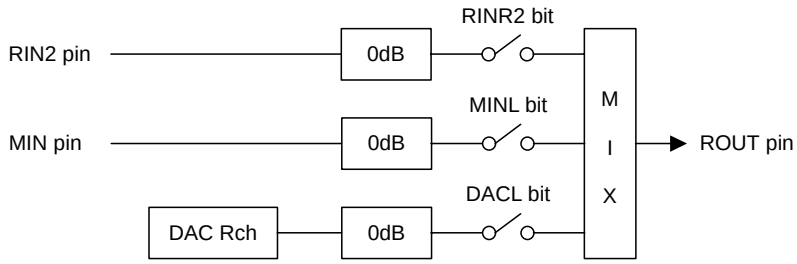

Figure 45. ROUT Mixing Circuit (AIN3 bit = “0”, LOVL bit = “0”)

When AIN3 bit = “1”, DACL, LINL2, RINR2, LINL3, RINR3, MICL3 and MICR3 bits controls each path switch. All pathes mixing gain is 0dB(typ)@LOVL bit = “0”.

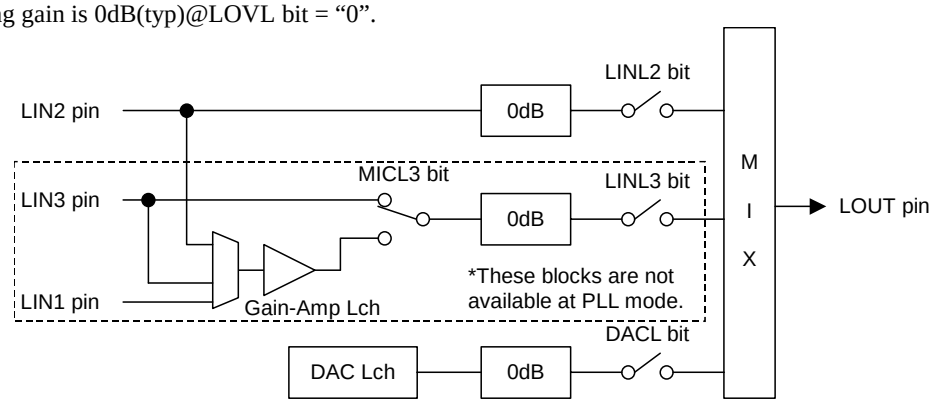

Figure 46. LOUT Mixing Circuit (AIN3 bit = “1”, LOVL bit = “0”)

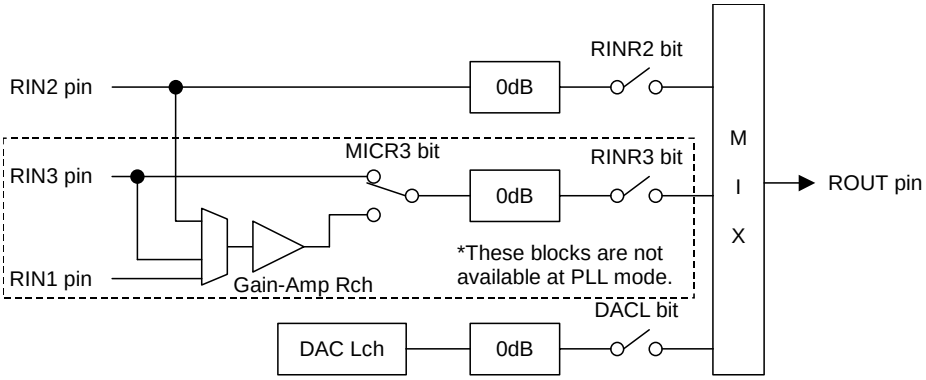

Figure 47. ROUT Mixing Circuit (AIN3 bit = “1”, LOVL bit = “0”)

■ Mono Reveiver Output (RCP/RCN pins)

When RCV bit = “1”, LOUT/ROUT pins become RCP/RCN pins, respectively. Lch/Rch signal of DAC or LIN2/RIN2/LIN3/RIN3 is output from the RCP/RCN pins which is BTL as (L+R)/2 signal. The load impedance is 32Ω (min). When the PMLO bit = “0”, the mono receiver output enters power-down mode and the output is Hi-Z. When the PMLO bit is “1” and LOPS bit is “1”, mono receiver output enters power-save mode. Pop noise at power-up/down can be reduced by changing PMLO bit at LOPS bit = “0”. When PMLO bit = “1” and LOPS bit = “0”, mono receiver output enters in normal operation. LOVL bit set the gain of mono receiver output.

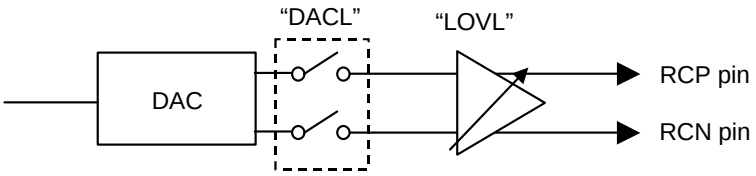

Figure 48. Mono Receiver Output

LOVL	Gain	Output Voltage (typ)	
0	+6dB	0.59 x AVDD @–6dBFS	Default
1	+8dB	0.59 x AVDD @–8dBFS	

Table 47. Mono Receiver Output Volume Setting

PMLO	LOPS	Mode	RCP	RCN	
0	x	Power-down	Hi-Z	Hi-Z	
1	1	Power-save	Hi-Z	VCOM/2	Default
	0	Normal Operation	Normal Operation	Normal Operation	

Table 48. Receiver-Amp Mode Setting (x: Don’t care)

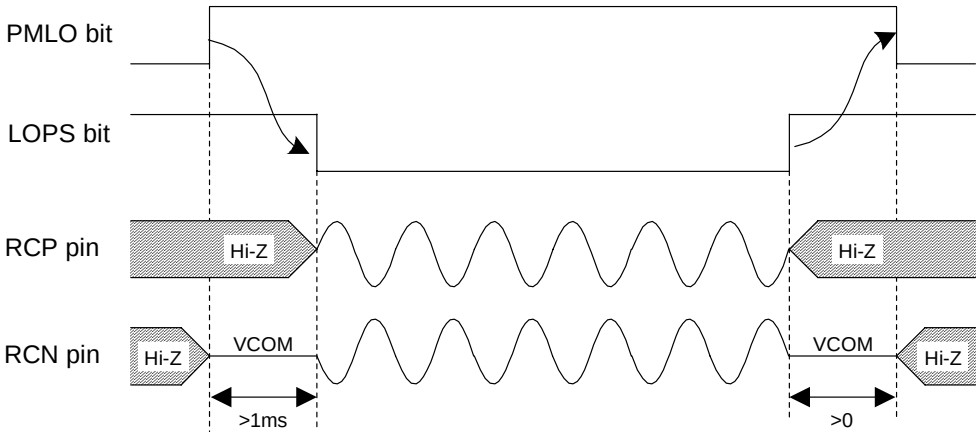

Figure 49. Power-up/Power-down Timing for Receiver-Amp

<Analog Mixing Circuit for Receiver Output>

When AIN3 bit = “0”, DACL, MINL, LINL2 and RINR2 bits controls each path switch.
MIN path mixing gain is +6dB(typ)@LOVL bit = “0” when the external input resistance is 20kΩ.
LIN2, RIN2 and DAC pathes mixing gain is 0dB(typ)@LOVL bit = “0”.

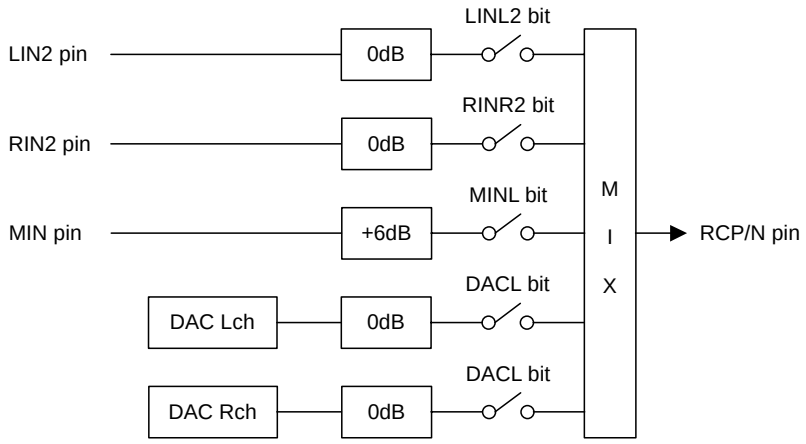

Figure 50. Receiver Mixing Circuit (AIN3 bit = “0”, LOVL bit = “0”)

When AIN3 bit = “1”, DACL, LINL2, RINR2, LINL3, RINR3, MICL3 and MICR3 bits controls each path switch. All pathes mixing gain is 0dB(typ)@LOVL bit = “0”.

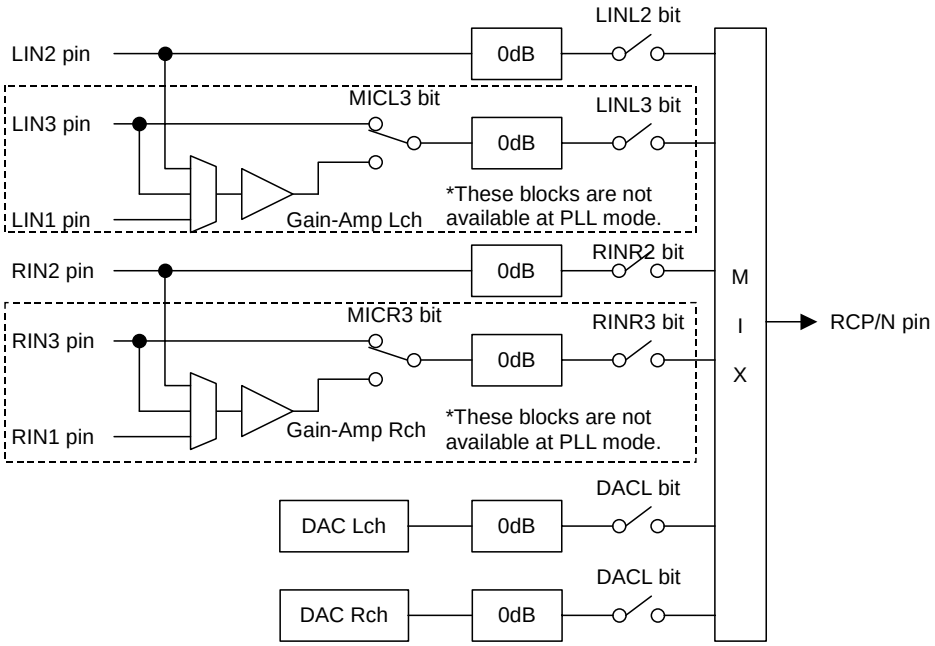

Figure 51. Receiver Mixing Circuit (AIN3 bit = “1”, LOVL bit = “0”)

■ Headphone Output

Power supply voltage for the Headphone-Amp is supplied from the HVDD pin and centered on the HVDD/2 voltage at VBAT bit = “0”. The load resistance is 16Ω (min). HPG bit selects the output voltage (see Table 49).

HPG bit	0	1
Output Voltage [Vpp]	0.6 x AVDD	0.91 x AVDD

Table 49. Headphone-Amp Output Voltage

When the HPMTN bit is “0”, the common voltage of Headphone-Amp falls and the outputs (HPL and HPR pins) go to “L” (HVSS). When the HPMTN bit is “1”, the common voltage rises to HVDD/2 at VBAT bit = “0”. A capacitor between the MUTET pin and ground reduces pop noise at power-up. Rise/Fall time constant is in proportional to HVDD voltage and the capacitor at MUTET pin.

[Example]: A capacitor between the MUTET pin and ground = 1.0μF, HVDD=3.3V:
Rise/fall time constant: τ = 100ms(typ), 250ms(max)
Time until the common goes to HVSS when HPMTN bit = “1” → “0”: 500ms(max)

When PMHPL and PMHPR bits are “0”, the Headphone-Amp is powered-down, and the outputs (HPL and HPR pins) go to “L” (HVSS).

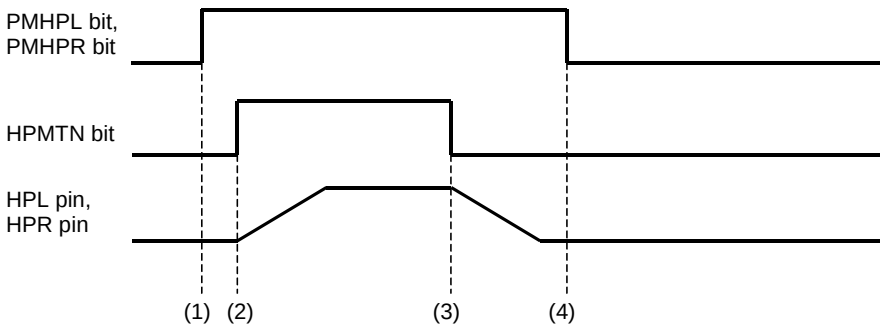

Figure 52. Power-up/Power-down Timing for Headphone-Amp

(1) Headphone-Amp power-up (PMHPL, PMHPR bit = “1”). The outputs are still HVSS.
(2) Headphone-Amp common voltage rises up (HPMTN bit = “1”). Common voltage of Headphone-Amp is rising.
(3) Headphone-Amp common voltage falls down (HPMTN bit = “0”). Common voltage of Headphone-Amp is falling.
(4) Headphone-Amp power-down (PMHPL, PMHPR bit = “0”). The outputs are HVSS. If the power supply is switched off or Headphone-Amp is powered-down before the common voltage goes to HVSS, some POP noise occurs.

When BOOST=OFF, the cut-off frequency (fc) of Headphone-Amp depends on the external resistor and capacitor. This fc can be shifted to lower frequency by using bass boost function. Table 50 shows the cut off frequency and the output power for various resistor/capacitor combinations. The headphone impedance R_L is 16Ω. Output powers are shown at HVDD = 2.7, 3.0 and 3.3V. The output voltage of headphone is 0.6 x AVDD (Vpp).

When an external resistor R is smaller than 12Ω, put an oscillation prevention circuit (0.22μF±20% capacitor and 10Ω±20% resistor) because it has the possibility that Headphone-Amp oscillates.

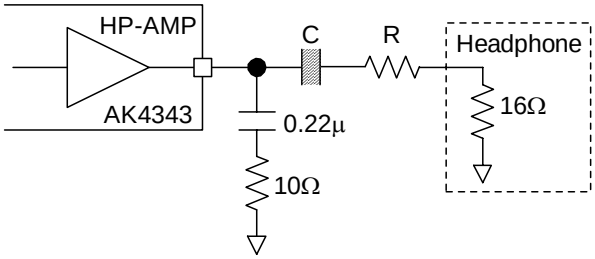

Figure 53. External Circuit Example of Headphone

HPG bit	R [Ω]	C [μF]	fc [Hz] BOOST =OFF	fc [Hz] BOOST =MIN fs=44.1kHz	Output Power [mW]@0dBFS		
					HVDD=3.0V AVDD=3.0V	HVDD=3.3V AVDD=3.3V	HVDD=5V AVDD=3.3V
0	0	220	45	17	25.3	30.6	30.6
		100	100	43			
	6.8	100	70	28	12.5	15.1	15.1
		47	149	78			
	16	100	50	19	6.3	7.7	7.7
		47	106	47			
1	0	220	45	17	51 (Note 39)	62 (Note 39)	70
		100	100	43			
	100	22	62	25	1.1	1.3	1.3
		10	137	69			

Table 50. External Circuit Example
Note 38. Output power at 16Ω load.
Note 39. Output signal is clipped.

<Headphone-Amp PSRR>

When HVDD is directly supplied from the battery in the mobile phone system, RF noise may influences headphone output performance. When VBAT bit is set to “1”, HP-Amp PSRR for the noise applied to HVDD is improved. In this case, HP-Amp common voltage is 0.64 x AVDD (typ). When AVDD is 3.3V, common voltage is 2.1V. Therefore, when HVDD voltage becomes lower than 4.2V, the output signal will be clipped easily.

VBAT bit	0	1
Common Voltage [V]	0.5 x HVDD	0.64 x AVDD

Table 51. HP-Amp Common Voltage

<Analog Mixing Circuit for Headphone Output>

When AIN3 bit = “0”, DACH, MINH, LINH2 and RINH2 bits controls each path switch.
MIN path mixing gain is –20dB(typ)@HPG bit = “0” when the external input resistance is 20kΩ.
LIN2, RIN2 and DAC pathes mixing gain is 0dB(typ)@HPG bit = “0”.

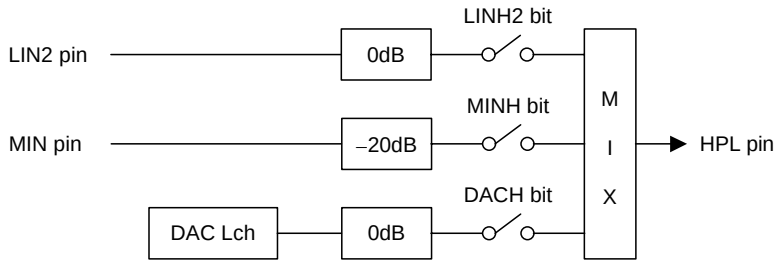

Figure 54. HPL Mixing Circuit (AIN3 bit = “0”, HPG bit = “0”)

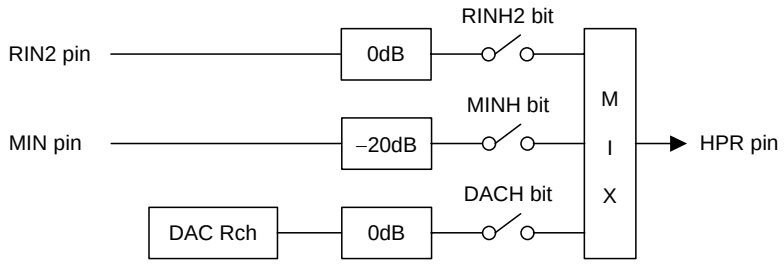

Figure 55. HPR Mixing Circuit (AIN3 bit = “0”, HPG bit = “0”)

When AIN3 bit = “1”, DACH, LINH2, RINH2, LINH3, RINH3, MICL3 and MICR3 bits controls each path switch. All pathes mixing gain is 0dB(typ)@HPG bit = “0”

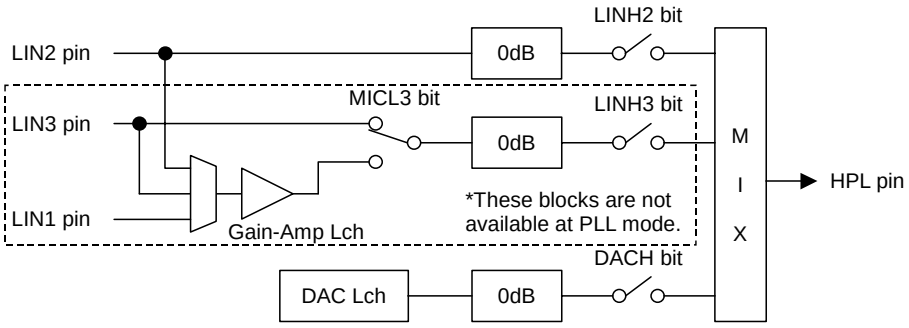

Figure 56. HPL Mixing Circuit (AIN3 bit = “1”, HPG bit = “0”)

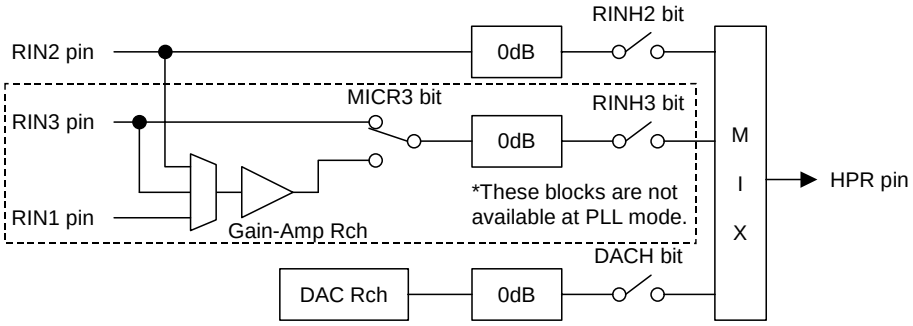

Figure 57. HPR Mixing Circuit (AIN3 bit = “1”, HPG bit = “0”)

■ Speaker Output

Power supply for Speaker-Amp (HVDD) is 2.6V to 5.25V.

Speaker Type	Dynamic Speaker	Piezo (Ceramic) Speaker
Load Resistance (min)	8Ω	50Ω
Load Capacitance (max)	30pF	3μF

Note 19. Load impedance is total impedance of series resistance (Rseries) and piezo speaker impedance at 1kHz in Figure 58. Load capacitance is capacitance of piezo speaker. When piezo speaker is used, 10Ω or more series resistors should be connected at both SPP and SPN pins, respectively.

Table 52. Speaker Type and Power Supply Range

The DAC or LIN2/RIN2/LIN3/RIN3 signal is input to the Speaker-amp as [(L+R)/2]. The Speaker-amp is mono and BTL output. The gain is set by SPKG1-0 bits. Output level depends on AVDD voltage and SPKG1-0 bits.

SPKG1-0 bits	Gain		
	ALC bit = “0”	ALC bit = “1”	
00	+4.43dB	+6.43dB	Default
01	+6.43dB	+8.43dB	
10	+10.65dB	+12.65dB	
11	+12.65dB	+14.65dB	

Table 53. SPK-Amp Gain

AVDD	HVDD	SPKG1-0 bits	SPK-Amp Output (DAC Input = 0dBFS)	
			ALC bit = “0”	ALC bit = “1” (LMTH1-0 bits = “00”)
3.3V	3.3V	00	3.30Vpp	3.11Vpp
		01	4.15Vpp (Note 40)	3.92Vpp
		10	6.75Vpp (Note 40)	6.37Vpp (Note 40)
		11	8.50Vpp (Note 40)	8.02Vpp (Note 40)
	5.0V	00	3.30Vpp	3.11Vpp
		01	4.15Vpp	3.92Vpp
		10	6.75Vpp (Note 40)	6.37Vpp (Note 40)
		11	8.50Vpp (Note 40)	8.02Vpp (Note 40)

Note 40. The output level is calculated by assuming that output signal is not clipped. In actual case, output signal may be clipped when DAC outputs 0dBFS signal. DAC output level should be set to lower level by setting digital volume so that Speaker-Amp output level is 4.0Vpp (HVDD=3.3V) or 6.0V (HVDD=5V) or less and output signal is not clipped.

Table 54. SPK-Amp Output Level

<ALC Operation Example of Speaker Playback>

Register Name	Comment	fs=44.1kHz	
		Data	Operation
LMTH1-0	Limiter detection Level	00	–2.5dBFS
ZELMN	Limiter zero crossing detection	0	Enable
ZTM1-0	Zero crossing timeout period	10	11.6ms
WTM2-0	Recovery waiting period *WTM2-0 bits should be the same or longer data as ZTM1-0 bits	11	23.2ms
REF7-0	Maximum gain at recovery operation	C1H	+18dB
AVL7-0, AVR7-0	Gain of AVOL	91H	0dB
LMAT1-0	Limiter ATT step	00	1 step
RGAIN1-0	Recovery GAIN step	00	1 step
ALC	ALC enable	1	Enable

Table 55. ALC Operation Example of Speaker Playback

<Caution for using Piezo Speaker>

When a piezo speaker is used, resistances more than 10Ω should be inserted between SPP/SPN pins and speaker in series, respectively, as shown in Figure 58. Zener diodes should be inserted between speaker and GND as shown in Figure 58, in order to protect SPK-Amp of AK4343 from the power that the piezo speaker outputs when the speaker is pressured. Zener diodes of the following zener voltage should be used.

0.92 x HVDD ≤ Zener voltage of zener diodo (ZD in Figure 58) ≤ HVDD+0.3V
Ex) In case of HVDD = 5.0V: 4.6V ≤ ZD ≤ 5.3V
For example, zener diode which zener voltage is 5.1V(Min: 4.97V, Max: 5.24V) can be used.

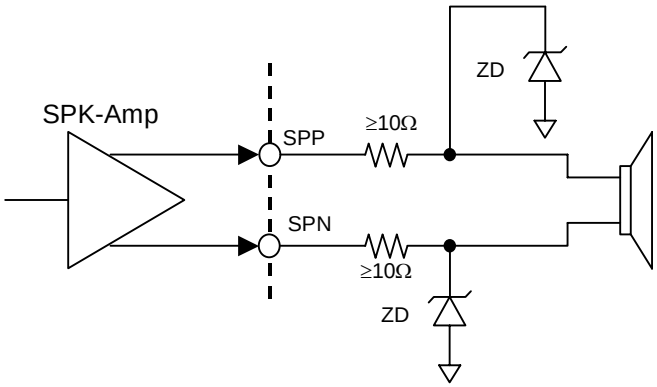

Figure 58. Speaker Output Circuit (Load Capacitance > 30pF)

<Speaker-Amp Control Sequence>

Speaker-Amp is powered-up/down by PMSPK bit. When PMSPK bit is “0”, both SPP and SPN pin are in Hi-Z state. When PMSPK bit is “1” and SPPSN bit is “0”, the Speaker-Amp enters power-save mode. In this mode, SPP pin is placed in Hi-Z state and SPN pin goes to HVDD/2 voltage. Power-save mode can reduce the pop noise at power-up and power-down.

PMSPK	SPPSN	Mode	SPP	SPN	
0	x	Power-down	Hi-Z	Hi-Z	Default
1	0	Power-save	Hi-Z	HVDD/2	
	1	Normal Operation	Normal Operation	Normal Operation	

Table 56. Speaker-Amp Mode Setting (x: Don’t care)

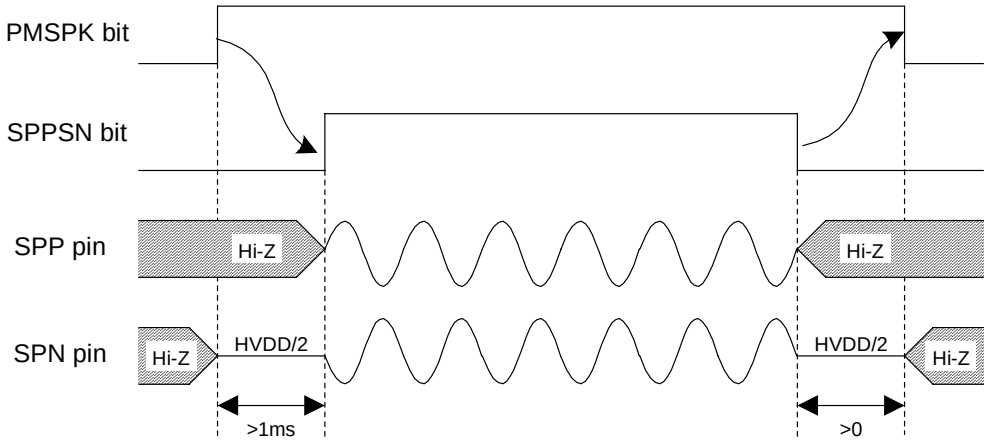

Figure 59. Power-up/Power-down Timing for Speaker-Amp

<Analog Mixing Circuit for Speaker Output>

When AIN3 bit = “0”, DACS, MINS, LINS2 and RINS2 bits controls each path switch.
MIN path mixing gain is +4.43dB(typ)@SPKG bits = “00” & ALC bit = “0” when the external input resistance is 20kΩ.
LIN2, RIN2 and DAC pathes mixing gain is –1.57dB(typ)@SPKG bits = “00” & ALC bit = “0”.

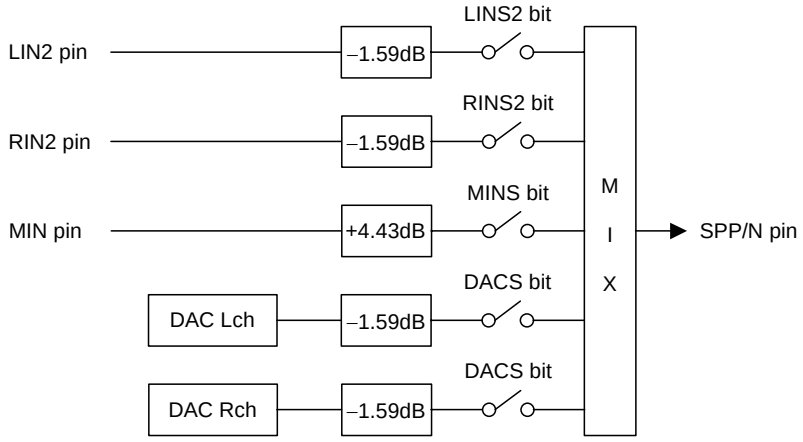

Figure 60. Speaker Mixing Circuit (AIN3 bit = “0”, SPKG1-0 bits = “00”, ALC bit = “0”)

When AIN3 bit = “1”, DACS, LINS2, RINS2, LINS3, RINS3, MICL3 and MICR3 bits controls each path switch. All pathes mixing gain is 0dB(typ)@HPG bit = “0”.

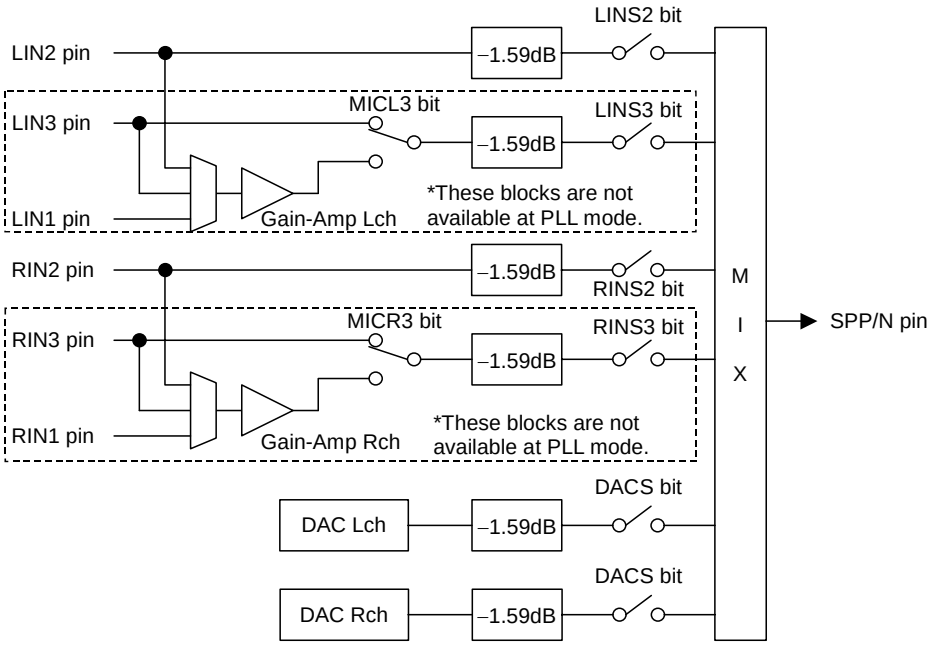

Figure 61. Speaker Mixing Circuit (AIN3 bit = “1”, SPKG bits = “00”, ALC bit = “0”)

■ Serial Control Interface

(1) 3-wire Serial Control Mode (I2C pin = “L”)

Internal registers may be written by using the 3-wire µP interface pins (CSN, CCLK and CDTI). The data on this interface consists of a 1-bit Chip address (Fixed to “1”), Read/Write (Fixed to “1”), Register address (MSB first, 6bits) and Control data (MSB first, 8bits). Each bit is clocked in on the rising edge (“↑”) of CCLK. Address and data are latched on the 16th CCLK rising edge (“↑”) after CSN falling edge(“↓”). Clock speed of CCLK is 5MHz (max). The value of internal registers are initialized by PDN pin = “L”.

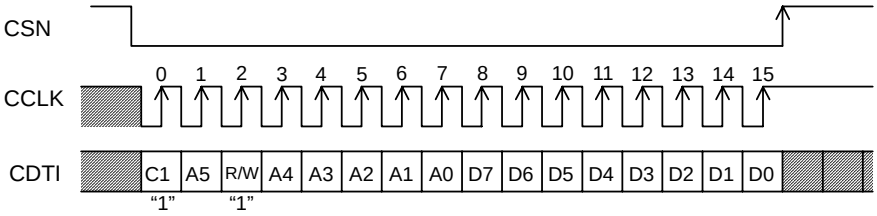

C1: Chip Address; Fixed to “1”
R/W: READ/WRITE (“1”: WRITE, “0”: READ); Fixed to “1”
A5-A0: Register Address
D7-D0: Control data

Figure 62. Serial Control I/F Timing

(2) I²C-bus Control Mode (I2C pin = "H")

The AK4343 supports the fast-mode I²C-bus (max: 400kHz). Pull-up resistors at SDA and SCL pins should be connected to (DVDD+0.3)V or less voltage.

(2)-1. WRITE Operations

Figure 63 shows the data transfer sequence for the I²C-bus mode. All commands are preceded by a START condition. A HIGH to LOW transition on the SDA line while SCL is HIGH indicates a START condition (Figure 69). After the START condition, a slave address is sent. This address is 7 bits long followed by an eighth bit that is a data direction bit (R/W). The most significant six bits of the slave address are fixed as "001001". The next bit is CAD0 (device address bit). This bit identifies the specific device on the bus. The hard-wired input pin (CAD0 pin) sets these device address bits (Figure 64). If the slave address matches that of the AK4343, the AK4343 generates an acknowledge and the operation is executed. The master must generate the acknowledge-related clock pulse and release the SDA line (HIGH) during the acknowledge clock pulse (Figure 70). A R/W bit value of "1" indicates that the read operation is to be executed. A "0" indicates that the write operation is to be executed.

The second byte consists of the control register address of the AK4343. The format is MSB first, and those most significant 2-bits are fixed to zeros (Figure 65). The data after the second byte contains control data. The format is MSB first, 8bits (Figure 66). The AK4343 generates an acknowledge after each byte has been received. A data transfer is always terminated by a STOP condition generated by the master. A LOW to HIGH transition on the SDA line while SCL is HIGH defines a STOP condition (Figure 69).

The AK4343 can perform more than one byte write operation per sequence. After receipt of the third byte the AK4343 generates an acknowledge and awaits the next data. The master can transmit more than one byte instead of terminating the write cycle after the first data byte is transferred. After receiving each data packet the internal 6-bit address counter is incremented by one, and the next data is automatically taken into the next address. If the address exceeds 24H prior to generating a stop condition, the address counter will "roll over" to 00H and the previous data will be overwritten.

The data on the SDA line must remain stable during the HIGH period of the clock. The HIGH or LOW state of the data line can only change when the clock signal on the SCL line is LOW (Figure 71) except for the START and STOP conditions.

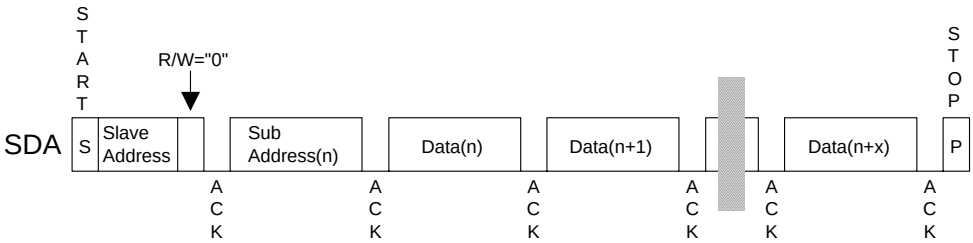

Figure 63. Data Transfer Sequence at the I²C-Bus Mode

0	0	1	0	0	1	CAD0	R/W

(Those CAD1/0 should match with CAD1/0 pins)

Figure 64. The First Byte

0	0	A5	A4	A3	A2	A1	A0

Figure 65. The Second Byte

D7	D6	D5	D4	D3	D2	D1	D0

Figure 66. Byte Structure after the second byte

(2)-2. READ Operations

Set the R/W bit = “1” for the READ operation of the AK4343. After transmission of data, the master can read the next address’s data by generating an acknowledge instead of terminating the write cycle after the receipt of the first data word. After receiving each data packet the internal 6-bit address counter is incremented by one, and the next data is automatically taken into the next address. If the address exceeds 24H prior to generating a stop condition, the address counter will “roll over” to 00H and the data of 00H will be read out.

The AK4343 supports two basic read operations: CURRENT ADDRESS READ and RANDOM ADDRESS READ.

(2)-2-1. CURRENT ADDRESS READ

The AK4343 contains an internal address counter that maintains the address of the last word accessed, incremented by one. Therefore, if the last access (either a read or write) were to address n, the next CURRENT READ operation would access data from the address n+1. After receipt of the slave address with R/W bit set to “1”, the AK4343 generates an acknowledge, transmits 1-byte of data to the address set by the internal address counter and increments the internal address counter by 1. If the master does not generate an acknowledge to the data but instead generates a stop condition, the AK4343 ceases transmission.

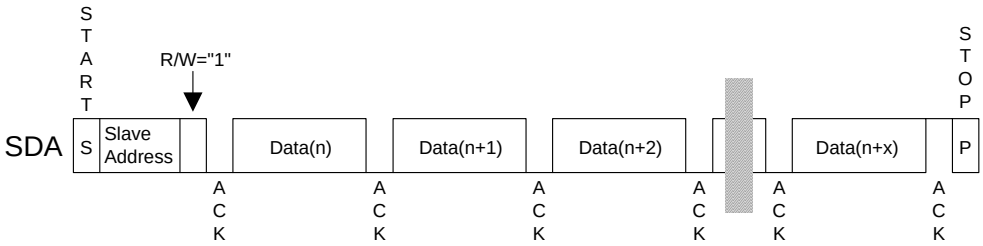

Figure 67. CURRENT ADDRESS READ

(2)-2-2. RANDOM ADDRESS READ

The random read operation allows the master to access any memory location at random. Prior to issuing the slave address with the R/W bit set to “1”, the master must first perform a “dummy” write operation. The master issues a start request, a slave address (R/W bit = “0”) and then the register address to read. After the register address is acknowledged, the master immediately reissues the start request and the slave address with the R/W bit set to “1”. The AK4343 then generates an acknowledge, 1 byte of data and increments the internal address counter by 1. If the master does not generate an acknowledge to the data but instead generates a stop condition, the AK4343 ceases transmission.

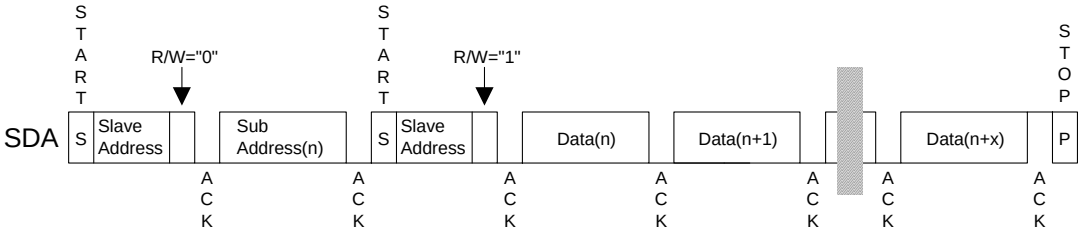

Figure 68. RANDOM ADDRESS READ

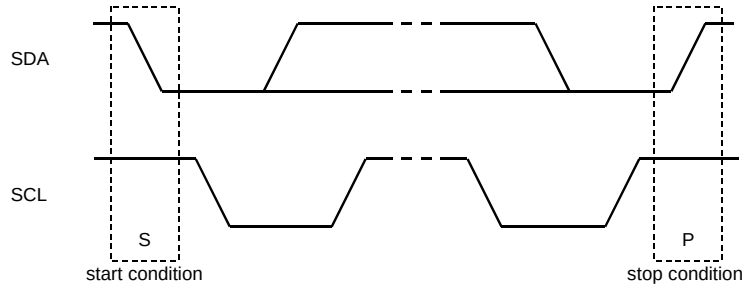

Figure 69. START and STOP Conditions

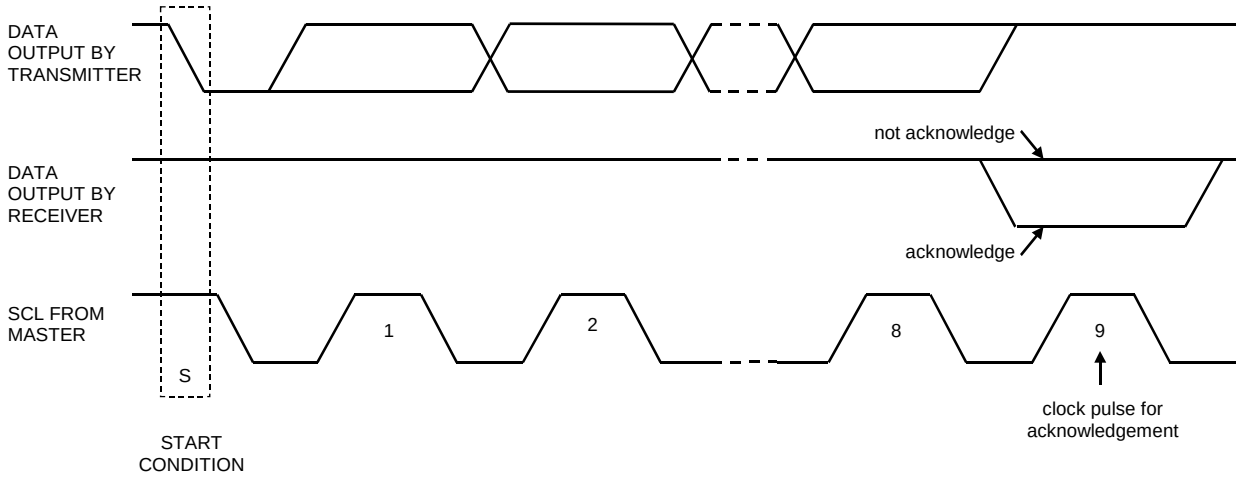

Figure 70. Acknowledge on the I^2C-Bus

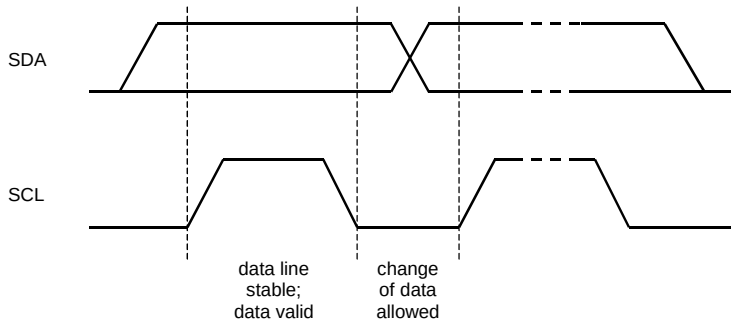

Figure 71. Bit Transfer on the I^2C-Bus

■ Register Map

Addr	Register Name	D7	D6	D5	D4	D3	D2	D1	D0
00H	Power Management 1	0	PMVCM	PMMIN	PMSPK	PMLO	PMDAC	0	0
01H	Power Management 2	0	HPMTN	PMHPL	PMHPR	M/S	0	MCKO	PMPLL
02H	Signal Select 1	SPPSN	MINS	DACS	DACL	0	0	0	MGAIN0
03H	Signal Select 2	LOVL	LOPS	MGAIN1	SPKG1	SPKG0	MINL	0	0
04H	Mode Control 1	PLL3	PLL2	PLL1	PLL0	BCKO	0	DIF1	DIF0
05H	Mode Control 2	PS1	PS0	FS3	MSBS	BCKP	FS2	FS1	FS0
06H	Timer Select	DVTM	WTM2	ZTM1	ZTM0	WTM1	WTM0	RFST1	RFST0
07H	ALC Mode Control 1	0	0	ALC	ZELMN	LMAT1	LMAT0	RGAIN0	LMTH0
08H	ALC Mode Control 2	REF7	REF6	REF5	REF4	REF3	REF2	REF1	REF0
09H	Lch Input Volume Control	AVL7	AVL6	AVL5	AVL4	AVL3	AVL2	AVL1	AVL0
0AH	Lch Digital Volume Control	DVL7	DVL6	DVL5	DVL4	DVL3	DVL2	DVL1	DVL0
0BH	ALC Mode Control 3	RGAIN1	LMTH1	0	0	0	0	VBAT	0
0CH	Rch Input Volume Control	AVR7	AVR6	AVR5	AVR4	AVR3	AVR2	AVR1	AVR0
0DH	Rch Digital Volume Control	DVR7	DVR6	DVR5	DVR4	DVR3	DVR2	DVR1	DVR0
0EH	Mode Control 3	0	0	SMUTE	DVOLC	BST1	BST0	DEM1	DEM0
0FH	Mode Control 4	0	0	0	0	AVOLC	HPM	MINH	DACH
10H	Power Management 3	INR1	INL1	HPG	MDIF2	MDIF1	INR0	INL0	0
11H	Digital Filter Select	GN1	GN0	0	FIL1	EQ	FIL3	0	0
12H	FIL3 Co-efficient 0	F3A7	F3A6	F3A5	F3A4	F3A3	F3A2	F3A1	F3A0
13H	FIL3 Co-efficient 1	F3AS	0	F3A13	F3A12	F3A11	F3A10	F3A9	F3A8
14H	FIL3 Co-efficient 2	F3B7	F3B6	F3B5	F3B4	F3B3	F3B2	F3B1	F3B0
15H	FIL3 Co-efficient 3	0	0	F3B13	F3B12	F3B11	F3B10	F3B9	F3B8
16H	EQ Co-efficient 0	EQA7	EQA6	EQA5	EQA4	EQA3	EQA2	EQA1	EQA0
17H	EQ Co-efficient 1	EQA15	EQA14	EQA13	EQA12	EQA11	EQA10	EQA9	EQA8
18H	EQ Co-efficient 2	EQB7	EQB6	EQB5	EQB4	EQB3	EQB2	EQB1	EQB0
19H	EQ Co-efficient 3	0	0	EQB13	EQB12	EQB11	EQB10	EQB9	EQB8
1AH	EQ Co-efficient 4	EQC7	EQC6	EQC5	EQC4	EQC3	EQC2	EQC1	EQC0
1BH	EQ Co-efficient 5	EQC15	EQC14	EQC13	EQC12	EQC11	EQC10	EQC9	EQC8
1CH	FIL1 Co-efficient 0	F1A7	F1A6	F1A5	F1A4	F1A3	F1A2	F1A1	F1A0
1DH	FIL1 Co-efficient 1	F1AS	0	F1A13	F1A12	F1A11	F1A10	F1A9	F1A8
1EH	FIL1 Co-efficient 2	F1B7	F1B6	F1B5	F1B4	F1B3	F1B2	F1B1	F1B0
1FH	FIL1 Co-efficient 3	0	0	F1B13	F1B12	F1B11	F1B10	F1B9	F1B8
20H	Power Management 4	0	0	PMAINR3	PMAINL3	PMAINR2	PMAINL2	PMMICR	PMMICL
21H	Mode Control 5	0	0	MICR3	MICL3	0	0	AIN3	RCV
22H	Lineout Mixing Select	0	0	0	0	RINR3	LINL3	RINR2	LINL2
23H	HP Mixing Select	0	0	0	0	RINH3	LINH3	RINH2	LINH2
24H	SPK Mixing Select	0	0	0	0	RINS3	LINS3	RINS2	LINS2

Note 41. PDN pin = “L” resets the registers to their default values.
Note 42. Unused bits must contain a “0” value.

■ Register Definitions

Addr	Register Name	D7	D6	D5	D4	D3	D2	D1	D0
00H	Power Management 1	0	PMVCM	PMMIN	PMSPK	PMLO	PMDAC	0	0
Default		0	0	0	0	0	0	0	0

PMDAC: DAC Power Management
0: Power-down (Default)
1: Power-up

PMLO: Stereo Line Out Power Management
0: Power-down (Default)
1: Power-up

PMSPK: Speaker-Amp Power Management
0: Power-down (Default)
1: Power-up

PMMIN: MIN Input Power Management
0: Power-down (Default)
1: Power-up
PMMIN or PMAINL3 bit should be set to “1” for playback.

PMVCM: VCOM Power Management
0: Power-down (Default)
1: Power-up
When any blocks are powered-up, the PMVCM bit must be set to “1”. PMVCM bit can be set to “0” only when all power management bits of 00H, 01H, 02H, 10H, 20H and MCKO bits are “0”.

Each block can be powered-down respectively by writing “0” in each bit of this address. When the PDN pin is “L”, all blocks are powered-down regardless as setting of this address. In this case, register is initialized to the default value.

When all power management bits are “0” in the 00H, 01H, 02H and 20H addresses and MCKO bit is “0”, all blocks are powered-down. The register values remain unchanged.

When DAC is not used, external clocks may not be present. When DAC is used, external clocks must always be present.

Addr	Register Name	D7	D6	D5	D4	D3	D2	D1	D0
01H	Power Management 2	0	HPMTN	PMHPL	PMHPR	M/S	0	MCKO	PMPLL
Default		0	0	0	0	0	0	0	0

PMPLL: PLL Power Management
0: EXT Mode and Power-Down (Default)
1: PLL Mode and Power-up

MCKO: Master Clock Output Enable
0: Disable: MCKO pin = “L” (Default)
1: Enable: Output frequency is selected by PS1-0 bits.

M/S: Master / Slave Mode Select
0: Slave Mode (Default)
1: Master Mode

PMHPR: Headphone-Amp Rch Power Management
0: Power-down (Default)
1: Power-up

PMHPL: Headphone-Amp Lch Power Management
0: Power-down (Default)
1: Power-up

HPMTN: Headphone-Amp Mute Control
0: Mute (Default)
1: Normal operation

Addr	Register Name	D7	D6	D5	D4	D3	D2	D1	D0
02H	Signal Select 1	SPPSN	MINS	DACS	DACL	0	0	0	MGAIN0
Default		0	0	0	0	0	0	0	1

MGAIN1-0: Input Gain Control (See Table 22)
MGAIN1 bit is D5 bit of 03H.

DACL: Switch Control from DAC to Stereo Line Output or Receiver Output
0: OFF (Default)
1: ON
When PMLO bit is “1”, DACL bit is enabled. When PMLO bit is “0”, the LOUT/ROUT pins go to AVSS.

DACS: Switch Control from DAC to Speaker-Amp
0: OFF (Default)
1: ON
When DACS bit is “1”, DAC output signal is input to Speaker-Amp.

MINS: Switch Control from MIN pin to Speaker-Amp
0: OFF (Default)
1: ON
When MINS bit is “1”, mono signal is input to Speaker-Amp.

SPPSN: Speaker-Amp Power-Save Mode
0: Power-Save Mode (Default)
1: Normal Operation
When SPPSN bit is “0”, Speaker-Amp is in power-save mode. In this mode, SPP pin goes to Hi-Z and SPN pin is outputs HVDD/2 voltage. When PMSPK bit = “1”, SPPSN bit is enabled.

Addr	Register Name	D7	D6	D5	D4	D3	D2	D1	D0
03H	Signal Select 2	LOVL	LOPS	MGAIN1	SPKG1	SPKG0	MINL	0	0
Default		0	0	0	0	0	0	0	0

MINL: Switch Control from MIN pin to Stereo Line Output or Receiver Output
0: OFF (Default)
1: ON
When PMLO bit is “1”, MINL bit is enabled. When PMLO bit is “0”, the LOUT/ROUT pins go to AVSS.

SPKG1-0: Speaker-Amp Output Gain Select (See Table 53)

MGAIN1: Input Gain Control (See Table 22)

LOPS: Stereo Line Output Power-Save Mode
0: Normal Operation (Default)
1: Power-Save Mode

LOVL: Stereo Line Output / Receiver Output Gain Select (See Table 46, Table 47)
0: 0dB/+6dB (Default)
1: +2dB/+8dB

Addr	Register Name	D7	D6	D5	D4	D3	D2	D1	D0
04H	Mode Control 1	PLL3	PLL2	PLL1	PLL0	BCKO	0	DIF1	DIF0
Default		0	0	0	0	0	0	1	0

DIF1-0: Audio Interface Format (See Table 17)
Default: “10” (Left jutified)

BCKO: BICK Output Frequency Select at Master Mode (See Table 11)

PLL3-0: PLL Reference Clock Select (See Table 5)
Default: “0000”(LRCK pin)

Addr	Register Name	D7	D6	D5	D4	D3	D2	D1	D0
05H	Mode Control 2	PS1	PS0	FS3	MSBS	BCKP	FS2	FS1	FS0
Default		0	0	0	0	0	0	0	0

FS3-0: Sampling Frequency Select (See Table 6 and Table 7.) and MCKI Frequency Select (See Table 12.)
FS3-0 bits select sampling frequency at PLL mode and MCKI frequency at EXT mode.

BCKP: BICK Polarity at DSP Mode (See Table 18)
“0”: SDTO is output by the rising edge (“↑”) of BICK and SDTI is latched by the falling edge (“↓”). (Default)
“1”: SDTO is output by the falling edge (“↓”) of BICK and SDTI is latched by the rising edge (“↑”).

MSBS: LRCK Polarity at DSP Mode (See Table 18)
“0”: The rising edge (“↑”) of LRCK is half clock of BICK before the channel change. (Default)
“1”: The rising edge (“↑”) of LRCK is one clock of BICK before the channel change.

PS1-0: MCKO Output Frequency Select (See Table 10)
Default: “00”(256fs)

Addr	Register Name	D7	D6	D5	D4	D3	D2	D1	D0
06H	Timer Select	DVTM	WTM2	ZTM1	ZTM0	WTM1	WTM0	RFST1	RFST0
Default		0	0	0	0	0	0	0	0

RFST1-0: ALC First recovery Speed (See Table 30)
Default: “00”(4times)

WTM2-0: ALC Recovery Waiting Period (See Table 27.)
Default: “000” (128/fs)

ZTM1-0: ALC Limiter/Recovery Operation Zero Crossing Timeout Period (See Table 26.)
Default: “00” (128/fs)

DVTM: Digital Volume Transition Time Setting (See Table 36.)
0: 1061/fs (Default)
1: 256/fs
This is the transition time between DVL/R7-0 bits = 00H and FFH.

Addr	Register Name	D7	D6	D5	D4	D3	D2	D1	D0
07H	ALC Mode Control 1	0	0	ALC	ZELMN	LMAT1	LMAT0	RGAIN0	LMTH0
Default		0	0	0	0	0	0	0	0

LMTH1-0: ALC Limiter Detection Level / Recovery Counter Reset Level (See Table 24.)
Default: “00”
LMTH1 bit is D6 bit of 0BH.

RGAIN1-0: ALC Recovery GAIN Step (See Table 28.)
Default: “00”
RGAIN1 bit is D7 bit of 0BH.

LMAT1-0: ALC Limiter ATT Step (See Table 25.)
Default: “00”

ZELMN: Zero Crossing Detection Enable at ALC Limiter Operation
0: Enable (Default)
1: Disable

ALC: ALC Enable
0: ALC Disable (Default)
1: ALC Enable

Addr	Register Name	D7	D6	D5	D4	D3	D2	D1	D0
08H	ALC Mode Control 2	REF7	REF6	REF5	REF4	REF3	REF2	REF1	REF0
Default		1	1	1	0	0	0	0	1

REF7-0: Reference Value at ALC Recovery Operation. 0.375dB step, 242 Level (See Table 29.)
Default: “E1H” (+30.0dB)

Addr	Register Name	D7	D6	D5	D4	D3	D2	D1	D0
09H	Lch Input Volume Control	AVL7	AVL6	AVL5	AVL4	AVL3	AVL2	AVL1	AVL0
0CH	Rch Input Volume Control	AVR7	AVR6	AVR5	AVR4	AVR3	AVR2	AVR1	AVR0
Default		1	1	1	0	0	0	0	1

AVL7-0, AVR7-0: ALC Block Digital Volume; 0.375dB step, 242 Level (See Table 32.)
Default: “E1H” (+30.0dB)

Addr	Register Name	D7	D6	D5	D4	D3	D2	D1	D0
0AH	Lch Digital Volume Control	DVL7	DVL6	DVL5	DVL4	DVL3	DVL2	DVL1	DVL0
0DH	Rch Digital Volume Control	DVR7	DVR6	DVR5	DVR4	DVR3	DVR2	DVR1	DVR0
Default		0	0	0	1	1	0	0	0

DVL7-0, DVR7-0: Output Digital Volume (See Table 35.)
Default: “18H” (0dB)

Addr	Register Name	D7	D6	D5	D4	D3	D2	D1	D0
0BH	ALC Mode Control 3	RGAIN1	LMTH1	0	0	0	0	VBAT	0
Default		0	0	0	0	0	0	0	0

VBAT: HP-Amp Common Voltage (See Table 51.)
0: 0.5 x HVDD (Default)
1: 0.64 x AVDD

LMTH1: ALC Limiter Detection Level / Recovery Counter Reset Level (See Table 24.)

RGAIN1: ALC Recovery GAIN Step (See Table 28.)

Addr	Register Name	D7	D6	D5	D4	D3	D2	D1	D0
0EH	Mode Control 3	0	LOOP	SMUTE	DVOLC	BST1	BST0	DEM1	DEM0
Default		0	0	0	1	0	0	0	1

DEM1-0: De-emphasis Frequency Select (See Table 33)
Default: “01” (OFF)

BST1-0: Bass Boost Function Select (See Table 34)
Default: “00” (OFF)

DVOLC: Output Digital Volume Control Mode Select
0: Independent
1: Dependent (Default)
When DVOLC bit = “1”, DVL7-0 bits control both Lch and Rch volume level, while register values of DVL7-0 bits are not written to DVR7-0 bits. When DVOLC bit = “0”, DVL7-0 bits control Lch level and DVR7-0 bits control Rch level, respectively.

SMUTE: Soft Mute Control
0: Normal Operation (Default)
1: DAC outputs soft-muted

LOOP: Digital Loopback Mode
0: SDTI → DAC (Default)
1: SDTO → DAC

Addr	Register Name	D7	D6	D5	D4	D3	D2	D1	D0
0FH	Mode Control 4	0	0	0	0	AVOLC	HPM	MINH	DACH
Default		0	0	0	0	1	0	0	0

DACH: Switch Control from DAC to Headphone-Amp
0: OFF (Default)
1: ON

MINH: Switch Control from MIN pin to Headphone-Amp
0: OFF (Default)
1: ON

HPM: Headphone-Amp Mono Output Select
0: Stereo (Default)
1: Mono
When the HPM bit = “1”, DAC output signal is output to Lch and Rch of the Headphone-Amp as (L+R)/2.

AVOLC: ALC Block Digital Volume Control Mode Select
0: Independent
1: Dependent (Default)
When AVOLC bit = “1”, AVL7-0 bits control both Lch and Rch volume level, while register values of AVL7-0 bits are not written to AVR7-0 bits. When AVOLC bit = “0”, AVL7-0 bits control Lch level and AVR7-0 bits control Rch level, respectively.

Addr	Register Name	D7	D6	D5	D4	D3	D2	D1	D0
10H	Power Management 3	INR1	INL1	HPG	MDIF2	MDIF1	INR0	INL0	0
Default		0	0	0	0	0	0	0	0

INL1-0: Gain-Amp Lch Input Source Select
Default: 00 (LIN1 pin)

INR1-0: Gain-Amp Rch Input Source Select
Default: 00 (RIN1 pin)

MDIF1: Single-ended / Full-differential Input Select 1
0: Single-ended input (LIN1/RIN1 pins: Default)
1: Full-differential input (IN1+/IN1– pins)
MDIF1 bit selects the input type of pins #32 and #31.

MDIF2: Single-ended / Full-differential Input Select 2
0: Single-ended input (LIN2/RIN2 pins: Default)
1: Full-differential input (IN2+/IN2– pins)
MDIF2 bit selects the input type of pins #30 and #29.

HPG: Headphone-Amp Gain Select (See Table 49.)
0: 0dB (Default)
1: +3.6dB

Addr	Register Name	D7	D6	D5	D4	D3	D2	D1	D0
11H	Digital Filter Select	GN1	GN0	0	FIL1	EQ	FIL3	0	0
Default		0	0	0	0	0	0	0	0

GN1-0: Gain Select at GAIN block (See Table 23.)
Default: “00”

FIL3: FIL3 (Stereo Separation Emphasis Filter) Coefficient Setting Enable
0: Disable (Default)
1: Enable
When FIL3 bit is “1”, the settings of F3A13-0 and F3B13-0 bits are enabled. When FIL3 bit is “0”, FIL3 block is OFF (MUTE).

EQ: EQ (Gain Compensation Filter) Coefficient Setting Enable
0: Disable (Default)
1: Enable
When EQ bit is “1”, the settings of EQA15-0, EQB13-0 and EQC15-0 bits are enabled. When EQ bit is “0”, EQ block is through (0dB).

FIL1: FIL1 (Wind-noise Reduction Filter) Coefficient Setting Enable
0: Disable (Default)
1: Enable
When FIL1 bit is “1”, the settings of F1A13-0 and F1B13-0 bits are enabled. When FIL1 bit is “0”, FIL1 block is through (0dB).

Addr	Register Name	D7	D6	D5	D4	D3	D2	D1	D0
12H	FIL3 Co-efficient 0	F3A7	F3A6	F3A5	F3A4	F3A3	F3A2	F3A1	F3A0
13H	FIL3 Co-efficient 1	F3AS	0	F3A13	F3A12	F3A11	F3A10	F3A9	F3A8
14H	FIL3 Co-efficient 2	F3B7	F3B6	F3B5	F3B4	F3B3	F3B2	F3B1	F3B0
15H	FIL3 Co-efficient 3	0	0	F3B13	F3B12	F3B11	F3B10	F3B9	F3B8
16H	EQ Co-efficient 0	EQA7	EQA6	EQA5	EQA4	EQA3	EQA2	EQA1	EQA0
17H	EQ Co-efficient 1	EQA15	EQA14	EQA13	EQA12	EQA11	EQA10	EQA9	EQA8
18H	EQ Co-efficient 2	EQB7	EQB6	EQB5	EQB4	EQB3	EQB2	EQB1	EQB0
19H	EQ Co-efficient 3	0	0	EQB13	EQB12	EQB11	EQB10	EQB9	EQB8
1AH	EQ Co-efficient 4	EQC7	EQC6	EQC5	EQC4	EQC3	EQC2	EQC1	EQC0
1BH	EQ Co-efficient 5	EQC15	EQC14	EQC13	EQC12	EQC11	EQC10	EQC9	EQC8
1CH	FIL1 Co-efficient 0	F1A7	F1A6	F1A5	F1A4	F1A3	F1A2	F1A1	F1A0
1DH	FIL1 Co-efficient 1	F1AS	0	F1A13	F1A12	F1A11	F1A10	F1A9	F1A8
1EH	FIL1 Co-efficient 2	F1B7	F1B6	F1B5	F1B4	F1B3	F1B2	F1B1	F1B0
1FH	FIL1 Co-efficient 3	0	0	F1B13	F1B12	F1B11	F1B10	F1B9	F1B8
Default		0	0	0	0	0	0	0	0

F3A13-0, F3B13-0: FIL3 (Stereo Separation Emphasis Filter) Coefficient (14bit x 2)
Default: “0000H”

F3AS: FIL3 (Stereo Separation Emphasis Filter) Select
0: HPF (Default)
1: LPF

EQA15-0, EQB13-0, EQC15-C0: EQ (Gain Compensation Filter) Coefficient (14bit x 2 + 16bit x 1)
Default: “0000H”

F1A13-0, F1B13-B0: FIL1 (Wind-noise Reduction Filter) Coefficient (14bit x 2)
Default: “0000H”

F1AS: FIL1 (Wind-noise Reduction Filter) Select
0: HPF (Default)
1: LPF

Addr	Register Name	D7	D6	D5	D4	D3	D2	D1	D0
20H	Power Management 4	0	0	PMAINR3	PMAINL3	PMAINR2	PMAINL2	PMMICR	PMMICL
Default		0	0	0	0	0	0	0	0

PMMICL: Gain-Amp Lch Power Management
0: Power down (Default)
1: Power up

PMMICR: Gain-Amp Rch Power Management
0: Power down (Default)
1: Power up

PMAINL2: LIN2 Mixing Circuit Power Management
0: Power down (Default)
1: Power up

PMAINR2: RIN2 Mixing Circuit Power Management
0: Power down (Default)
1: Power up

PMAINL3: LIN3 Mixing Circuit Power Management
0: Power down (Default)
1: Power up
PMMIN or PMAINL3 bit should be set to “1” for playback.

PMAINR3: RIN3 Mixing Circuit Power Management
0: Power down (Default)
1: Power up

Addr	Register Name	D7	D6	D5	D4	D3	D2	D1	D0
21H	Mode Control 5	0	0	MICR3	MICL3	0	0	AIN3	RCV
Default		0	0	0	0	0	0	0	0

RCV: Receiver Select
0: Stereo Line Output (LOUT/ROUT pins) (Default)
1: Mono Receiver Output (RCP/RCN pins)

AIN3: Analog Mixing Select
0: Mono Input (MIN pin) (Default)
1: Stereo Input (LIN3/RIN3 pins): PLL is not available.

MICL3: Switch Control from Gain-Amp Lch to Analog Output
0: LIN3 input signal is selected. (Default)
1: Gain-Amp Lch output signal is selected.

MICR3: Switch Control from Gain-Amp Rch to Analog Output
0: RIN3 input signal is selected. (Default)
1: Gain-Amp Rch output signal is selected.

Addr	Register Name	D7	D6	D5	D4	D3	D2	D1	D0
22H	Lineout Mixing Select	0	0	0	0	RINR3	LINL3	RINR2	LINL2
Default		0	0	0	0	0	0	0	0

LINL2: Switch Control from LIN2 pin to Stereo Line Output (without Gain-Amp)
0: OFF (Default)
1: ON

RINR2: Switch Control from RIN2 pin to Stereo Line Output (without Gain-Amp)
0: OFF (Default)
1: ON

LINL3: Switch Control from LIN3 pin (or Gain-Amp Lch) to Stereo Line Output
0: OFF (Default)
1: ON

RINR3: Switch Control from RIN3 pin (or Gain-Amp Rch) to Stereo Line Output
0: OFF (Default)
1: ON

Addr	Register Name	D7	D6	D5	D4	D3	D2	D1	D0
23H	HP Mixing Select	0	0	0	0	RINH3	LINH3	RINH2	LINH2
Default		0	0	0	0	0	0	0	0

LINH2: Switch Control from LIN2 pin to Headphone Output (without Gain -Amp)
0: OFF (Default)
1: ON

RINH2: Switch Control from RIN2 pin to Headphone Output (without Gain-Amp)
0: OFF (Default)
1: ON

LINH3: Switch Control from LIN3 pin (or Gain-Amp Lch) to Headphone Output
0: OFF (Default)
1: ON

RINH3: Switch Control from RIN3 pin (or Gain-Amp Rch) to Headphone Output
0: OFF (Default)
1: ON

Addr	Register Name	D7	D6	D5	D4	D3	D2	D1	D0
24H	SPK Mixing Select	0	0	0	0	RINS3	LINS3	RINS2	LINS2
Default		0	0	0	0	0	0	0	0

LINS2: Switch Control from LIN2 pin to Speaker Output (without Gain-Amp)
0: OFF (Default)
1: ON

RINS2: Switch Control from RIN2 pin to Speaker Output (without Gain-Amp)
0: OFF (Default)
1: ON

LINS3: Switch Control from LIN3 pin (or Gain-Amp Lch) to Speaker Output
0: OFF (Default)
1: ON

RINS3: Switch Control from RIN3 pin (or Gain-Amp Rch) to Speaker Output
0: OFF (Default)
1: ON

SYSTEM DESIGN

Figure 72 and Figure 73 shows the system connection diagram for the AK4343. An evaluation board [AKD4343] is available which demonstrates the optimum layout, power supply arrangements and measurement results.

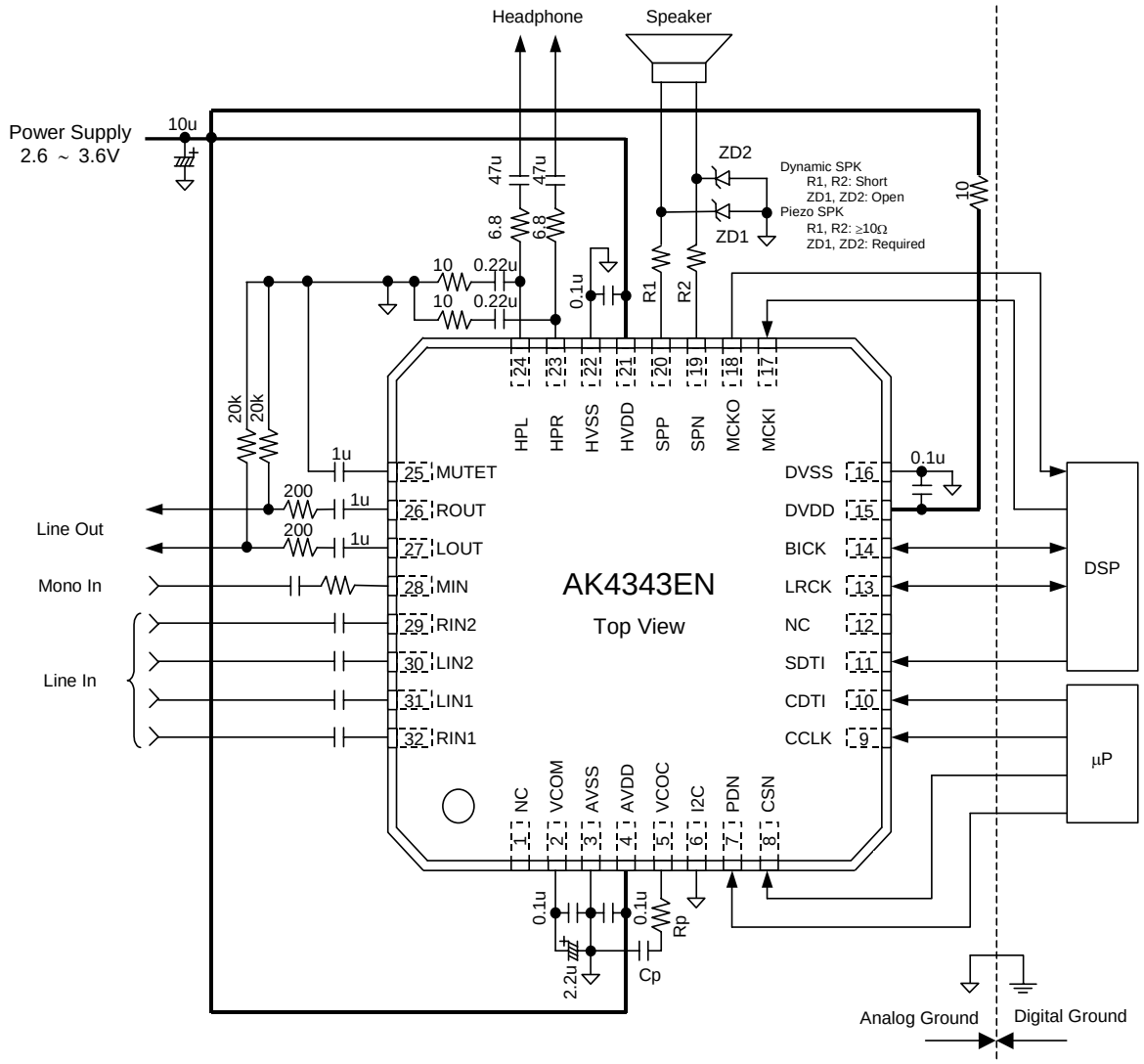

Notes:

- AVSS, DVSS and HVSS of the AK4343 should be distributed separately from the ground of external controllers.
- All digital input pins should not be left floating.
- When the AK4343 is EXT mode (PMPLL bit = “0”), a resistor and capacitor of VCOC pin is not needed.
- When the AK4343 is PLL mode (PMPLL bit = “1”), a resistor and capacitor of VCOC pin is shown in Table 5.
- When piezo speaker is used, 2.6 ~ 5.25V power should be supplied to HVDD and 10Ω or more series resistors should be connected to both SPP and SPN pins, respectively.
- When the AK4343 is used at master mode, LRCK and BICK pins are floating before M/S bit is changed to “1”. Therefore, 100kΩ around pull-up resistor should be connected to LRCK and BICK pins of the AK4343.

Figure 72. Typical Connection Diagram (AIN3 bit = “0”, Line Input)

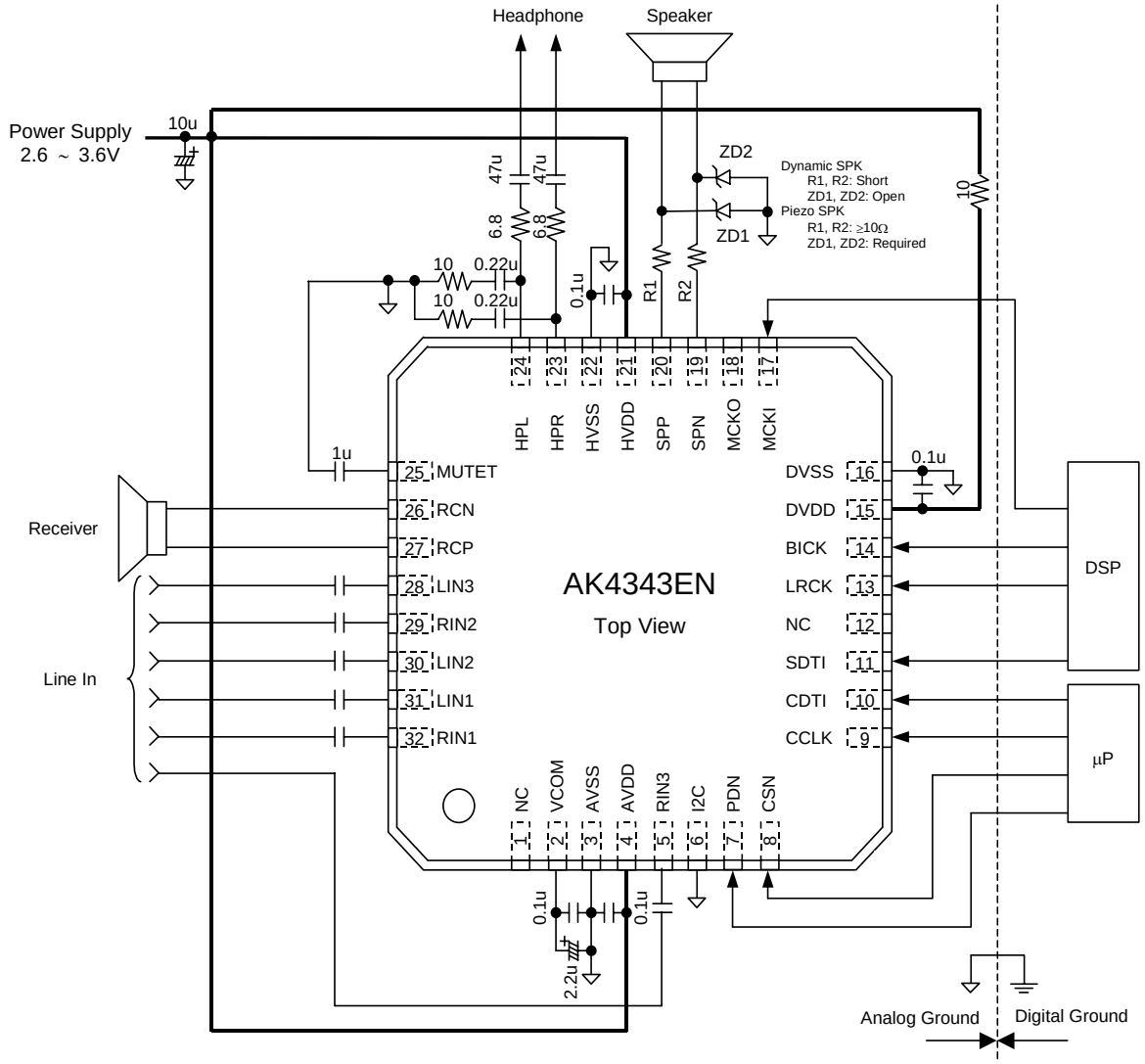

Notes:

- AVSS, DVSS and HVSS of the AK4343 should be distributed separately from the ground of external controllers.
- All digital input pins should not be left floating.
- When AIN3 bit = “1”, PLL is not available.
- When piezo speaker is used, 2.6 ~ 5.25V power should be supplied to HVDD and 10Ω or more series resistors should be connected to both SPP and SPN pins, respectively.

Figure 73. Typical Connection Diagram (AIN3 bit = “1”: PLL is not available, RCV bit = “1”, Line Input)

1. Grounding and Power Supply Decoupling

The AK4343 requires careful attention to power supply and grounding arrangements. AVDD, DVDD and HVDD are usually supplied from the system's analog supply. If AVDD, DVDD and HVDD are supplied separately, the power-up sequence is not critical. AVSS, DVSS and HVSS of the AK4343 should be connected to the analog ground plane. System analog ground and digital ground should be connected together near to where the supplies are brought onto the printed circuit board. Decoupling capacitors should be as near to the AK4343 as possible, with the small value ceramic capacitor being the nearest.

2. Voltage Reference

VCOM is a signal ground of this chip. A 2.2μF electrolytic capacitor in parallel with a 0.1μF ceramic capacitor attached to the VCOM pin eliminates the effects of high frequency noise. No load current may be drawn from the VCOM pin. All signals, especially clocks, should be kept away from the VCOM pin in order to avoid unwanted coupling into the AK4343.

3. Analog Inputs

The Line and MIN inputs are single-ended. The input signal range scales with nominally at 0.06 x AVDD Vpp(typ) @MGAIN1-0 bits = "01", 0.03 x AVDD Vpp(typ) @MGAIN1-0 bits = "10", 0.015 x AVDD Vpp(typ) @MGAIN1-0 bits = "11" or 0.6 x AVDD Vpp(typ) @MGAIN1-0 bits = "00" for the Line input and 0.6 x AVDD Vpp (typ) for the MIN input, centered around the internal common voltage (0.45 x AVDD). Usually the input signal is AC coupled using a capacitor. The cut-off frequency is fc = (1/2πRC). The AK4343 can accept input voltages from AVSS to AVDD.

4. Analog Outputs

The input data format for the DAC is 2's complement. The output voltage is a positive full scale for 7FFFH(@16bit) and a negative full scale for 8000H(@16bit). Stereo Line Output and Receiver Output are centered at 0.45 x AVDD. The Headphone-Amp and Speaker-Amp outputs are centered at HVDD/2.

CONTROL SEQUENCE

■ Clock Set up

When DAC is powered-up, the clocks must be supplied.

1. PLL Master Mode.

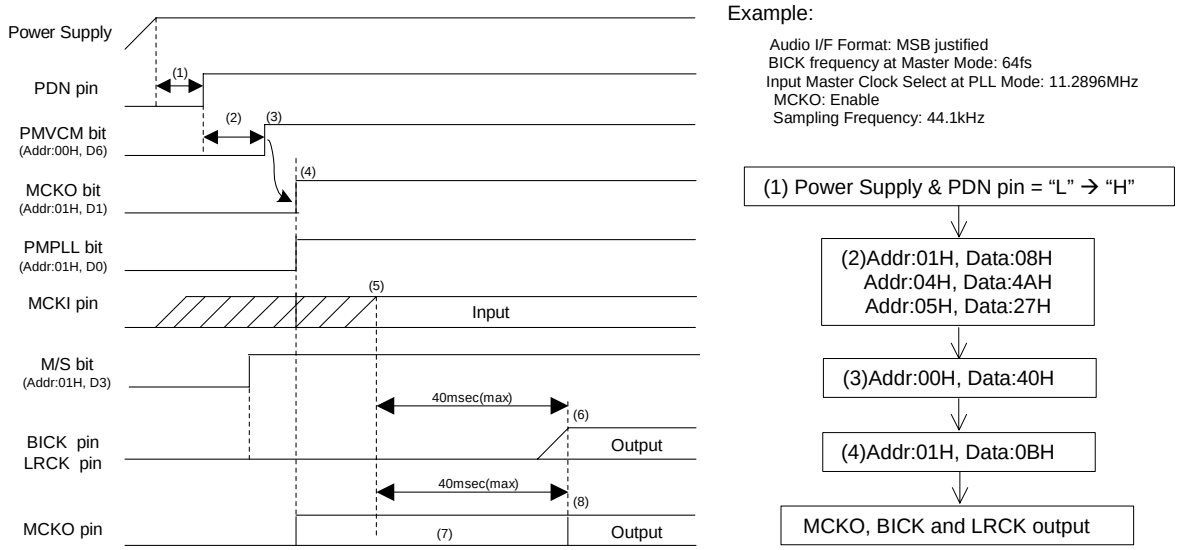

Figure 74. Clock Set Up Sequence (1)

<Example>

(1) After Power Up, PDN pin = "L" → "H"
"L" time of 150ns or more is needed to reset the AK4343.
(2) DIF1-0, PLL3-0, FS3-0, BCKO and M/S bits should be set during this period.
(3) Power UpVCOM: PMVCM bit = "0" → "1"
VCOM should first be powered-up before the other block operates.
(4) In case of using MCKO output: MCKO bit = "1"
In case of not using MCKO output: MCKO bit = "0"
(5) PLL lock time is 40ms(max) after PMPLL bit changes from "0" to "1" and MCKI is supplied from an external source.
(6) The AK4343 starts to output the LRCK and BICK clocks after the PLL becomes stable. Then normal operation starts.
(7) The invalid frequency is output from MCKO pin during this period if MCKO bit = "1".
(8) The normal clock is output from MCKO pin after the PLL is locked if MCKO bit = "1".

2. PLL Slave Mode (LRCK or BICK pin)

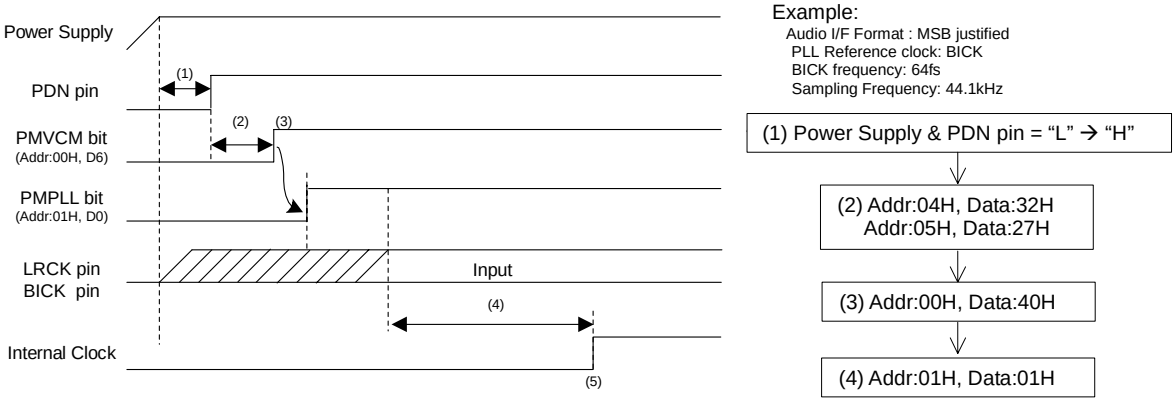

Figure 75. Clock Set Up Sequence (2)

<Example>

(2) After Power Up: PDN pin "L" → "H"
"L" time of 150ns or more is needed to reset the AK4343.

(3) DIF1-0, FS3-0 and PLL3-0 bits should be set during this period.

(4) Power Up VCOM: PMVCM bit = "0" → "1"
VCOM should first be powered up before the other block operates.

(5) PLL starts after the PMPLL bit changes from "0" to "1" and PLL reference clock (LRCK or BICK pin) is supplied. PLL lock time is 160ms(max) when LRCK is a PLL reference clock. And PLL lock time is 2ms(max) when BICK is a PLL reference clock.

(6) Normal operation stats after that the PLL is locked.

3. PLL Slave Mode (MCKI pin)

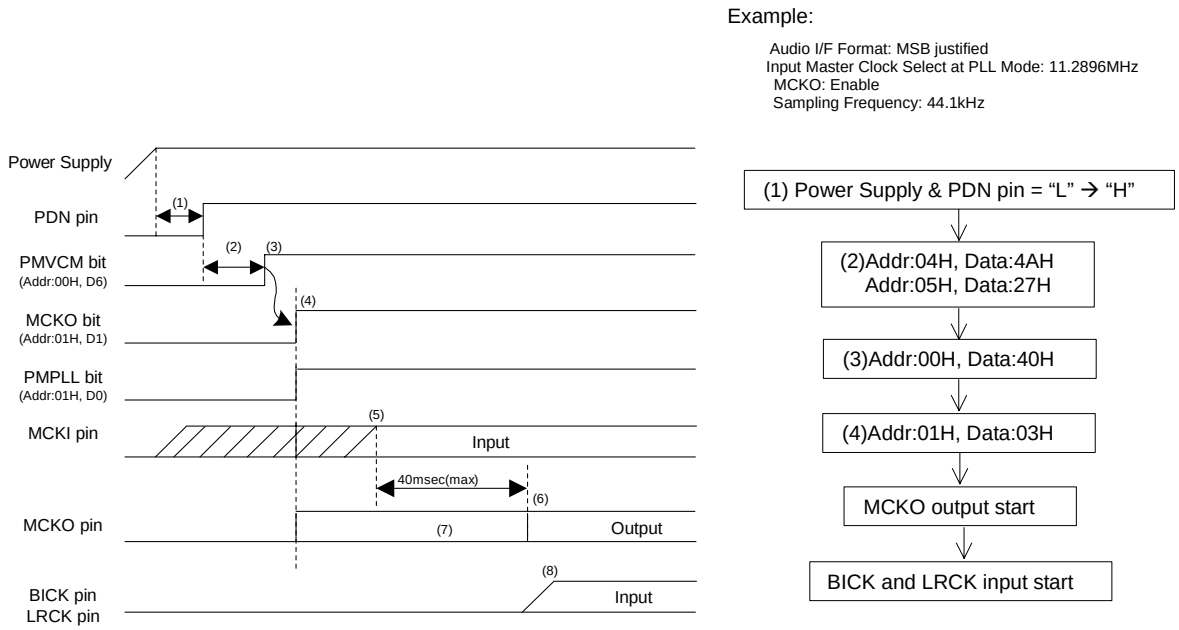

Figure 76. Clock Set Up Sequence (3)

<Example>

(1) After Power Up: PDN pin "L" → "H"
"L" time of 150ns or more is needed to reset the AK4343.
(2) DIF1-0, PLL3-0 and FS3-0 bits should be set during this period.
(3) Power Up VCOM: PMVCM bit = "0" → "1"
VCOM should first be powered up before the other block operates.
(4) Enable MCKO output: MCKO bit = "1"
(5) PLL starts after that the PMPLL bit changes from "0" to "1" and PLL reference clock (MCKI pin) is supplied.
PLL lock time is 40ms(max).
(6) The normal clock is output from MCKO after PLL is locked.
(7) The invalid frequency is output from MCKO during this period.
(8) BICK and LRCK clocks should be synchronized with MCKO clock.

4. EXT Slave Mode

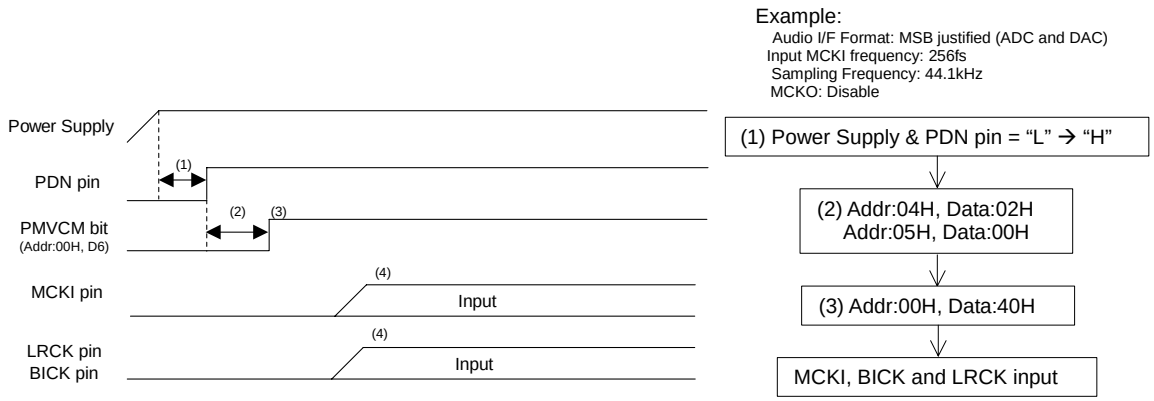

Figure 77. Clock Set Up Sequence (4)

<Example>

(1) After Power Up: PDN pin "L" → "H"
"L" time of 150ns or more is needed to reset the AK4343.
(2) DIF1-0 and FS1-0 bits should be set during this period.
(3) Power Up VCOM: PMVCM bit = "0" → "1"
VCOM should first be powered up before the other block operates.
(4) Normal operation starts after the MCKI, LRCK and BICK are supplied.

5. EXT Master Mode

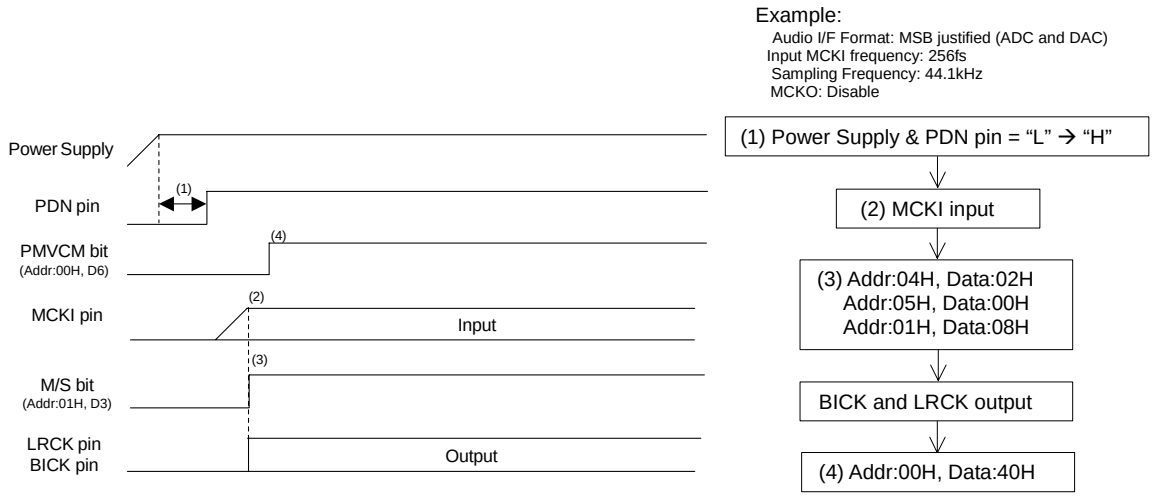

Figure 78. Clock Set Up Sequence (5)

<Example>

(1) After Power Up: PDN pin "L" → "H"
"L" time of 150ns or more is needed to reset the AK4343.

(2) MCKI should be input.

(3) After DIF1-0 and FS1-0 bits are set, M/S bit should be set to "1". Then LRCK and BICK are output.

(4) Power Up VCOM: PMVCM bit = "0" → "1"
VCOM should first be powered up before the other block operates.

■ Speaker-amp Output

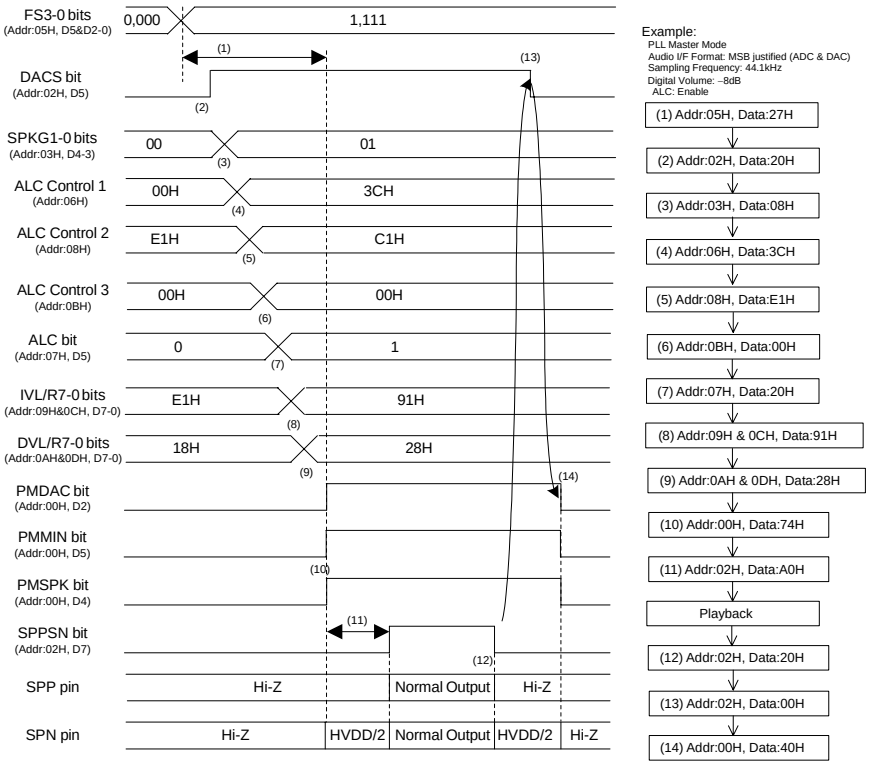

Figure 79. Speaker-Amp Output Sequence

<Example>

At first, clocks should be supplied according to “Clock Set Up” sequence.

(1) Set up a sampling frequency (FS3-0 bits). When the AK4343 is PLL mode, DAC and Speaker-Amp should be powered-up in consideration of PLL lock time after a sampling frequency is changed.
(2) Set up the path of “DAC → SPK-Amp”: DACS bit = “0” → “1”
(3) SPK-Amp gain setting: SPKG1-0 bits = “00” → “01”
(4) Set up Timer Select for ALC (Addr: 06H)
(5) Set up REF value for ALC (Addr: 08H)
(6) Set up LMTH1 and RGAIN1 bits (Addr: 0BH)
(7) Set up LMTH0, RGAIN0, LMAT1-0 and ALC bits (Addr: 07H)
(8) Set up the ALC Block Digital Volume (Addr: 09H and 0CH)
AVL7-0 and AVR7-0 bits should be set to “91H”(0dB).
(9) Set up the output digital volume (Addr: 0AH and 0DH).
When DVOLC bit is “1” (default), DVL7-0 bits set the volume of both channels. After DAC is powered-up, the digital volume changes from default value (0dB) to the register setting value by the soft transition.
(10) Power Up of DAC, MIN-Amp and Speaker-Amp: PMDAC = PMMIN = PMSPK bits = “0” → “1”
The DAC enters an initialization cycle that starts when the PMDAC bit is changed from “0” to “1”. The initialization cycle time is 1059/fs=24ms@fs=44.1kHz. During the initialization cycle, the DAC input digital data of both channels are internally forced to a 2's compliment, “0”. The DAC output reflects the digital input data after the initialization cycle is complete. When ALC bit is “1”, ALC is disable (ALC gain is set by AVL/R7-0 bits) during an intialization cycle (1059/fs=24ms@fs=44.1kHz). After the initialization cycle, ALC operation starts from the gain set by AVL/R7-0 bits.
(11) Exit the power-save-mode of Speaker-Amp: SPPSN bit = “0” → “1”
(12) Enter the power-save-mode of Speaker-Amp: SPPSN bit = “1” → “0”
(13) Disable the path of “DAC → SPK-Amp”: DACS bit = “1” → “0”
(14) Power Down DAC, MIN-Amp and Speaker-Amp: PMDAC = PMMIN = PMSPK bits = “1” → “0”

■ Mono signal output from Speaker-Amp

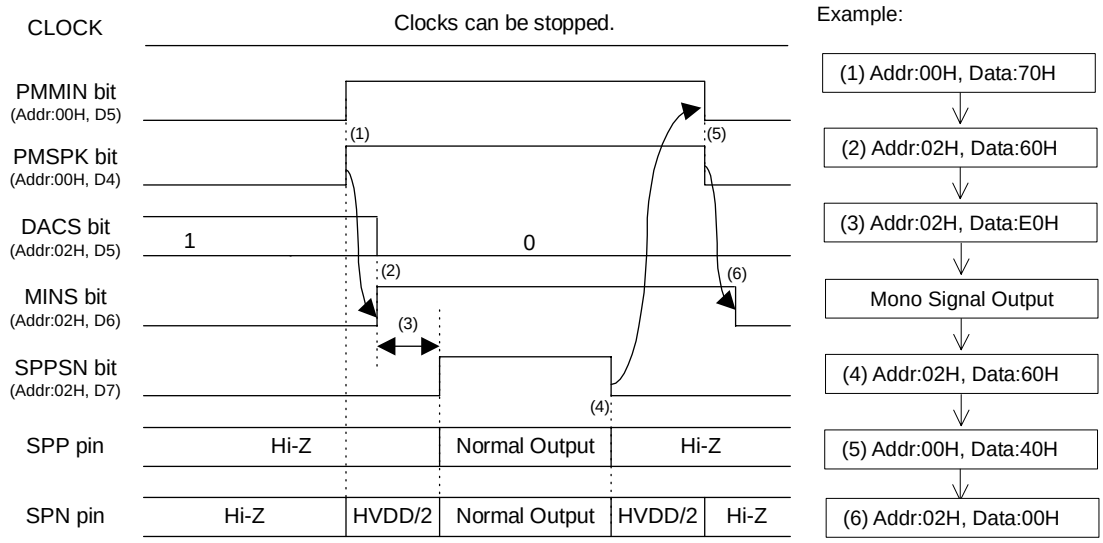

Figure 80. “MIN-Amp → Speaker-Amp” Output Sequence

<Example>

The clocks can be stopped when only MIN-Amp and Speaker-Amp are operating.

(1) Power Up MIN-Amp and Speaker-Amp: PMMIN = PMSPK bits = “0” → “1”
(2) Disable the path of “DAC → SPK-Amp”: DACS bit = “0”
Enable the path of “MIN → SPK-Amp”: MINS bit = “0” → “1”
(3) Exit the power-save-mode of Speaker-Amp: SPPSN bit = “0” → “1”
(4) Enter the power-save-mode of Speaker-Amp: SPPSN bit = “1” → “0”
(5) Power Down MIN-Amp and Speaker-Amp: PMMIN = PMSPK bits = “1” → “0”
(6) Disable the path of “MIN → SPK-Amp”: MINS bit = “1” → “0”

■ Headphone-amp Output

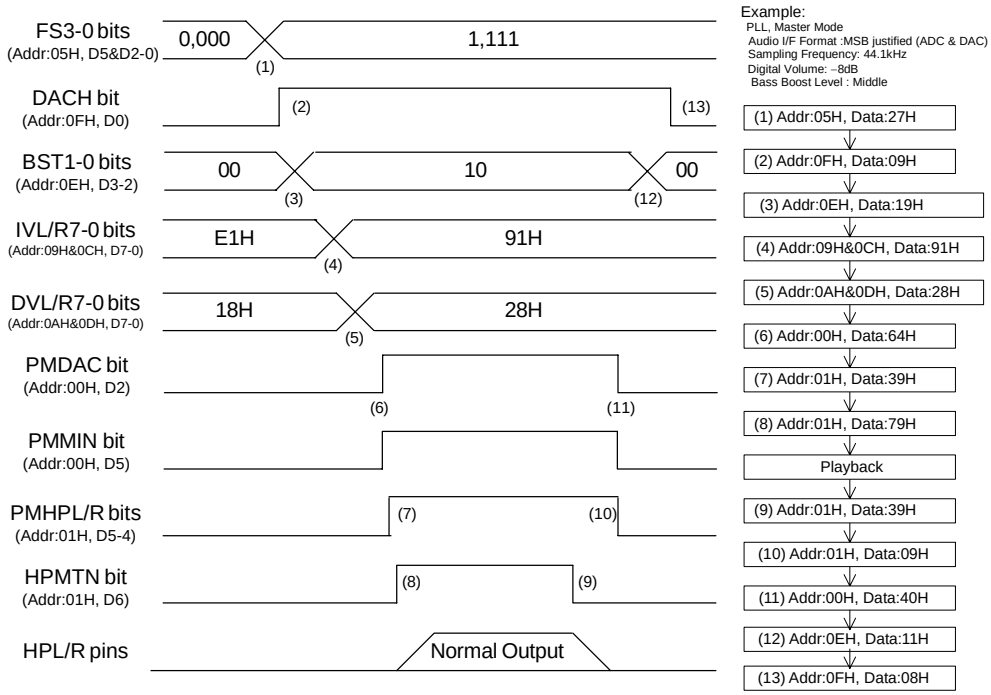

Figure 81. Headphone-Amp Output Sequence

<Example>

At first, clocks should be supplied according to “Clock Set Up” sequence.

(1) Set up a sampling frequency (FS3-0 bits). When the AK4343 is PLL mode, DAC and Speaker-Amp should be powered-up in consideration of PLL lock time after a sampling frequency is changed.

(2) Set up the path of “DAC → HP-Amp”: DACH bit = “0” → “1”

(3) Set up the low frequency boost level (BST1-0 bits)

(4) Set up the ALC Block Digital Volume (Addr: 09H and 0CH)
AVL7-0 and AVR7-0 bits should be set to “91H”(0dB).

(5) Set up the output digital volume (Addr: 0AH and 0DH)
When DVOLC bit is “1” (default), DVL7-0 bits set the volume of both channels. After DAC is powered-up, the digital volume changes from default value (0dB) to the register setting value by the soft transition.

(6) Power up DAC and MIN-Amp: PMDAC = PMMIN bits = “0” → “1”
The DAC enters an initialization cycle that starts when the PMDAC bit is changed from “0” to “1”. The initialization cycle time is 1059/fs=24ms@fs=44.1kHz. During the initialization cycle, the DAC input digital data of both channels are internally forced to a 2's compliment, “0”. The DAC output reflects the digital input data after the initialization cycle is complete. When ALC bit is “1”, ALC is disable (ALC gain is set by AVL/R7-0 bits) during an intialization cycle (1059/fs=24ms@fs=44.1kHz). After the initialization cycle, ALC operation starts from the gain set by AVL/R7-0 bits.

(7) Power up headphone-amp: PMHPL = PMHPR bits = “0” → “1”
Output voltage of headphone-amp is still HVSS.

(8) Rise up the common voltage of headphone-amp: HPMTN bit = “0” → “1”
The rise time depends on HVDD and the capacitor value connected with the MUTET pin. When HVDD=3.3V and the capacitor value is 1.0μF, the time constant is τ_r = 100ms(typ), 250ms(max).

(9) Fall down the common voltage of headphone-amp: HPMTN bit = “1” → “0”
The fall time depends on HVDD and the capacitor value connected with the MUTET pin. When HVDD=3.3V and the capacitor value is 1.0μF, the time constant is τ_f = 100ms(typ), 250ms(max).
If the power supply is powered-off or headphone-Amp is powered-down before the common voltage goes to GND, the pop noise occurs. It takes twice of τ_f that the common voltage goes to GND.

(10) Power down headphone-amp: PMHPL = PMHPR bits = “1” → “0”

(11) Power down DAC and MIN-Amp: PMDAC = PMMIN bits = “1” → “0”

(12) Off the bass boost: BST1-0 bits = “00”

(13) Disable the path of “DAC → HP-Amp”: DACH bit = “1” → “0”

■ Stereo Line Output

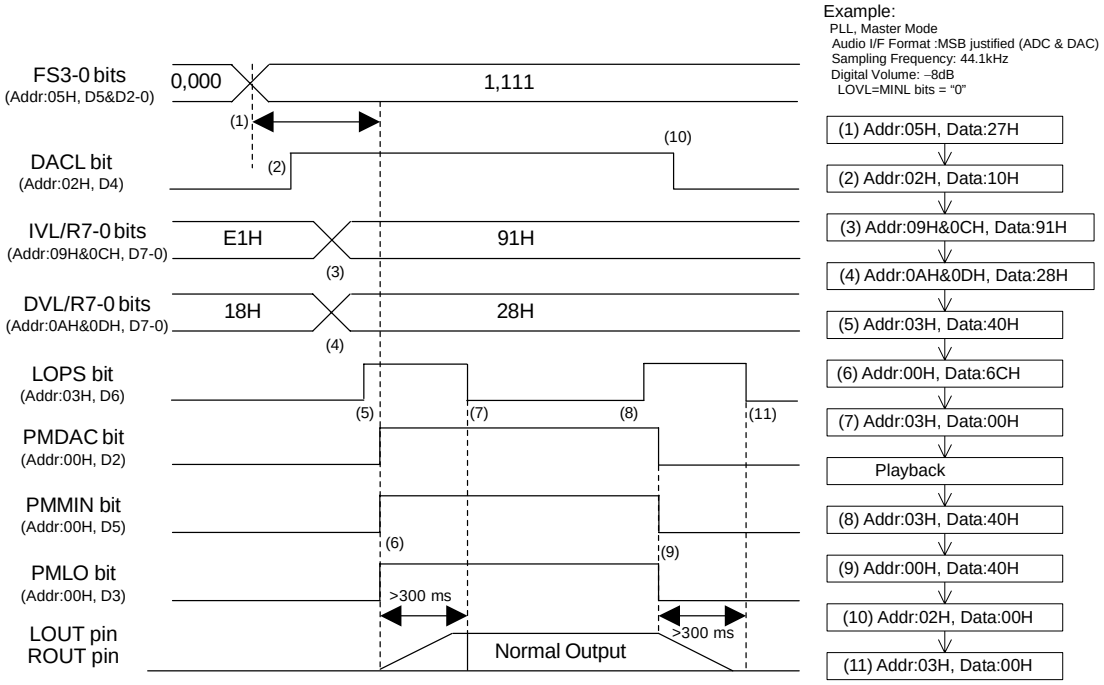

Figure 82. Stereo Lineout Sequence

<Example>

At first, clocks should be supplied according to "Clock Set Up" sequence.

(1) Set up the sampling frequency (FS3-0 bits). When the AK4343 is PLL mode, DAC and Stereo Line-Amp should be powered-up in consideration of PLL lock time after the sampling frequency is changed.

(2) Set up the path of "DAC → Stereo Line Amp": DACL bit = "0" → "1"

(3) Set up the ALC Block Digital Volume (Addr: 09H and 0CH)
AVL7-0 and AVR7-0 bits should be set to "91H"(0dB).

(4) Set up the output digital volume (Addr: 0AH and 0DH)
When DVOLC bit is "1" (default), DVL7-0 bits set the volume of both channels. After DAC is powered-up, the digital volume changes from default value (0dB) to the register setting value by the soft transition.

(5) Enter power-save mode of Stereo Line Amp: LOPS bit = "0" → "1"

(6) Power-up DAC, MIN-Amp and Stereo Line-Amp: PMDAC = PMMIN = PMLO bits = "0" → "1"
The DAC enters an initialization cycle that starts when the PMDAC bit is changed from "0" to "1". The initialization cycle time is 1059/fs=24ms@fs=44.1kHz. During the initialization cycle, the DAC input digital data of both channels are internally forced to a 2's compliment, "0". The DAC output reflects the digital input data after the initialization cycle is complete. When ALC bit is "1", ALC is disable (ALC gain is set by AVL/R7-0 bits) during an intialization cycle (1059/fs=24ms@fs=44.1kHz). After the initialization cycle, ALC operation starts from the gain set by AVL/R7-0 bits.
LOUT and ROUT pins rise up to VCOM voltage after PMLO bit is changed to "1". Rise time is 300ms(max) at C=1μF and AVDD=3.3V.

(7) Exit power-save mode of Stereo Line-Amp: LOPS bit = "1" → "0"
LOPS bit should be set to "0" after LOUT and ROUT pins rise up. Stereo Line-Amp goes to normal operation by setting LOPS bit to "0".

(8) Enter power-save mode of Stereo Line-Amp: LOPS bit: "0" → "1"

(9) Power-down DAC, MIN-Amp and Stereo Line-Amp: PMDAC = PMMIN = PMLO bits = "1" → "0"
LOUT and ROUT pins fall down to AVSS. Fall time is 300ms(max) at C=1μF and AVDD=3.3V.

(10) Disable the path of "DAC → Stereo Line-Amp": DACL bit = "1" → "0"

(11) Exit power-save mode of Stereo Line-Amp: LOPS bit = "1" → "0"
LOPS bit should be set to "0" after LOUT and ROUT pins fall down.

■ Receiver-amp Output

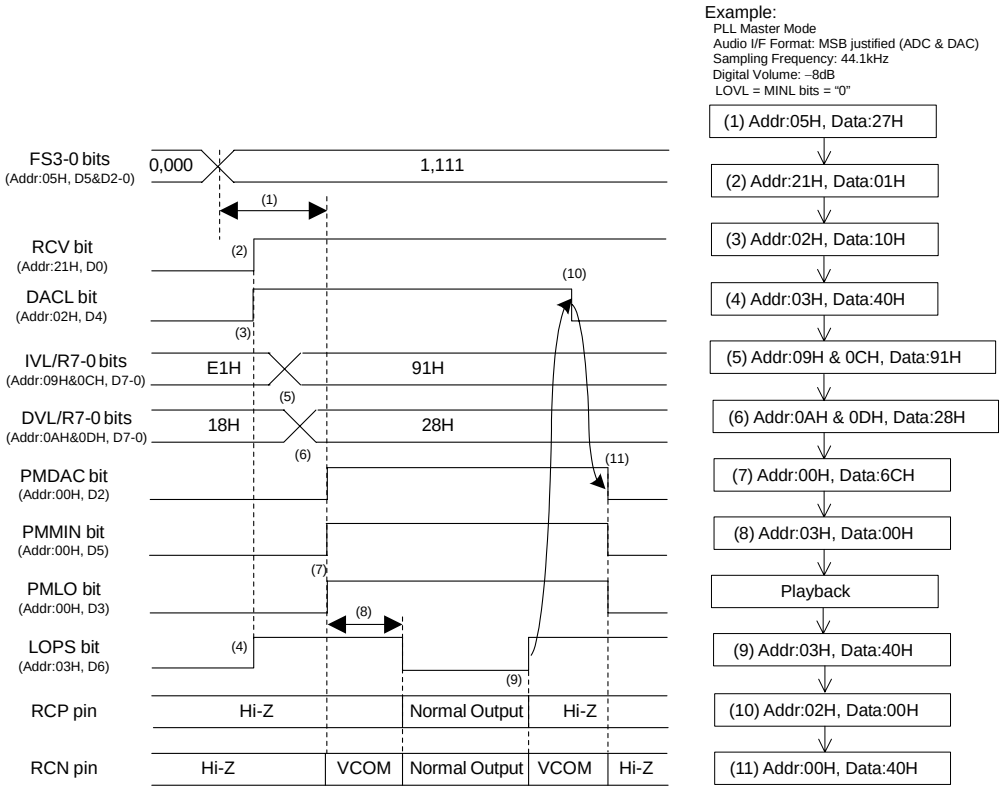

Figure 83. Speaker-Amp Output Sequence

<Example>

At first, clocks should be supplied according to "Clock Set Up" sequence.

(1) Set up a sampling frequency (FS3-0 bits). When the AK4343 is PLL mode, DAC and Receiver-Amp should be powered-up in consideration of PLL lock time after a sampling frequency is changed.

(2) Set up the path of "DAC → RCV-Amp and Power-save mode": DACL=LOPS bit = "0" → "1"

(3) Set up the ALC Block Digital Volume (Addr: 09H and 0CH)
AVL7-0 and AVR7-0 bits should be set to "91H"(0dB).

(4) Set up the output digital volume (Addr: 0AH and 0DH).
When DVOLC bit is "1" (default), DVL7-0 bits set the volume of both channels. After DAC is powered-up, the digital volume changes from default value (0dB) to the register setting value by the soft transition.

(5) Power Up of DAC, MIN-Amp and Receiver-Amp: PMDAC = PMMIN = PMLO bits = "0" → "1"
The DAC enters an initialization cycle that starts when the PMDAC bit is changed from "0" to "1". The initialization cycle time is 1059/fs=24ms@fs=44.1kHz. During the initialization cycle, the DAC input digital data of both channels are internally forced to a 2's compliment, "0". The DAC output reflects the digital input data after the initialization cycle (1059/fs=24ms@fs=44.1kHz) is complete.

(6) Exit the power-save-mode of Receiver-Amp: LOPS bit = "1" → "0"

(7) Enter the power-save-mode of Receiver-Amp: LOPS bit = "0" → "1"

(8) Disable the path of "DAC → RCV-Amp": DACL bit = "1" → "0"

(9) Power Down DAC, MIN-Amp and Receiver-Amp: PMDAC = PMMIN = PMLO bits = "1" → "0"

■ Stop of Clock

Master clock can be stopped when DAC is not used.

1. PLL Master Mode

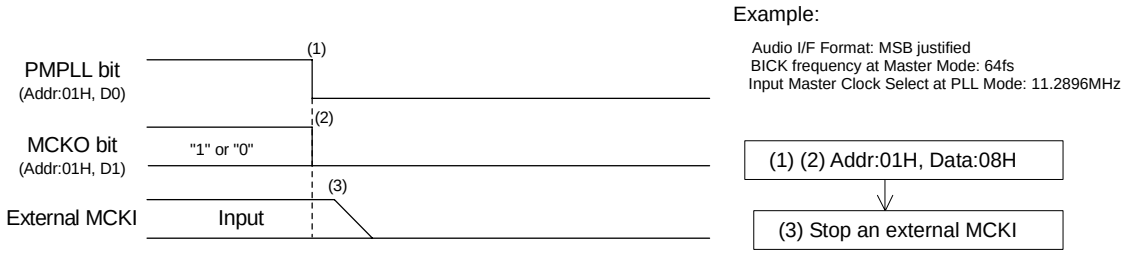

Figure 84. Clock Stopping Sequence (1)

<Example>
(1) Power down PLL: PMPLL bit = “1” → “0”
(2) Stop MCKO clock: MCKO bit = “1” → “0”
(3) Stop an external master clock.

2. PLL Slave Mode (LRCK or BICK pin)

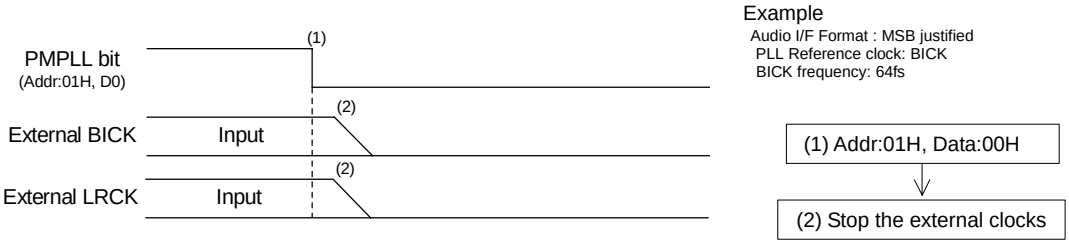

Figure 85. Clock Stopping Sequence (2)

<Example>
(1) Power down PLL: PMPLL bit = “1” → “0”
(2) Stop the external BICK and LRCK clocks

3. PLL Slave (MCKI pin)

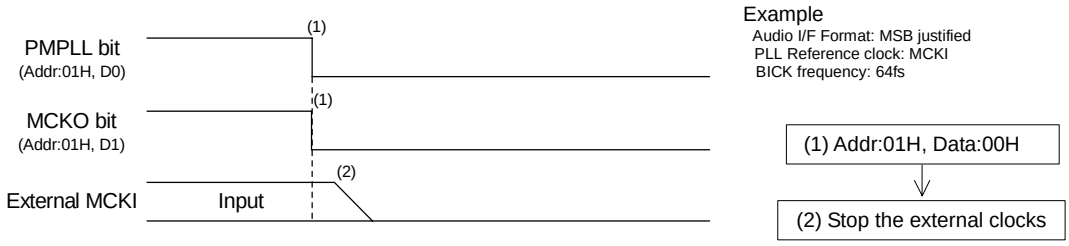

Figure 86. Clock Stopping Sequence (3)

<Example>
(1) Power down PLL: PMPLL bit = “1” → “0”
Stop MCKO output: MCKO bit = “1” → “0”
(2) Stop the external master clock.

4. EXT Slave Mode

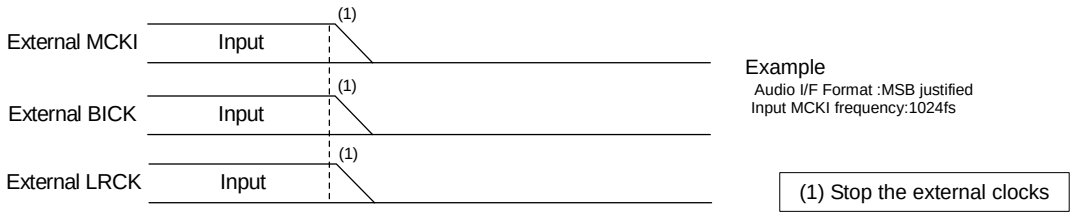

Figure 87. Clock Stopping Sequence (4)

<Example>
(1) Stop the external MCKI, BICK and LRCK clocks.

5. EXT Master Mode

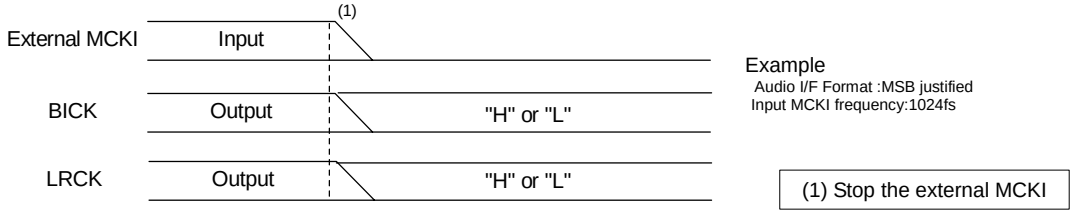

Figure 88. Clock Stopping Sequence (5)

<Example>
(1) Stop MCKI clock. BICK and LRCK are fixed to “H” or “L”.

■ Power down

Power supply current can be shut down (typ. 10μA) by stopping clocks and setting PMVCM bit = “0” after all blocks except for VCOM are powered-down. Power supply current can be also shut down (typ. 10μA) by stopping clocks and setting PDN pin = “L”. When PDN pin = “L”, the registers are initialized.

PACKAGE

● 32pin QFN (Unit: mm)

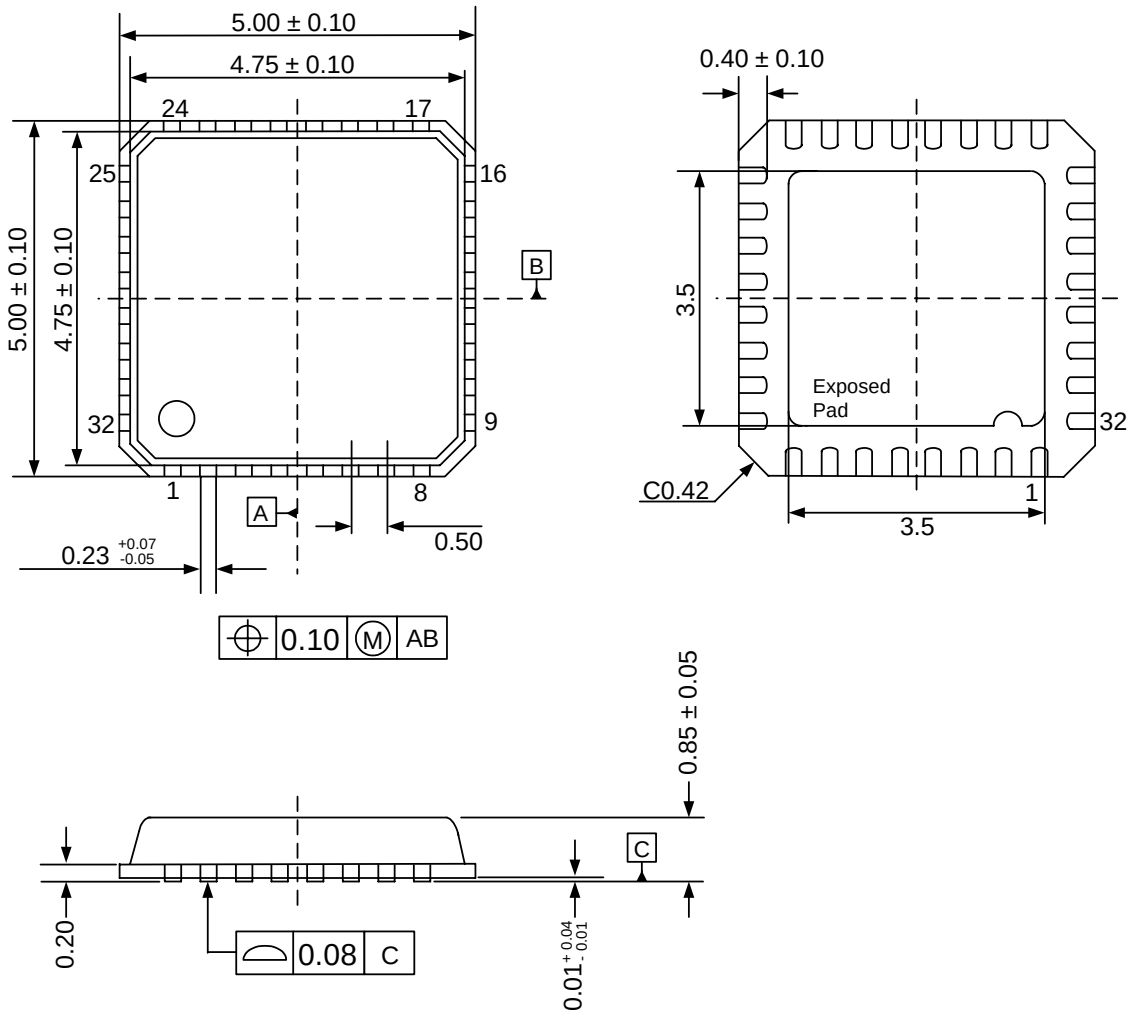

Note) The exposed pad on the bottom surface of the package must be open or connected to the ground.

■ Material & Lead finish

Package molding compound:	Epoxy
Lead frame material:	Cu
Lead frame surface treatment:	Solder (Pb free) plate

MARKING

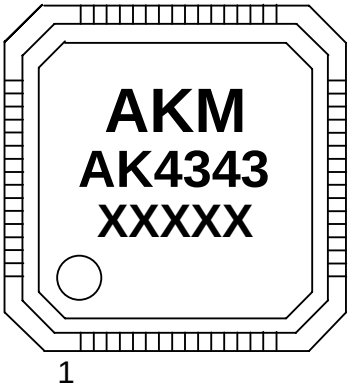

XXXXX : Date code identifier (5 digits)

Revision History

Date (YY/MM/DD)	Revision	Reason	Page	Contents
06/04/04	00	First Edition		
06/10/24	01	Spec change	35-36	MIC/LINE Input Selector "When full-differential input is used, the signal should not be input to the pins marked by "X" in Table 20." was added. Table 20 (Handling of MIC/Line Input Pins) was added.
		Error correct	53	Stereo Line Output Control Sequence Power-down mode: PMLO bit = "1" → PMLO bit = "0"
			65	I^2C Bus Control Mode "those most significant 3-bits are fixed to zeros" → "those most significant 2-bits are fixed to zeros"
			75	Register Definitions (Addr=0FH) HPM bit: "When the HPM bit = "1", (L+R)/2 signals are output to Lch and Rch of the Headphone-Amp. Both PMHPL and PMHPR bits should be "1" when HPM bit is "1". → "When the HPM bit = "1", DAC output signal is output to Lch and Rch of the Headphone-Amp as (L+R)/2."
			87	Control Sequence (Clock Setup: Ext Slave Mode) MCLK Frequency: 1024fs → 256fs Addr=05H: Data=27H → 00H
			88	Control Sequence (Clock Setup: Ext Master Mode) MCLK Frequency: 1024fs → 256fs Addr=05H: Data=27H → 00H
			91	Control Sequence (Headphone Playback) Digital Volume Level: 0dB → –8dB Addr=0EH: Data=14H → 19H Figure 81: (12) Addr=0EH: Data=00H → 11H

Date (YY/MM/DD)	Revision	Reason	Page	Contents
06/10/24	01	Error correct	94	Control Sequence (Stop of Clock: PLL Master Mode) MCKO bits = “H” or “L” → “1” or “0”

IMPORTANT NOTICE

- These products and their specifications are subject to change without notice. Before considering any use or application, consult the Asahi Kasei Microsystems Co., Ltd. (AKM) sales office or authorized distributor concerning their current status.
- AKM assumes no liability for infringement of any patent, intellectual property, or other right in the application or use of any information contained herein.
- Any export of these products, or devices or systems containing them, may require an export license or other official approval under the law and regulations of the country of export pertaining to customs and tariffs, currency exchange, or strategic materials.
- AKM products are neither intended nor authorized for use as critical components in any safety, life support, or other hazard related device or system, and AKM assumes no responsibility relating to any such use, except with the express written consent of the Representative Director of AKM. As used here:
  a. A hazard related device or system is one designed or intended for life support or maintenance of safety or for applications in medicine, aerospace, nuclear energy, or other fields, in which its failure to function or perform may reasonably be expected to result in loss of life or in significant injury or damage to person or property.
  b. A critical component is one whose failure to function or perform may reasonably be expected to result, whether directly or indirectly, in the loss of the safety or effectiveness of the device or system containing it, and which must therefore meet very high standards of performance and reliability.
- It is the responsibility of the buyer or distributor of an AKM product who distributes, disposes of, or otherwise places the product with a third party to notify that party in advance of the above content and conditions, and the buyer or distributor agrees to assume any and all responsibility and liability for and hold AKM harmless from any and all claims arising from the use of said product in the absence of such notification.