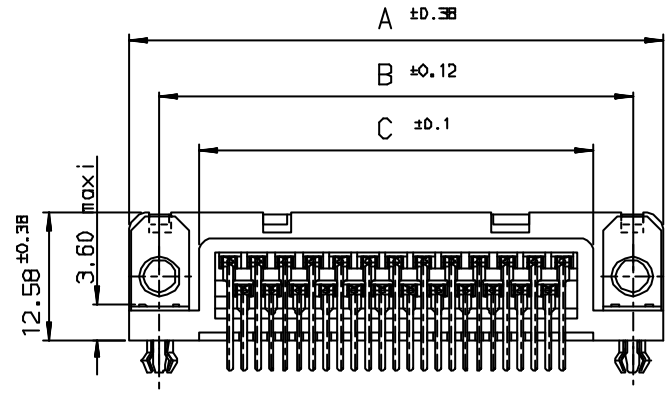

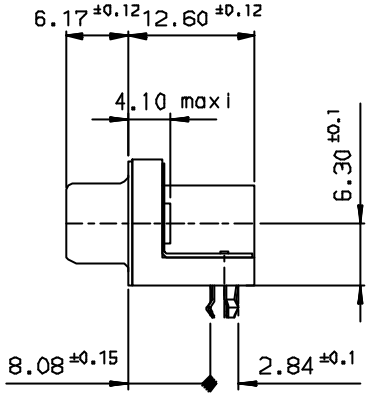

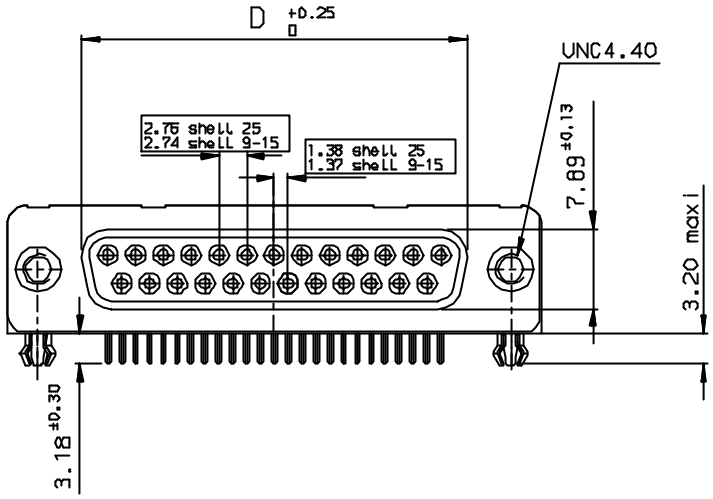

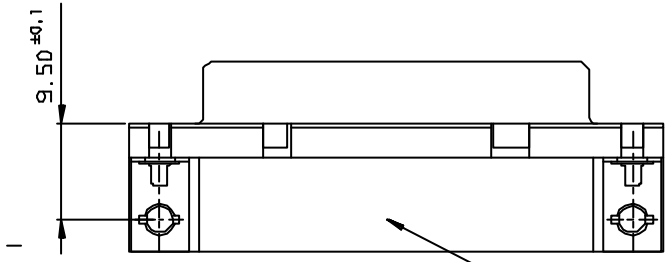

Part Number & Date Code Printing

Pull parts						
SHELL	A±0.38	B±0.12	C±0.10	D±0.25	E±0.07	PART NUMBER
09	30.81	24.99	16.96	16.21	10.96	D09S33E4GX00**
15	39.14	33.32	25.18	24.54	19.18	D15S33E4GX00**
25	53.03	47.04	39.12	38.25	33.12	D25S33E4GX00**

GENERAL CHARACTERISTICS & RoHS : SEE DRAWING C01-8646-0000

LF FOR LEAD FREE

PC card drilling dimensions(after plating)

(thickness 1.60±0.20mm)

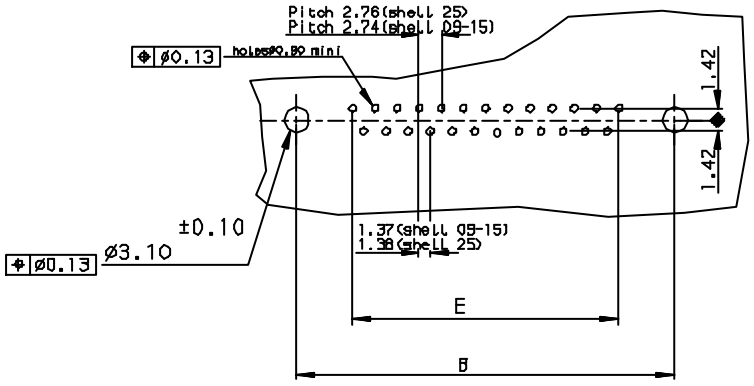

Ltr	Eco no	Dr	date
e	105-0124	JS	27\7\05

Dr JOHN SLEEBA	14\10\94	Product Family D-SUB	Size A3
Eng GEORGE VJ	14\10\94	Spec ref	Scale
Chr GEORGE VJ	27\7\05	Material	ECN
Appr K Somasundaram	27\7\05		

Tolerance LINEAR ±0.1 ANGULAR ±1°

Projection

MM

Title: SOCKET CONNECT.DELTA D RIGHT ANGLE WITH NUT,HARPOON AND METAL PLATE

Dwg no: C01-8646-0146

Rev. e

Catalog no: DELTA-D

CUSTOMER COPY

Sheet 1 of 1

INDEX	DATE	REVISION DESCRIPTION
e	27\7\05	LEAD FREE DETAILS ADDED

Tous droits strictement reserves. Reproduction ou communication a des tiers interdites sous quelque forme que ce soit sans autorisation ecrite de Propriete de a FCI. Droits de reproduction FCI.

All rights strictly reserved. Reproduction or issue to third parties in any form whatsoever is not permitted without written authority from the proprietor. Property of FCI. Copyright FCI.

PDM: Rev:E STATUS Released Printed: Jul 06, 2006