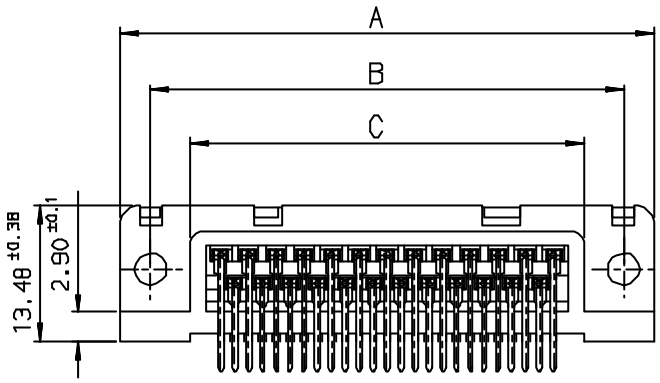

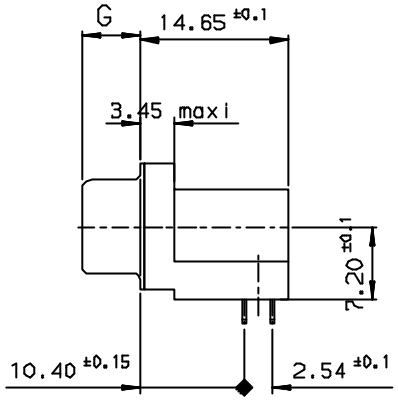

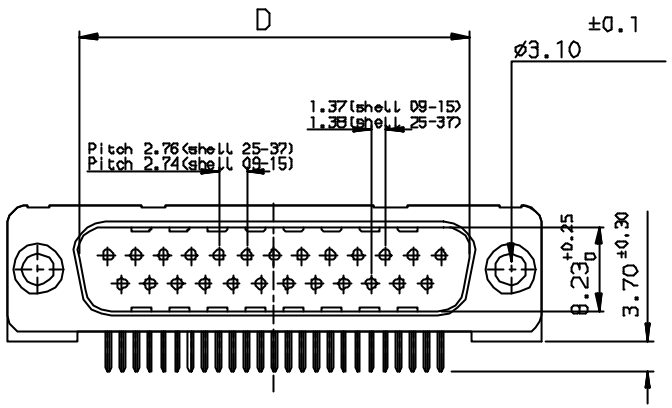

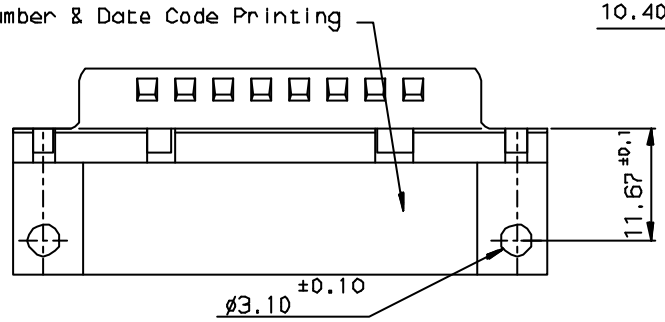

PC card drilling dimensions(after plating)

(thickness 1.60±0.20mm)

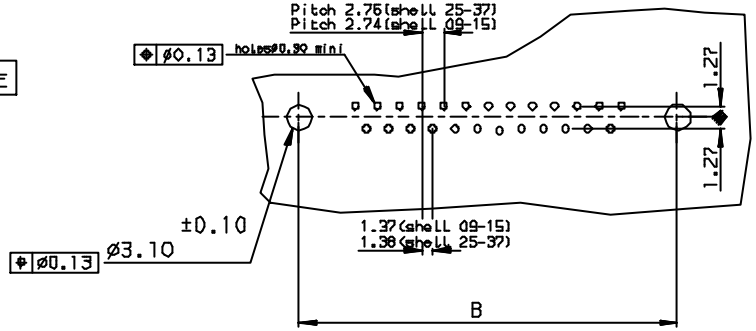

LF FOR LEAD FREE

SHELL	A±0.38	B±0.12	C±0.10	D±0.25	G±0.25	PART NUMBER
09	30.81	24.99	16.96	16.79	5.90	DD9P13B*PA0D**
15	39.14	33.32	25.18	25.12	5.90	D15P13B*PA0D**
25	53.03	47.04	39.12	38.84	5.70	D25P13B*PA0D**
37	69.32	63.50	55.68	55.30	5.70	D37P13B*PA0D**

Plating: 4 --> flash AU

Plating: 6 --> 0.76µ AU

REQUIREMENTS

Technical characteristics:

Shell:steel tin plated

Insulators:self-extinguishing black polyster,ULclass94V0

Contacts size 20:brass,gold on mating end,bright tin on termination end over nickel on entire contact

Cycles :500 mini for plating 6

:200 mini for plating 4

Electrical characteristics:

max.current rating:5A

Test voltage:1000V

Rated voltage:300V

Contact resistance:<15mΩ

Shell resistance:<5mΩ

Insulation resistance:>5000MΩ

Climatic characteristics:

Operating temperature range:-55°c +125°c

Dimensions:

in accordance with MIL-C-24308

FOR ROHS DETAILS REFER DWG.NO:C01-8646-0000

Ltr	Eco no	Dr	date
e	105-0124	JS	27\7\05

INDEX	DATE	REVISION DESCRIPTION
e	27\7\05	LEAD FREE DETAILS ADDED

Dr JOHN SLEEBA	19\4\93	Product Family D-SUB	Size A3
Eng GEORGE VJ	19\4\93	Spec ref	Scale
Chr GEORGE VJ	27\7\05	Material	ECN
Appr K Somasundaram	27\7\05		

Tolerance LINEAR ±0.1 ANGULAR ±1°

Projection

MM

Title: MALE CONNECT.DELTA D right angle spill without accessories.

Dwg no: C01-8646-0162

Rev. e

Catalog no: DELTA-D

CUSTOMER COPY

Sheet 1 of 1

Tous droits strictement reservés. Reproduction ou communication a des tiers interdite sous quelque forme que ce soit sans autorisation écrite de Propriété de la FCI. Droits de reproduction FCI.

All rights strictly reserved. Reproduction or issue to third parties in any form whatsoever is not permitted without written authority from the proprietor. Property of FCI. Copyright FCI.

PDM: Rev:E STATUS:Released Printed: Nov 25, 2005