KEMET

Ceramic Leaded Capacitors

F-3101F 06/05

INDEX

Multilayer Ceramic Capacitors/Axial & Radial — Page

General Information . . . 3

Conformally Coated/Axial & Radial

Performance Characteristics

General Specifications . . . 4

"Aximax" Conformally Coated Axial

Outline Drawing . . . 5
Dimensions . . . 5
Ordering Information . . . 5
Marking . . . 5
Part Number Reference . . . 6-8

"Golden Max" Conformally Coated Radial

Outline Drawing . . . 9
Dimensions . . . 9
Ordering Information . . . 9
Optional Lead Configurations . . . 10
Marking . . . 11
Part Number Reference . . . 11-14

"High Voltage Golden Max" Conformally Coated Radial

Outline Drawing . . . 15
Dimensions . . . 15
Ordering Information . . . 15
Marking . . . 15
Part Number Reference . . . 16-19

Molded/Axial & Radial

Performance Characteristics

General Specifications . . . 20

Ceramic Molded Standard/Axial & Radial

Outline Drawing . . . 21
Dimensions . . . 21
Ordering Information . . . 22
Marking . . . 22
Part Number Reference . . . 23-26

MIL-PRF-20

Outline Drawing . . . 27
Dimensions . . . 27
Ordering Information . . . 28
Marking . . . 28
Part Number Reference . . . 29-32

MIL-C-11015 (CK) & MIL-PRF-39014 (CKR)

Outline Drawing . . . 33
Dimensions . . . 33
Ordering Information . . . 34
Marking . . . 34
Part Number Reference . . . 35-38

Axial Tape & Reel Packaging Specifications . . . 39

Radial Tape & Reel Packaging Specifications . . . 40

Leaded Packaging Quantities . . . 41

Application Notes for Multilayer Ceramic Capacitors . . . 42-46

NOTICE

Although the information in this catalog has been carefully checked for accuracy, and is believed to be correct and current, no warranty, either express or implied, is made as to either its applicability to, or its compatibility with, specific requirements; nor does KEMET Electronics Corporation assume any responsibility for correctness of this information, nor for damages consequent to its use. All design characteristics, specifications, tolerances, and the like are subject to change without notice.

Multilayer ceramic capacitors are available in a variety of physical sizes and configurations, including leaded devices and surface mounted chips. Leaded styles include molded and conformally coated parts with axial and radial leads. However, the basic capacitor element is similar for all styles. It is called a chip and consists of formulated dielectric materials which have been cast into thin layers, interspersed with metal electrodes alternately exposed on opposite edges of the laminated structure. The entire structure is fired at high temperature to produce a monolithic block which provides high capacitance values in a small physical volume. After firing, conductive terminations are applied to opposite ends of the chip to make contact with the exposed electrodes. Termination materials and methods vary depending on the intended use.

TEMPERATURE CHARACTERISTICS

Ceramic dielectric materials can be formulated with a wide range of characteristics. The EIA standard for ceramic dielectric capacitors (RS-198) divides ceramic dielectrics into the following classes:

Class I: Temperature compensating capacitors, suitable for resonant circuit application or other applications where high Q and stability of capacitance characteristics are required. Class I capacitors have predictable temperature coefficients and are not effected by voltage, frequency or time. They are made from materials which are not ferro-electric, yielding superior stability but low volumetric efficiency. Class I capacitors are the most stable type available, but have the lowest volumetric efficiency.

Class II: Stable capacitors, suitable for bypass or coupling applications or frequency discriminating circuits where Q and stability of capacitance characteristics are not of major importance. Class II capacitors have temperature characteristics of ± 15% or less. They are made from materials which are ferro-electric, yielding higher volumetric efficiency but less stability. Class II capacitors are affected by temperature, voltage, frequency and time.

Class III: General purpose capacitors, suitable for by-pass coupling or other applications in which dielectric losses, high insulation resistance and stability of capacitance characteristics are of little or no importance. Class III capacitors are similar to Class II capacitors except for temperature characteristics, which are greater than ± 15%. Class III capacitors have the highest volumetric efficiency and poorest stability of any type.

KEMET leaded ceramic capacitors are offered in the three most popular temperature characteristics:

C0G: Class I, with a temperature coefficient of 0 ± 30 ppm per degree C over an operating temperature range of - 55°C to + 125°C (Also known as “NP0”).

X7R: Class II, with a maximum capacitance change of ± 15% over an operating temperature range of - 55°C to + 125°C.

Z5U: Class III, with a maximum capacitance change of + 22% - 56% over an operating temperature range of + 10°C to + 85°C.

Specified electrical limits for these three temperature characteristics are shown in Table 1.

SPECIFIED ELECTRICAL LIMITS

PARAMETER	TEMPERATURE CHARACTERISTICS		
	C0G	X7R	Z5U
Dissipation Factor: Measured at following conditions: C0G — 1 kHz and 1 vrms if capacitance > 1000 pF 1 MHz and 1 vrms if capacitance ≤ 1000 pF X7R — 1 kHz and 1 vrms* or if extended cap range 0.5 vrms Z5U — 1 kHz and 0.5 vrms	0.15%	2.5%	4.0%
Dielectric Strength: 2.5 times rated DC voltage.	Pass Subsequent IR Test		
Insulation Resistance (IR): At rated DC voltage, whichever of the two is smaller	1,000 MΩ-μF or 100 GΩ	1,000 MΩ-μF or 100 GΩ	1,000 MΩ-μF or 10 GΩ
Temperature Characteristics: Range, °C Capacitance Change without DC voltage	-55 to +125 0 ± 30 ppm/°C	-55 to +125 ±15%	+10 to +85 +22%, -56%

* 1 MHz and 1 vrms if capacitance ≤ 100 pF on military product.

Table I

GENERAL SPECIFICATIONS

Working Voltage:

	Axial (WVDC)	Radial (WVDC)
C0G	50 & 100	50, 100, 200, 500, 1k, 1.5k, 2k, 2.5k, 3k
X7R	50 & 100	50, 100, 200, 500, 1k, 1.5k, 2k, 2.5k, 3k
Z5U	50 & 100	50 & 100

Temperature Characteristics:
C0G – 0 ± 30 PPM / °C from - 55°C to + 125°C (1)
X7R – ± 15% from - 55°C to + 125°C
Z5U – + 22% / -56% from + 10°C to + 85°C

Capacitance Tolerance:
C0G – ±0.5pF, ±1%, ±2%, ±5%, ±10%
X7R – ±10%, ±20%, +80% / -20%, +100% / -0%
Z5U – ±20%, +80% / -20%

Construction:
Epoxy encapsulated - meets flame test requirements of UL Standard 94V-0.
High-temperature solder - meets EIA RS-198, Method 302, Condition B (260°C for 10 seconds)

Lead Material:
100% matte tin (Sn) with nickel (Ni) underplate and steel core.

Solderability:
EIA RS-198, Method 301, Solder Temperature: 230°C ±5°C.
Dwell time in solder = 7 ± ½ seconds.

Terminal Strength:
EIA RS-198, Method 303, Condition A (2.2kg)

ELECTRICAL

Capacitance @ 25°C:
Within specified tolerance and following test conditions.
C0G – > 1000pF with 1.0 vrms @ 1 kHz
≤ 1000pF with 1.0 vrms @ 1 MHz
X7R – with 1.0 vrms @ 1 kHz
Z5U – with 1.0 vrms @ 1 kHz

Dissipation Factor @ 25°C:
Same test conditions as capacitance.
C0G – 0.15% maximum
X7R – 2.5% maximum
Z5U – 4.0% maximum

Insulation Resistance @ 25°C:
EIA RS-198, Method 104, Condition A <1kV
C0G – 100k Megohm or 1000 Megohm x µF, whichever is less.
≤500V test @ rated voltage, ≥1kV test @ 500V
X7R – 100k Megohm or 1000 Megohm x µF, whichever is less.
≤500V test @ rated voltage, ≥1kV test @ 500V
Z5U – 10k Megohm or 1000 Megohm x µF, whichever is less.

Dielectric Withstanding Voltage:
EIA RS-198, Method 103
≤200V test @ 250% of rated voltage for 5 seconds with current limited to 50mA.
500V test @ 150% of rated voltage for 5 seconds with current limited to 50mA.
≥1000V test @ 120% of rated voltage for 5 seconds with current limited to 50mA.

ENVIRONMENTAL

Vibration:
EIA RS-198, Method 304, Condition D (10-2000Hz; 20g)
Shock:
EIA RS-198, Method 305, Condition I (100g)

Life Test:
EIA RS-198, Method 201, Condition D.
≤ 200V
C0G – 200% of rated voltage @ +125°C
X7R – 200% of rated voltage @ +125°C
Z5U – 200% of rated voltage @ +85°C
≥ 500V
C0G – rated voltage @ +125°C
X7R – rated voltage @ +125°C

Post Test Limits @ 25°C are:
Capacitance Change:
C0G (≤ 200V) – +3% or 0.25pF, whichever is greater.
C0G (≥ 500V) – +3% or 0.50pF, whichever is greater.
X7R – + 20% of initial value (2)
Z5U – + 30% of initial value (2)
Dissipation Factor:
C0G – 0.15% maximum
X7R – 2.5% maximum
Z5U – 4.0% maximum
Insulation Resistance:
C0G – 10k Megohm or 100 Megohm x µF, whichever is less.
≥1kV tested @ 500V.
X7R – 10k Megohm or 100 Megohm x µF, whichever is less.
≥1kV tested @ 500V.
Z5U – 1k Megohm or 100 Megohm x µF, whichever is less.

Moisture Resistance:
EIA RS-198, Method 204, Condition A (10 cycles without applied voltage.)
Post Test Limits @ 25°C are:
Capacitance Change:
C0G (≤ 200V) – +3% or 0.25pF, whichever is greater.
C0G (≥ 500V) – +3% or 0.50pF, whichever is greater.
X7R – + 20% of initial value (2)
Z5U – + 30% of initial value (2)
Dissipation Factor:
C0G – 0.25% maximum
X7R – 3.0% maximum
Z5U – 4.0% maximum
Insulation Resistance:
C0G – 10k Megohm or 100 Megohm x µF, whichever is less.
≤500V test @ rated voltage, ≥1kV test @ 500V.
X7R – 10k Megohm or 100 Megohm x µF, whichever is less.
≥500V test @ rated voltage, >1kV test @ 500V.
Z5U – 1k Megohm or 100 Megohm x µF, whichever is less.

Thermal Shock:
EIA RS-198, Method 202, Condition B (C0G & X7R: -55°C to +125°C); Condition A (Z5U: -55°C to 85°C)

(1) +53 PPM -30 PPM/ °C from +25°C to -55°C, + 60 PPM below 10pF.
(2) X7R and Z5U dielectrics exhibit aging characteristics; therefore, it is highly recommended that capacitors be deaged for 2 hours at 150°C and stabilized at room temperature for 48 hours before capacitance measurements are made.

© KEMET Electronics Corporation, P.O. Box 5928, Greenville, S.C. 29606, (864) 963-6300

CAPACITOR OUTLINE DRAWING

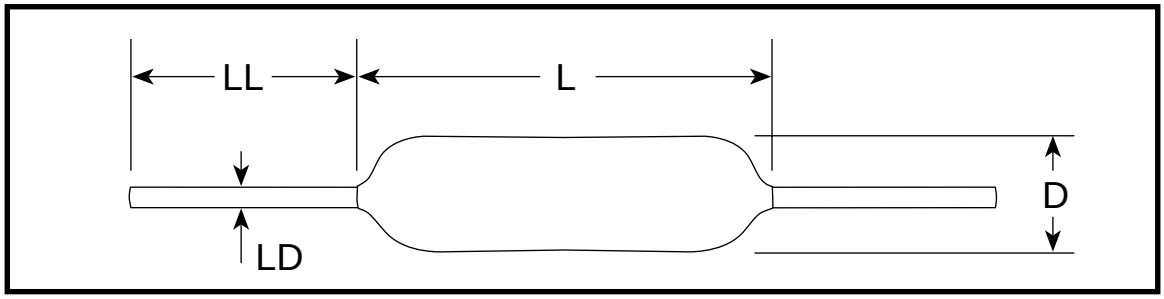

MAXIMUM DIMENSIONS—INCHES & (MILLIMETERS)

STYLE	L MAX	D MAX	LD +.001, -.003 (+.025, -.076)	LL MIN
C410	.170 (4.32)	.100 (2.54)	.020 (.51)	1.0 (25.4)
C412	.170 (4.32)	.120 (3.05)	.020 (.51)	1.0 (25.4)
C420	.260 (6.60)	.100 (2.54)	.020 (.51)	1.0 (25.4)
C430	.290 (7.37)	.150 (3.81)	.020 (.51)	1.0 (25.4)
C440	.400 (10.16)	.150 (3.81)	.020 (.51)	1.0 (25.4)

ORDERING INFORMATION

C 410 C 104 M 5 U 5 T A*

CERAMIC

CASE SIZE
(See Table of Dimensions above)

SPECIFICATION
C — Standard

CAPACITANCE
Expressed in Picofarad Code (pF)
First Two Digits — Significant Figures
Third Digit — Number of Zeros

CAPACITANCE TOLERANCE
J — ±5%
K — ±10%
M — ±20%
Z — –20 +80%

FAILURE RATE
A — Not Applicable

TERM MATERIAL
T — 100% tin
H — SnPb
C — 100% Sn
(Not recommended for new design)

INTERNAL CONSTRUCTION
5 — Standard

DIELECTRIC
EIA Designation
G — C0G (NPO) — Ultra-Stable
R — X7R — Stable
U — Z5U — General Purpose

RATED VOLTAGE
1 — 100 Volts
5 — 50 Volts
2 — 200 Volts

***Part Number Example: C410C104M5U5CA (14 digits – no spaces)**

MARKING INFORMATION

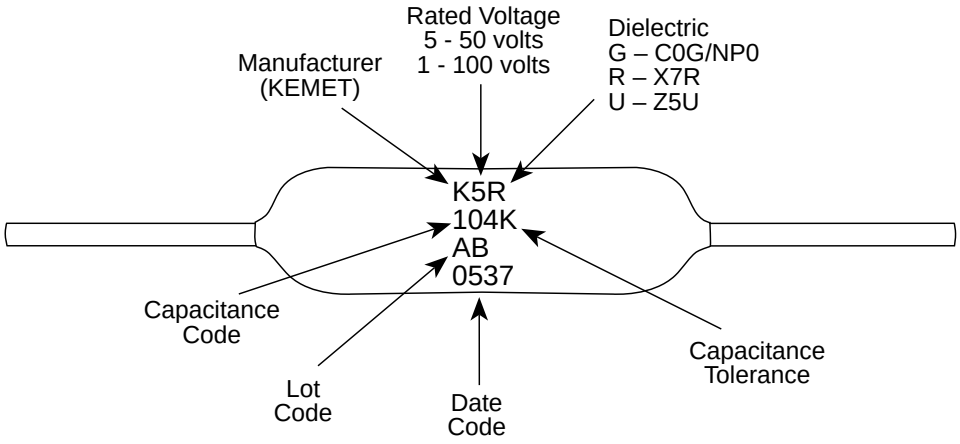

RATINGS & PART NUMBER REFERENCE
ULTRA-STABLE TEMPERATURE CHARACTERISTIC – COG/NPO

		Style	C410			C412			C420			C430			C440		
Cap	Cap Code	Cap Tol	WVDC			WVDC			WVDC			WVDC			WVDC		
			50	100	200	50	100	200	50	100	200	50	100	200	50	100	200
1.0pF	109	J,K,M															
1.5	159	J,K,M															
1.8	189	J,K,M															
2.2	229	J,K,M															
2.7	279	J,K,M															
3.3	339	J,K,M															
3.9	399	J,K,M															
4.7	479	J,K,M															
5.6	569	J,K,M															
6.8	689	J,K,M															
8.2	829	J,K,M															
10	100	J,K,M															
12	120	J,K,M															
15	150	J,K,M															
18	180	J,K,M															
22	220	J,K,M															
27	270	J,K,M															
33	330	J,K,M															
39	390	J,K,M															
47	470	J,K,M															
56	560	J,K,M															
68	680	J,K,M															
82	820	J,K,M															
100	101	J,K,M															
120	121	J,K,M															
150	151	J,K,M															
180	181	J,K,M															
220	221	J,K,M															
270	271	J,K,M															
330	331	J,K,M															
390	391	J,K,M															
470	471	J,K,M															
560	561	J,K,M															
680	681	J,K,M															
820	821	J,K,M															
1000	102	J,K,M															
1200	122	J,K,M															
1500	152	J,K,M															
1800	182	J,K,M															
2200	222	J,K,M															
2700	272	J,K,M															
3300	332	J,K,M															
3900	392	J,K,M															
4700	472	J,K,M															
5600	562	J,K,M															
6800	682	J,K,M															
8200	822	J,K,M															
.010uF	103	J,K,M															
.012	123	J,K,M															
.015	153	J,K,M															

For packaging information, see pages 39 and 41.

© KEMET Electronics Corporation, P.O. Box 5928, Greenville, S.C. 29606, (864) 963-6300

RATINGS & PART NUMBER REFERENCE
STABLE TEMPERATURE CHARACTERISTIC – X7R

		Style	C410			C412			C420			C430			C440		
Cap	Cap Code	Cap Tol	WVDC			WVDC			WVDC			WVDC			WVDC		
			50	100	200	50	100	200	50	100	200	50	100	200	50	100	200
10pF	100	K,M															
12	120	K,M															
15	150	K,M															
18	180	K,M															
22	220	K,M															
27	270	K,M															
33	330	K,M															
39	390	K,M															
47	470	K,M															
56	560	K,M															
68	680	K,M															
82	820	K,M															
100	101	K,M															
120	121	K,M															
150	151	K,M															
180	181	K,M															
220	221	K,M															
270	271	K,M															
330	331	K,M															
390	391	K,M															
470	471	K,M															
560	561	K,M															
680	681	K,M															
820	821	K,M															
1000	102	K,M															
1200	122	K,M															
1500	152	K,M															
1800	182	K,M															
2200	222	K,M															
2700	272	K,M															
3300	332	K,M															
3900	392	K,M															
4700	472	K,M															
5600	562	K,M															
6800	682	K,M															
8200	822	K,M															
.010uF	103	K,M															
.012	123	K,M															
.015	153	K,M															
.018	183	K,M															
.022	223	K,M															
.027	273	K,M															
.033	333	K,M															
.039	393	K,M															
.047	473	K,M															
.056	563	K,M															
.068	683	K,M															
.082	823	K,M															
.10	104	K,M															
.12	124	K,M															
.15	154	K,M															
.18	184	K,M															
.22	224	K,M															
.27	274	K,M															
.33	334	K,M															
.39	394	K,M															
.47	474	K,M															
.56	564	K,M															
.68	684	K,M															

For packaging information, see pages 39 and 41.

RATINGS & PART NUMBER REFERENCE
GENERAL PURPOSE TEMPERATURE CHARACTERISTIC – Z5U

		Style	C410			C412			C420			C430			C440		
Cap	Cap Code	Cap Tol	WVDC			WVDC			WVDC			WVDC			WVDC		
			50	100	200	50	100	200	50	100	200	50	100	200	50	100	200
1000pF	102	M,Z															
1200	122	M,Z															
1500	152	M,Z															
1800	182	M,Z															
2200	222	M,Z															
2700	272	M,Z															
3300	332	M,Z															
3900	392	M,Z															
4700	472	M,Z															
5600	562	M,Z															
6800	682	M,Z															
8200	822	M,Z															
.010uF	103	M,Z															
.012	123	M,Z															
.015	153	M,Z															
.018	183	M,Z															
.022	223	M,Z															
.027	273	M,Z															
.033	333	M,Z															
.039	393	M,Z															
.047	473	M,Z															
.056	563	M,Z															
.068	683	M,Z															
.082	823	M,Z															
.10	104	M,Z															
.12	124	M,Z															
.15	154	M,Z															
.18	184	M,Z															
.22	224	M,Z															
.27	274	M,Z															
.33	334	M,Z															
.39	394	M,Z															
.47	474	M,Z															
.56	564	M,Z															
.68	684	M,Z															
.82	824	M,Z															
1.0	105	M,Z															
1.2	125	M,Z															
1.5	155	M,Z															
1.8	185	M,Z															
2.2	225	M,Z															

For packaging information, see pages 39 and 41.

© KEMET Electronics Corporation, P.O. Box 5928, Greenville, S.C. 29606, (864) 963-6300

STANDARD LEAD CONFIGURATION — OUTLINE DRAWINGS

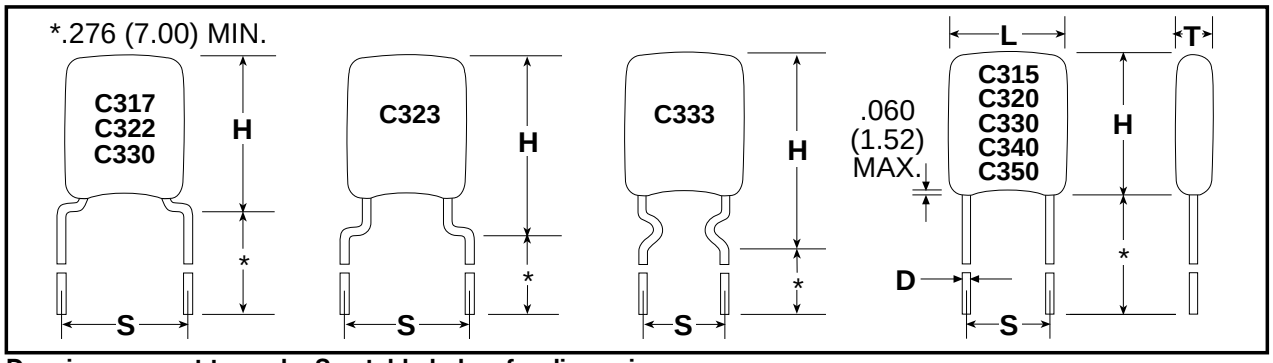

Drawings are not to scale. See table below for dimensions.
See page 10 for optional lead configurations.

DIMENSIONS — INCHES & MILLIMETERS

Case Size	L Max.	H. Max	Standard T Max.	High Voltage T Max.	S(1) ±.030 (.78)	D +.004(.10) -.001(.025)
C315	0.150 (3.81)	0.210 (5.33)	0.100	0.150	0.100 (2.54)	0.020 (.51)
C317	0.150 (3.81)	0.230 (5.84)	0.100	0.150	0.200 (5.08)	0.020 (.51)
C320	0.200 (5.08)	0.260 (6.60)	0.125	0.200	0.100 (2.54)	0.020 (.51)
C322	0.200 (5.08)	0.260 (6.60)	0.125	0.200	0.200 (5.08)	0.020 (.51)
C323	0.200 (5.08)	0.320 (8.13)	0.125	0.200	0.200 (5.08)	0.020 (.51)
C330	0.300 (7.62)	0.360 (9.14)	0.150	0.250	0.200 (5.08)	0.020 (.51)
C333	0.300 (7.62)	0.390 (9.91)	0.150	0.250	0.200 (5.08)	0.020 (.51)
C340	0.400 (10.16)	0.460 (11.68)	0.150	0.270	0.200 (5.08)	0.020 (.51)
C350	0.500 (12.70)	0.560 (14.22)	0.200	0.270	0.400 (10.16)	0.025 (.64)

NOTE: 1 inch = 25.4 mm.
NOTE: (1) Measured at seating plane.

ORDERING INFORMATION

C 320 C 102 M 1 R 5 T A*

CERAMIC

CASE SIZE
(See Table Above)

SPECIFICATION
C — Standard

CAPACITANCE, CODE
Expressed in Picofarads (pF)
First Two Digits — Significant Figures
Third Digit — Number of Zeros (Use 9 for 1.0 thru 9.9 pF. Example: 2.2pF — 229)

CAPACITANCE TOLERANCE
D — ±0.5 pF
F — ±1%
G — ±2%
J — ±5%
K — ±10%
M — ±20%
P — 0%, +100%
Z — -20, +80%

FAILURE RATE
A — Not Applicable

TERMINATION MATERIAL
T — 100% Tin
H — SnPb
C — 100% Sn
(Not recommended for new design)

INTERNAL CONSTRUCTION
5 — Standard

DIELECTRIC
EIA Designation
G — C0G (NP0) — Ultra-Stable
R — X7R — Stable
U — Z5U — General Purpose

RATED VOLTAGE
2 — 200
1 — 100
5 — 50
C — 500
D —1000
F — 1500
G — 2000
Z — 2500
H — 3000

***Part Number Example: C320C102M1R5CA (14 digits – no spaces)**

For packaging information, see pages 40, and 41.

© KEMET Electronics Corporation, P.O. Box 5928, Greenville, S.C. 29606, (864) 963-6300

OPTIONAL CONFIGURATIONS BY LEAD SPACING

The preferred lead wire configurations are shown on page 9. However, additional configurations are available. All available options, including those on page 9, are shown below grouped by lead spacing.

Lead Spacing .100" ± .030

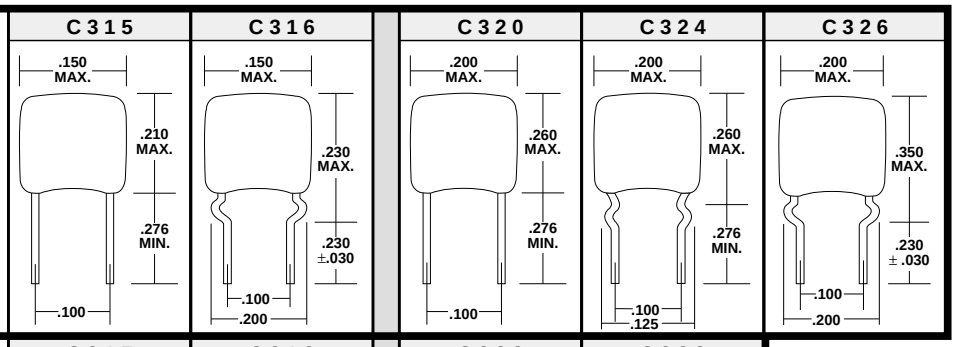

Lead Spacing .200" ± .030

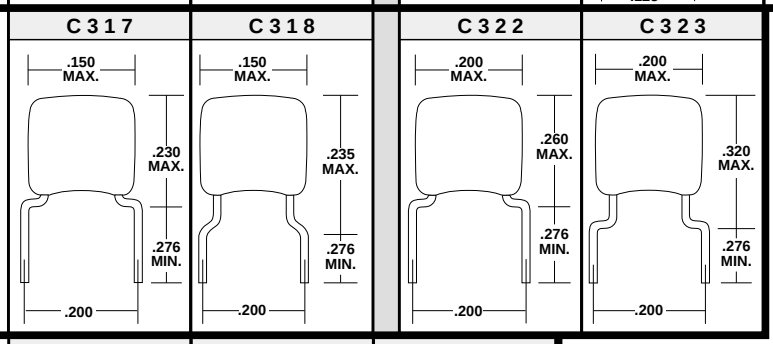

Lead Spacing .200" ± .030

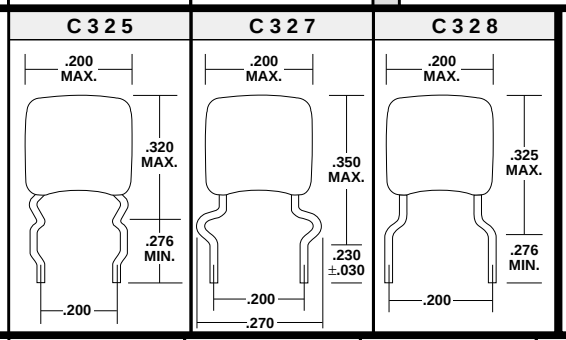

Lead Spacing .200" ± .030

Note: C330 Shoulder bend leads:
X7R/50V 683-105
Z5U/100V 683-334

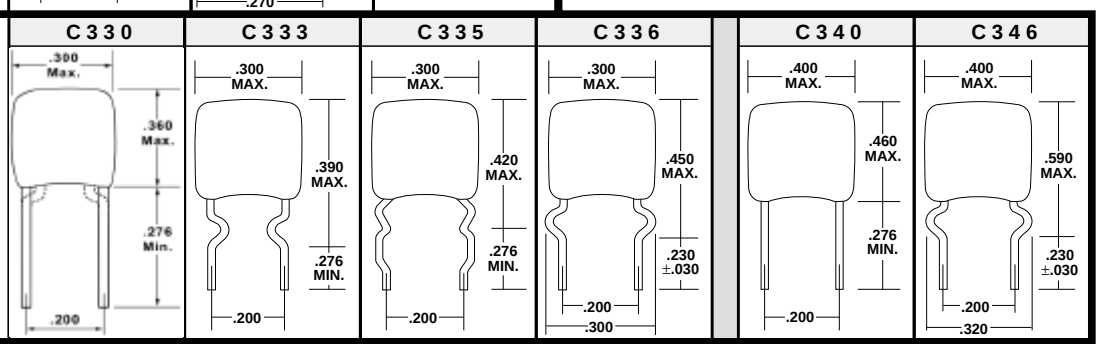

Lead Spacing .250" ± .030 (Available in bulk only)

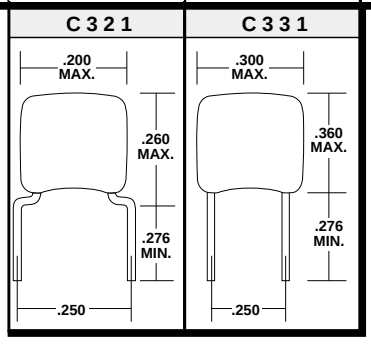

Lead Spacing .400" ± .030 (Available in bulk only)

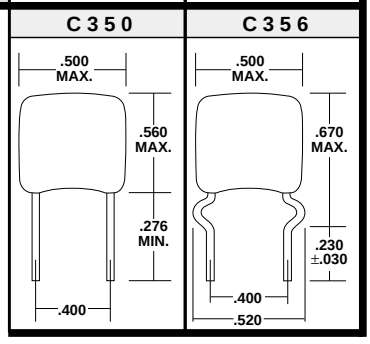

Note: Non-standard lead lengths are available in bulk only.

© KEMET Electronics Corporation, P.O. Box 5928, Greenville, S.C. 29606, (864) 963-6300

CAPACITOR MARKINGS

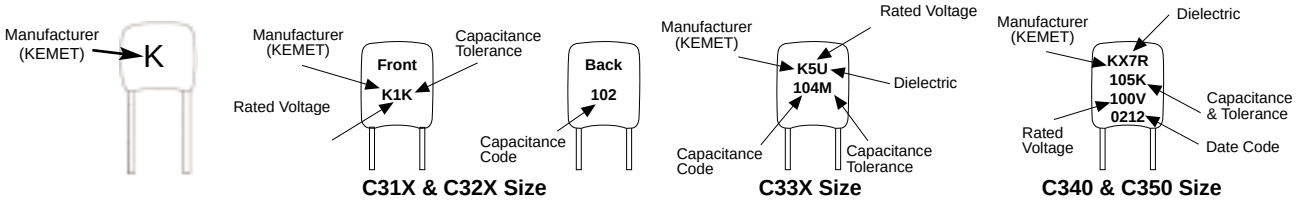

C31X & C32X Size | C33X Size | C340 & C350 Size

RATINGS & PART NUMBER REFERENCE: ULTRA-STABLE TEMPERATURE CHARACTERISTICS – C0G/NPO

		Style	C31X					C32X							C33X									C34X							C35X						
Cap	Cap Code	Cap Tol	WVDC					WVDC							WVDC									WVDC							WVDC						
			50	100	200	500	1k	50	100	200	500	1k	1.5k	2k	50	100	200	500	1k	1.5k	2k	2.5k	3k	50	100	200	500	1k	2k	3k	50	100	200	500	1k	2k	3k
1.0pF	109	D																																			
1.1	119	D																																			
1.2	129	D																																			
1.3	139	D																																			
1.5	159	D																																			
1.6	169	D																																			
1.8	189	D																																			
2.0	209	D																																			
2.2	229	D																																			
2.4	249	D																																			
2.7	279	D																																			
3.0	309	D																																			
3.3	339	D																																			
3.6	369	D																																			
3.9	399	D																																			
4.3	439	D																																			
4.7	479	D																																			
5.1	519	D																																			
5.6	569	D																																			
6.2	629	D																																			
6.8	689	D																																			
7.5	759	D																																			
8.2	829	D																																			
9.1	919	D																																			
10	100	J,K																																			
11	110	J,K																																			
12	120	J,K																																			
13	130	J,K																																			
15	150	J,K																																			
16	160	J,K																																			
18	180	J,K																																			
20	200	J,K																																			
22	220	J,K																																			
24	240	G,J,K																																			
27	270	G,J,K																																			
30	300	G,J,K																																			
33	330	G,J,K																																			
36	360	G,J,K																																			
39	390	G,J,K																																			
43	430	G,J,K																																			
47	470	G,J,K																																			
51	510	G,J,K																																			
56	560	F,G,J																																			
62	620	F,G,J																																			
68	680	F,G,J																																			
75	750	F,G,J																																			
82	820	F,G,J																																			
91	910	F,G,J																																			

For packaging information, see pages 40 and 41.

RATINGS & PART NUMBER REFERENCE: ULTRA-STABLE TEMPERATURE CHARACTERISTICS — C0G/NPO CONT.

		Style	C31X					C32X							C33X									C34X							C35X						
Cap	Cap Code	Cap Tol	WVDC					WVDC							WVDC									WVDC							WVDC						
			50	100	200	500	1k	50	100	200	500	1k	1.5k	2k	50	100	200	500	1k	1.5k	2k	2.5k	3k	50	100	200	500	1k	2k	3k	50	100	200	500	1k	2k	3k
100	101	F,G,J																																			
110	111	F,G,J																																			
120	121	F,G,J																																			
130	131	F,G,J																																			
150	151	F,G,J																																			
160	161	F,G,J																																			
180	181	F,G,J																																			
200	201	F,G,J																																			
220	221	F,G,J																																			
240	241	F,G,J																																			
270	271	F,G,J																																			
300	301	F,G,J																																			
330	331	F,G,J																																			
360	361	F,G,J																																			
390	391	F,G,J																																			
430	431	F,G,J																																			
470	471	F,G,J																																			
510	511	F,G,J																																			
560	561	F,G,J																																			
620	621	F,G,J																																			
680	681	F,G,J																																			
750	751	F,G,J																																			
820	821	F,G,J																																			
910	911	F,G,J																																			
1000	102	F,G,J																																			
1100	112	F,G,J																																			
1200	122	F,G,J																																			
1300	132	F,G,J																																			
1500	152	F,G,J																																			
1600	162	F,G,J																																			
1800	182	F,G,J																																			
2000	202	F,G,J																																			
2200	222	F,G,J																																			
2400	242	F,G,J																																			
2700	272	F,G,J																																			
3000	302	F,G,J																																			
3300	332	F,G,J																																			
3600	362	F,G,J																																			
3900	392	F,G,J																																			
4300	432	F,G,J																																			
4700	472	F,G,J																																			
5100	512	F,G,J																																			
5600	562	F,G,J																																			
6200	622	F,G,J																																			
6800	682	F,G,J																																			
7500	752	F,G,J																																			
8200	822	F,G,J																																			
9100	912	F,G,J																																			
.010uF	103	F,G,J																																			
.015	123	F,G,J																																			
.015	153	F,G,J																																			
.018	183	F,G,J																																			
.022	223	F,G,J																																			
.027	273	F,G,J																																			
.033	333	F,G,J																																			
.039	393	F,G,J																																			
.047	473	F,G,J																																			
.056	563	F,G,J																																			
.068	683	F,G,J																																			
.082	823	F,G,J																																			
.10	104	F,G,J																																			
.12	124	F,G,J																																			

For packaging information, see pages 40 and 41.

© KEMET Electronics Corporation, P.O. Box 5928, Greenville, S.C. 29606, (864) 963-6300

RATINGS & PART NUMBER REFERENCE: STABLE TEMPERATURE CHARACTERISTICS — X7R

Cap	Cap Code	Cap Tol	C31X					C32X							C33X									C34X							C35X						
		Style																																			
			WVDC					WVDC							WVDC									WVDC							WVDC						
			50	100	200	500	1k	50	100	200	500	1k	1.5k	2k	50	100	200	500	1k	1.5k	2k	2.5k	3k	50	100	200	500	1k	2k	3k	50	100	200	500	1k	2k	3k
10pF	100	K,M,P,Z																																			
12	120	K,M,P,Z																																			
15	150	K,M,P,Z																																			
18	180	K,M,P,Z																																			
22	220	K,M,P,Z																																			
27	270	K,M,P,Z																																			
33	330	K,M,P,Z																																			
39	390	K,M,P,Z																																			
47	470	K,M,P,Z																																			
56	560	K,M,P,Z																																			
68	680	K,M,P,Z																																			
82	820	K,M,P,Z																																			
100	101	K,M,P,Z																																			
120	121	K,M,P,Z																																			
150	151	K,M,P,Z																																			
180	181	K,M,P,Z																																			
220	221	K,M,P,Z																																			
270	271	K,M,P,Z																																			
330	331	K,M,P,Z																																			
390	391	K,M,P,Z																																			
470	471	K,M,P,Z																																			
560	561	K,M,P,Z																																			
680	681	K,M,P,Z																																			
820	821	K,M,P,Z																																			
1000	102	K,M,P,Z																																			
1200	122	K,M,P,Z																																			
1500	152	K,M,P,Z																																			
1800	182	K,M,P,Z																																			
2200	222	K,M,P,Z																																			
2700	272	K,M,P,Z																																			
3300	332	K,M,P,Z																																			
3900	392	K,M,P,Z																																			
4700	472	K,M,P,Z																																			
5600	562	K,M,P,Z																																			
6800	682	K,M,P,Z																																			
8200	822	K,M,P,Z																																			
.010uF	103	K,M,P,Z																																			
.012	123	K,M,P,Z																																			
.015	153	K,M,P,Z																																			
.018	183	K,M,P,Z																																			
.022	223	K,M,P,Z																																			
.027	273	K,M,P,Z																																			
.033	333	K,M,P,Z																																			
.039	393	K,M,P,Z																																			
.047	473	K,M,P,Z																																			
.056	563	K,M,P,Z																																			
.068	683	K,M,P,Z																																			
.082	823	K,M,P,Z																																			
.10	104	K,M,P,Z	#					#																													
.12	124	K,M,P,Z																																			
.15	154	K,M,P,Z																																			
.18	184	K,M,P,Z																																			
.22	224	K,M,P,Z																																			
.27	274	K,M,P,Z																																			
.33	334	K,M,P,Z																																			
.39	394	K,M,P,Z																																			
.47	474	K,M,P,Z																																			
.56	564	K,M,P,Z																																			
.68	684	K,M,P,Z																																			
.82	824	K,M,P,Z																																			
1.0	105	K,M,P,Z																																			
1.2	125	K,M,P,Z																																			
1.5	155	K,M,P,Z																																			
1.8	185	K,M,P,Z																																			
2.2	225	K,M,P,Z																																			
2.7	275	K,M,P,Z																																			
3.3	335	K,M,P,Z																																			
3.9	395	K,M,P,Z																																			
4.7	475	K,M,P,Z																																			
5.6	565	K,M,P,Z																																			
6.8	685	K,M,P,Z																																			

	C330 shoulder bend lead configuration is standard for these cap codes.
#	X7R Dielectric--extended range value--Cap and DF measured @0.5Vrms.

For packaging information, see pages 40 and 41.

Golden Max

RATINGS & PART NUMBER REFERENCE
GENERAL PURPOSE TEMPERATURE CHARACTERISTIC – Z5U

		Style	C31X			C32X			C33X			C34X			C35X		
Cap	Cap Code	Cap Tol	WWDC			WWDC			WWDC			WWDC			WWDC		
			50	100	200	50	100	200	50	100	200	50	100	200	50	100	200
1000pF	102	M,P,Z															
1200	122	M,P,Z															
1500	152	M,P,Z															
1800	182	M,P,Z															
2200	222	M,P,Z															
2700	272	M,P,Z															
3300	332	M,P,Z															
3900	392	M,P,Z															
4700	472	M,P,Z															
5600	562	M,P,Z															
6800	682	M,P,Z															
8200	822	M,P,Z															
.010uF	103	M,P,Z															
.012	123	M,P,Z															
.015	153	M,P,Z															
.018	183	M,P,Z															
.022	223	M,P,Z															
.027	273	M,P,Z															
.033	333	M,P,Z															
.039	393	M,P,Z															
.047	473	M,P,Z															
.056	563	M,P,Z															
.068	683	M,P,Z															
.082	823	M,P,Z															
.10	104	M,P,Z															
.12	124	M,P,Z															
.15	154	M,P,Z															
.18	184	M,P,Z															
.22	224	M,P,Z															
.27	274	M,P,Z															
.33	334	M,P,Z															
.39	394	M,P,Z															
.47	474	M,P,Z															
.56	564	M,P,Z															
.68	684	M,P,Z															
.82	824	M,P,Z															
1.0	105	M,P,Z															
1.2	125	M,P,Z															
1.5	155	M,P,Z															
1.8	185	M,P,Z															
2.2	225	M,P,Z															
2.7	275	M,P,Z															
3.3	335	M,P,Z															
3.9	395	M,P,Z															
4.7	475	M,P,Z															
5.6	565	M,P,Z															
6.8	685	M,P,Z															

C330 shoulder bend lead configuration is standard for these cap codes.

For packaging information, see pages 40 and 41.

© KEMET Electronics Corporation, P.O. Box 5928, Greenville, S.C. 29606, (864) 963-6300

CAPACITOR OUTLINE DRAWING

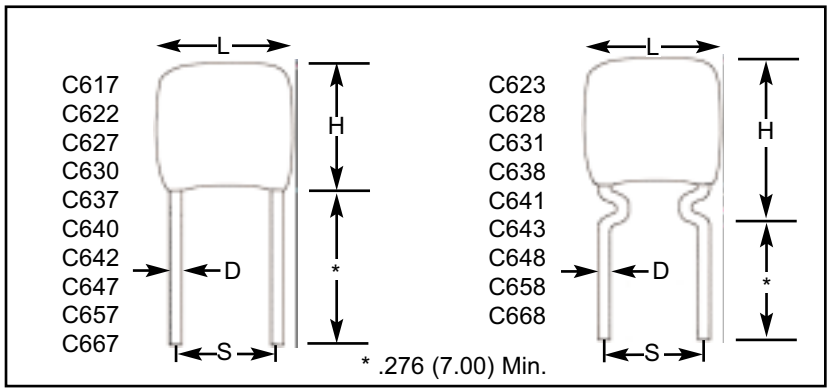

DIMENSIONS - INCHES AND MILLIMETERS

Case Size	L MAX inches (mm)	H MAX inches (mm)	T MAX. inches (mm)	Lead Spacing inches (mm)	LD (Nominal) inches (mm)
C617	.250 (6.35)	.220 (5.59)	.200 (5.08)	.170 (4.32)	.025 (.64)
C622/3	.320 (8.13)	.280(7.11)	.250 (6.35)	.220 (5.59)	.025 (.64)
C627/8	.370 (9.40)	.300 (7.62)	.250 (6.35)	.275 (6.98)	.025 (.64)
C630/1	.450 (11.40)	.220 (5.59)	.200 (5.08)	.300 (7.62)	.025 (.64)
C637/8	.470 (11.90)	.400 (10.20)	.270 (6.89)	.375 (9.52)	.025 (.64)
C640/1	.550 (14.00)	.280 (7.11)	.250 (6.35)	.400 (10.16)	.025 (.64)
C642/3	.500 (12.70)	.560(14.22)	.200 (5.08)	.400 (10.16)	.025 (.64)
C647/8	.570 (14.50)	.500(12.70)	.270 (6.89)	.475 (12.06)	.025 (.64)
C657/8	.670 (17.02	.600 (15.24)	.270 (6.89)	.575 (14.60)	.025 (.64)
C667/8	.770 (19.56)	.720 (18.29)	.270 (6.89)	.675 (17.14)	.025 (.64)

ORDERING INFORMATION

C 622 C 102 M D R 5 T A

CERAMIC

CASE SIZE
See Table Above

SPECIFICATION
C – Standard

CAPACITANCE PICOFARAD CODE
Expressed in picofarads (pF). First two digits represent significant figures. Third digit specifies number of zeros. Use 9 for 1.0 thru 9.9 pF. Example 2.2pF = 229

CAPACITANCE TOLERANCE
C0G: J – ±5%, K – ±10%; M – ±20%
X7R: K – ±10%; M – ±20%; P – 0, +100%; Z – -20,+80%

RATED VOLTAGE

C – 500	G – 2000
D – 1000	Z – 2500
F – 1500	H – 3000

DIELECTRIC
EIA Designation
G – C0G (NP0) - Ultra Stable
R – X7R - Stable

INTERNAL CONSTRUCTION
5 – Standard

TERMINATION MATERIAL
T – Standard

FAILURE RATE
A – Not Applicable

MARKING INFORMATION

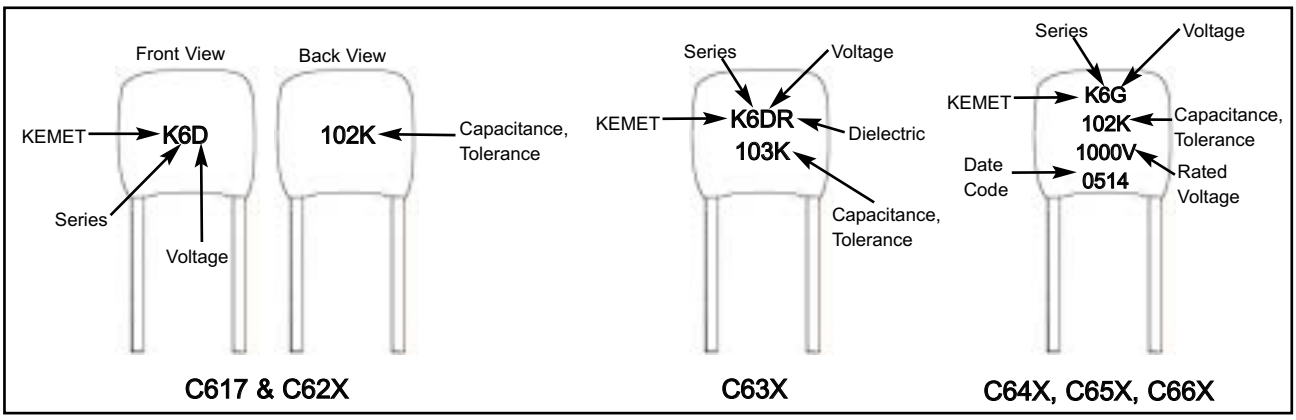

For packaging information, see pages 40, and 41.

© KEMET Electronics Corporation, P.O. Box 5928, Greenville, S.C. 29606, (864) 963-6300

RATINGS & PART NUMBER REFERENCE - COG/NPO

Goldmax HV C6XX Series Special Lead Spacing per M49467 - C0G

Cap	Cap Code	Cap Tol	C617					C62X (X=2, 3)					C62X (X=7, 8)					C63X (X=0,1)						C63X (X=7, 8)					
			WVDC					WVDC					WVDC					WVDC						WVDC					
			500	1k	1.5k	2k	3k	500	1k	1.5k	2k	3k	500	1k	1.5k	2k	3k	500	1k	1.5k	2k	2.5k	3k	500	1k	1.5k	2k	2.5k	3k
1.0pF	109	J,K,M																											
1.5	159	J,K,M																											
2.2	229	J,K,M																											
2.7	279	J,K,M																											
3.3	339	J,K,M																											
3.9	399	J,K,M																											
4.7	479	J,K,M																											
5.6	569	J,K,M																											
6.8	689	J,K,M																											
8.2	829	J,K,M																											
10	100	J,K,M																											
12	120	J,K,M																											
15	150	J,K,M																											
18	180	J,K,M																											
22	220	J,K,M																											
27	270	J,K,M																											
33	330	J,K,M																											
39	390	J,K,M																											
47	470	J,K,M																											
56	560	J,K,M																											
68	680	J,K,M																											
82	820	J,K,M																											
100	101	J,K,M																											
120	121	J,K,M																											
150	151	J,K,M																											
180	181	J,K,M																											
220	221	J,K,M																											
270	271	J,K,M																											
330	331	J,K,M																											
390	391	J,K,M																											
470	471	J,K,M																											
560	561	J,K,M																											
680	681	J,K,M																											
820	821	J,K,M																											
1000	102	J,K,M																											
1200	122	J,K,M																											
1500	152	J,K,M																											
1800	182	J,K,M																											
2200	222	J,K,M																											
2700	272	J,K,M																											
3300	332	J,K,M																											
3900	392	J,K,M																											
4700	472	J,K,M																											
5600	562	J,K,M																											
6800	682	J,K,M																											
8200	822	J,K,M																											
.010uF	103	J,K,M																											
.012	123	J,K,M																											
.015	153	J,K,M																											
.018	183	J,K,M																											
.022	223	J,K,M																											
.027	273	J,K,M																											
.033	333	J,K,M																											
.039	393	J,K,M																											
.047	473	J,K,M																											
.056	563	J,K,M																											
.068	683	J,K,M																											
.082	823	J,K,M																											
.10	104	J,K,M																											

For packaging information, see pages 40 and 41.

© KEMET Electronics Corporation, P.O. Box 5928, Greenville, S.C. 29606, (864) 963-6300

RATINGS & PART NUMBER REFERENCE - COG/NPO

Goldmax HV C6XX Series Special Lead Spacing per M49467 - C0G cont.

Cap	Cap Code	Cap Tol	C64X (X=0,1) WVDC 500	1k	2k	3k	C64X (X=2, 3) WVDC 500	1k	2k	3k	C64X (X=7, 8) WVDC 500	1k	2k	3k	C65X (X=7, 8) WVDC 500	1k	2k	3k	C66X (X=7, 8) WVDC 500	1k	2k	3k
1.0pF	109	J,K,M																				
1.5	159	J,K,M																				
2.2	229	J,K,M																				
2.7	279	J,K,M																				
3.3	339	J,K,M																				
3.9	399	J,K,M																				
4.7	479	J,K,M																				
5.6	569	J,K,M																				
6.8	689	J,K,M																				
8.2	829	J,K,M																				
10	100	J,K,M																				
12	120	J,K,M																				
15	150	J,K,M																				
18	180	J,K,M																				
22	220	J,K,M																				
27	270	J,K,M																				
33	330	J,K,M																				
39	390	J,K,M																				
47	470	J,K,M																				
56	560	J,K,M																				
68	680	J,K,M																				
82	820	J,K,M																				
100	101	J,K,M																				
120	121	J,K,M																				
150	151	J,K,M																				
180	181	J,K,M																				
220	221	J,K,M																				
270	271	J,K,M																				
330	331	J,K,M																				
390	391	J,K,M																				
470	471	J,K,M																				
560	561	J,K,M																				
680	681	J,K,M																				
820	821	J,K,M																				
1000	102	J,K,M																				
1200	122	J,K,M																				
1500	152	J,K,M																				
1800	182	J,K,M																				
2200	222	J,K,M																				
2700	272	J,K,M																				
3300	332	J,K,M																				
3900	392	J,K,M																				
4700	472	J,K,M																				
5600	562	J,K,M																				
6800	682	J,K,M																				
8200	822	J,K,M																				
.010uF	103	J,K,M																				
.012	123	J,K,M																				
.015	153	J,K,M																				
.018	183	J,K,M																				
.022	223	J,K,M																				
.027	273	J,K,M																				
.033	333	J,K,M																				
.039	393	J,K,M																				
.047	473	J,K,M																				
.056	563	J,K,M																				
.068	683	J,K,M																				
.082	823	J,K,M																				
.10	104	J,K,M																				

For packaging information, see pages 40 and 41.

RATINGS & PART NUMBER REFERENCE - X7R

Goldmax HV C6XX Series Special Lead Spacing per M49467 - X7R

Cap	Cap Code	Cap Tol	C617				C62X (X=2, 3)					C62X (X=7, 8)					C63X (X=0,1)						C63X (X=7, 8)					
		Style																										
			WVDC				WVDC					WVDC					WVDC						WVDC					
			500	1k	1.5k	2k	500	1k	1.5k	2k	3k	500	1k	1.5k	2k	3k	500	1k	1.5k	2k	2.5k	3k	500	1k	1.5k	2k	2.5k	3k
10pF	100	K,M,P,Z	■	■	■	■	■	■	■	■		■	■	■	■		■	■	■	■	■	■	■	■	■	■	■	■
12	120	K,M,P,Z	■	■	■	■	■	■	■	■		■	■	■	■		■	■	■	■	■	■	■	■	■	■	■	■
15	150	K,M,P,Z	■	■	■	■	■	■	■	■		■	■	■	■		■	■	■	■	■	■	■	■	■	■	■	■
18	180	K,M,P,Z	■	■	■	■	■	■	■	■		■	■	■	■		■	■	■	■	■	■	■	■	■	■	■	■
22	220	K,M,P,Z	■	■	■	■	■	■	■	■		■	■	■	■		■	■	■	■	■	■	■	■	■	■	■	■
27	270	K,M,P,Z	■	■	■	■	■	■	■	■		■	■	■	■		■	■	■	■	■	■	■	■	■	■	■	■
33	330	K,M,P,Z	■	■	■	■	■	■	■	■		■	■	■	■		■	■	■	■	■	■	■	■	■	■	■	■
39	390	K,M,P,Z	■	■	■	■	■	■	■	■		■	■	■	■		■	■	■	■	■	■	■	■	■	■	■	■
47	470	K,M,P,Z	■	■	■	■	■	■	■	■		■	■	■	■		■	■	■	■	■	■	■	■	■	■	■	■
56	560	K,M,P,Z	■	■	■	■	■	■	■	■	■	■	■	■	■		■	■	■	■	■	■	■	■	■	■	■	■
68	680	K,M,P,Z	■	■	■	■	■	■	■	■	■	■	■	■	■		■	■	■	■	■	■	■	■	■	■	■	■
82	820	K,M,P,Z	■	■	■	■	■	■	■	■	■	■	■	■	■		■	■	■	■	■	■	■	■	■	■	■	■
100	101	K,M,P,Z	■	■	■	■	■	■	■	■	■	■	■	■	■		■	■	■	■	■	■	■	■	■	■	■	■
120	121	K,M,P,Z	■	■	■	■	■	■	■	■	■	■	■	■	■		■	■	■	■	■	■	■	■	■	■	■	■
150	151	K,M,P,Z	■	■	■	■	■	■	■	■	■	■	■	■	■		■	■	■	■	■	■	■	■	■	■	■	■
180	181	K,M,P,Z	■	■	■	■	■	■	■	■	■	■	■	■	■		■	■	■	■	■	■	■	■	■	■	■	■
220	221	K,M,P,Z	■	■	■	■	■	■	■	■	■	■	■	■	■		■	■	■	■	■	■	■	■	■	■	■	■
270	271	K,M,P,Z	■	■	■	■	■	■	■	■	■	■	■	■	■		■	■	■	■	■	■	■	■	■	■	■	■
330	331	K,M,P,Z	■	■	■	■	■	■	■	■	■	■	■	■	■		■	■	■	■	■	■	■	■	■	■	■	■
390	391	K,M,P,Z	■	■	■	■	■	■	■	■	■	■	■	■	■		■	■	■	■	■	■	■	■	■	■	■	■
470	471	K,M,P,Z	■	■	■	■	■	■	■	■	■	■	■	■	■		■	■	■	■	■	■	■	■	■	■	■	■
560	561	K,M,P,Z	■	■	■	■	■	■	■	■	■	■	■	■	■		■	■	■	■	■	■	■	■	■	■	■	■
680	681	K,M,P,Z	■	■	■	■	■	■	■	■	■	■	■	■	■	■	■	■	■	■	■	■	■	■	■	■	■	■
820	821	K,M,P,Z	■	■	■	■	■	■	■	■	■	■	■	■	■	■	■	■	■	■	■	■	■	■	■	■	■	■
1000	102	K,M,P,Z	■	■	■	■	■	■	■	■	■	■	■	■	■	■	■	■	■	■	■	■	■	■	■	■	■	■
1200	122	K,M,P,Z	■	■	■	■	■	■	■	■	■	■	■	■	■	■	■	■	■	■	■	■	■	■	■	■	■	■
1500	152	K,M,P,Z	■	■	■	■	■	■	■	■	■	■	■	■	■	■	■	■	■	■	■	■	■	■	■	■	■	■
1800	182	K,M,P,Z	■	■	■	■	■	■	■	■	■	■	■	■	■	■	■	■	■	■	■	■	■	■	■	■	■	■
2200	222	K,M,P,Z	■	■	■	■	■	■	■	■	■	■	■	■	■	■	■	■	■	■	■	■	■	■	■	■	■	■
2700	272	K,M,P,Z	■	■	■	■	■	■	■	■	■	■	■	■	■	■	■	■	■	■			■	■	■	■	■	■
3300	332	K,M,P,Z	■	■	■	■	■	■	■	■	■	■	■	■	■	■	■	■	■	■			■	■	■	■	■	■
3900	392	K,M,P,Z	■	■	■	■	■	■	■	■	■	■	■	■	■	■	■	■	■	■			■	■	■	■	■	■
4700	472	K,M,P,Z	■	■			■	■	■	■		■	■	■	■	■	■	■	■	■			■	■	■	■	■	■
5600	562	K,M,P,Z	■	■			■	■	■	■		■	■	■	■	■	■	■	■	■			■	■	■	■	■	■
6800	682	K,M,P,Z	■	■			■	■	■	■		■	■	■	■		■	■	■	■			■	■	■	■	■	■
8200	822	K,M,P,Z	■	■			■	■	■	■		■	■	■	■		■	■	■	■			■	■	■	■	■	■
.010uF	103	K,M,P,Z	■	■			■	■	■	■		■	■	■	■		■	■					■	■	■	■	■	■
.012	123	K,M,P,Z	■	■			■	■	■	■		■	■	■	■		■	■					■	■	■	■	■	■
.015	153	K,M,P,Z	■	■			■	■				■	■	■	■		■	■					■	■	■	■	■	■
.018	183	K,M,P,Z	■	■			■	■				■	■	■	■		■	■					■	■	■	■		
.022	223	K,M,P,Z	■	■			■	■				■	■				■	■					■	■	■	■		
.027	273	K,M,P,Z	■				■	■				■	■				■	■					■	■	■	■		
.033	333	K,M,P,Z	■				■	■				■	■				■	■					■	■	■	■		
.039	393	K,M,P,Z	■				■	■				■	■				■	■					■	■				
.047	473	K,M,P,Z	■				■	■				■	■				■	■					■	■				
.056	563	K,M,P,Z	■				■	■				■	■				■	■					■	■				
.068	683	K,M,P,Z	■				■	■				■	■				■						■	■				
.082	823	K,M,P,Z	■				■					■	■				■						■	■				
.10	104	K,M,P,Z					■					■					■						■	■				
.12	124	K,M,P,Z					■					■					■						■	■				
.15	154	K,M,P,Z					■					■					■						■	■				
.18	184	K,M,P,Z					■					■					■						■	■				
.22	224	K,M,P,Z										■					■						■	■				
.27	274	K,M,P,Z																					■	■				
.33	334	K,M,P,Z																					■					
.39	394	K,M,P,Z																					■					
.47	474	K,M,P,Z																					■					
.56	564	K,M,P,Z																					■					
.68	684	K,M,P,Z																										
.82	824	K,M,P,Z																										
1.0	105	K,M,P,Z																										
1.2	125	K,M,P,Z																										
1.5	155	K,M,P,Z																										
1.8	185	K,M,P,Z																										
2.2	225	K,M,P,Z																										
2.7	275	K,M,P,Z																										

For packaging information, see pages 40 and 41.

© KEMET Electronics Corporation, P.O. Box 5928, Greenville, S.C. 29606, (864) 963-6300

RATINGS & PART NUMBER REFERENCE - X7R

Goldmax HV C6XX Series Special Lead Spacing per M49467 - X7R cont.

Cap	Cap Code	Cap Tol	C64X (X=0,1) WVDC 500	1k	2k	3k	C64X (X=2, 3) WVDC 500	1k	2k	3k	C64X (X=7, 8) WVDC 500	1k	2k	3k	C65X (X=7, 8) WVDC 500	1k	2k	3k	C66X (X=7, 8) WVDC 500	1k	2k	3k
10pF	100	K,M,P,Z																				
12	120	K,M,P,Z																				
15	150	K,M,P,Z																				
18	180	K,M,P,Z																				
22	220	K,M,P,Z																				
17	270	K,M,P,Z																				
33	330	K,M,P,Z																				
39	390	K,M,P,Z																				
47	470	K,M,P,Z																				
56	560	K,M,P,Z																				
68	680	K,M,P,Z																				
82	820	K,M,P,Z																				
100	101	K,M,P,Z																				
120	121	K,M,P,Z																				
150	151	K,M,P,Z																				
180	181	K,M,P,Z																				
220	221	K,M,P,Z																				
270	271	K,M,P,Z																				
330	331	K,M,P,Z																				
390	391	K,M,P,Z																				
470	471	K,M,P,Z																				
560	561	K,M,P,Z																				
680	681	K,M,P,Z																				
820	821	K,M,P,Z																				
1000	102	K,M,P,Z																				
1200	122	K,M,P,Z																				
1500	152	K,M,P,Z																				
1800	182	K,M,P,Z																				
2200	222	K,M,P,Z																				
2700	272	K,M,P,Z																				
3300	332	K,M,P,Z																				
3900	392	K,M,P,Z																				
4700	472	K,M,P,Z																				
5600	562	K,M,P,Z																				
6800	682	K,M,P,Z																				
8200	822	K,M,P,Z																				
.010uF	103	K,M,P,Z																				
.012	123	K,M,P,Z																				
.015	153	K,M,P,Z																				
.018	183	K,M,P,Z																				
.022	223	K,M,P,Z																				
.027	273	K,M,P,Z																				
.033	333	K,M,P,Z																				
.039	393	K,M,P,Z																				
.047	473	K,M,P,Z																				
.056	563	K,M,P,Z																				
.068	683	K,M,P,Z																				
.082	823	K,M,P,Z																				
.10	104	K,M,P,Z																				
.12	124	K,M,P,Z																				
.15	154	K,M,P,Z																				
.18	184	K,M,P,Z																				
.22	224	K,M,P,Z																				
.27	274	K,M,P,Z																				
.33	334	K,M,P,Z																				
.39	394	K,M,P,Z																				
.47	474	K,M,P,Z																				
.56	564	K,M,P,Z																				
.68	684	K,M,P,Z																				
.82	824	K,M,P,Z																				
1.0	105	K,M,P,Z																				
1.2	125	K,M,P,Z																				
1.5	155	K,M,P,Z																				
1.8	185	K,M,P,Z																				
2.2	225	K,M,P,Z																				
2.7	275	K,M,P,Z																				

For packaging information, see pages 40 and 41.

GENERAL

Working Voltage:
C0G – 50, 100 & 200 Volts
X7R – 50, 100 & 200 Volts

Temperature Characteristics:
C0G – 0 ±30 PPM/°C from -55°C to +125°C
X7R – ±15% from -55°C to +125°C

Capacitance Tolerance:
C0G – ±0.5 pF, ±1%, ±2%, ±5%, ±10%, ±20%
(±0.5 pF is tightest available tolerance)
X7R – ±10%, ±20%, -0 +100%, -20% +80%

Construction:
Monolithic block of ceramic dielectric with interdigitated internal electrodes, encapsulated in a molded case, and having axial or radial leads. Meets flame test requirements of UL Standard 94V-0.

Terminal Strength:
EIA-198 Method 303 Condition A (2.2 kg)

ELECTRICAL

Capacitance:
Within specified tolerance when measured with 1 volt rms at 1 kHz (1000 pF or less at 1 MHz for C0G).

Dissipation Factor:
25°C at 1 kHz (1000 pF or less at 1 MHz for C0G).
C0G – .15% maximum
X7R – 2.5% maximum

Insulation Resistance:
After 2 minutes electrification at 25°C and rated voltage
C0G – 100K megohms or 1000 megohm - µF, whichever is less.
X7R – 100K megohms or 1000 megohm - µF, whichever is less.

Dielectric Withstanding Voltage:
250% of rated voltage for 5 seconds with current limited to 50 mA at 25°C.

Life Test:
2000 hours at 200% of rated voltage at 125°C. Post-Test limits at 25°C are:

Capacitance Change:
C0G – less than 3% or 0.25 pF, whichever is higher
X7R – ±20% of initial value

Dissipation Factor:
C0G – .25% maximum
X7R – 3.0% maximum

Insulation Resistance:
C0G – 10K megohms or 100 megohm - µF, whichever is less
X7R – 10K megohms or 100 megohm - µF, whichever is less

Dielectric Withstanding Voltage:
250% of rated voltage for 5 seconds with current limited to 50 mA.

ENVIRONMENTAL

Moisture Resistance:
MIL-STD-202, Method 106, or EIA-198, Method 204, Condition A, except 20 cycles.

Insulation Resistance:
C0G – 10K megohms or 100 megohm - µF, whichever is less
X7R – 10K megohms or 100 megohm - µF, whichever is less

Dielectric Withstanding Voltage:
250% of rated voltage for 5 seconds with current limited to 50 mA.

Immersion Cycling:
MIL-STD-202, Method 104, Condition B. Post-Test limits at 25°C are:

Insulation Resistance:
C0G – 10K megohms or 100 megohm - µF, whichever is less
X7R – 10K megohms or 100 megohm - µF, whichever is less

Solderability:
MIL-STD-202, Method 208, Sn62 solder, 245°C for 5 ±1/2 seconds.

Resistance to Soldering Heat:
MIL-STD-202, Method 210, Condition B (260°C, 10 secs). Depth of immersion — to a minimum of .050" from the capacitor body.

Lead Material:
Axial: Solder-coated copper clad steel
Radial: Solder-coated copper standard; 100% tin plated optional

© KEMET Electronics Corporation, P.O. Box 5928, Greenville, S.C. 29606, (864) 963-6300

CAPACITOR OUTLINE DRAWINGS — (AXIAL LEADS)

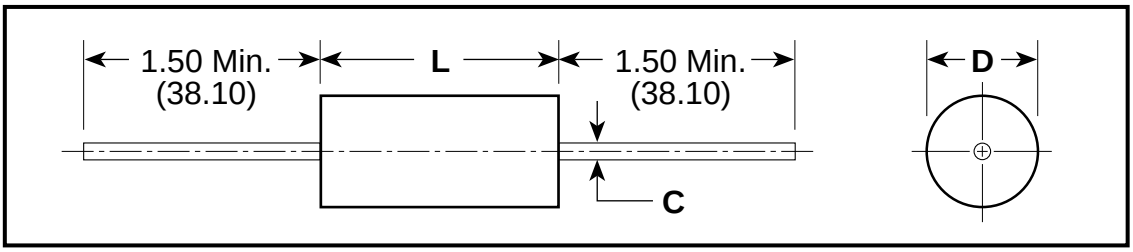

DIMENSIONS—INCHES & (MILLIMETERS)

CASE SIZE	MILITARY EQUIVALENT STYLES	L	D	C
C114	CC75, CCR75 CK12, CKR11	.160 ± .010 (4.06 ± .25)	.090 ± .010 (2.29 ± .25)	.020, +.000, -.003 (.51, +.00, -.08)
C124	CC76, CCR76 CK13, CKR12	.250 ± .010 (6.35 ± .25)	.090 ± .010 (2.29 ± .25)	.020, +.000, -.003 (.51, +.00, -.08)
C192	CC77, CCR77 CK14, CKR14	.390 ± .010 (9.91 ± .25)	.140 ± .010 (3.56 ± .25)	.025, +.004, -.001 (.64, +.10, -.025)
C202	CC78, CCR78 CK15, CKR15	.500 ± .020 (12.70 ± .51)	.250 ± .015 (6.35 ± .38)	.025, +.004, -.001 (.64, +.10, -.025)
C222	CC79, CCR79 CK16, CKR16	.690 ± .030 (17.53 ± .76)	.350 ± .020 (8.89 ± .51)	.025, +.004, -.001 (.64, +.10, -.025)

CAPACITOR OUTLINE DRAWINGS — (RADIAL LEADS)

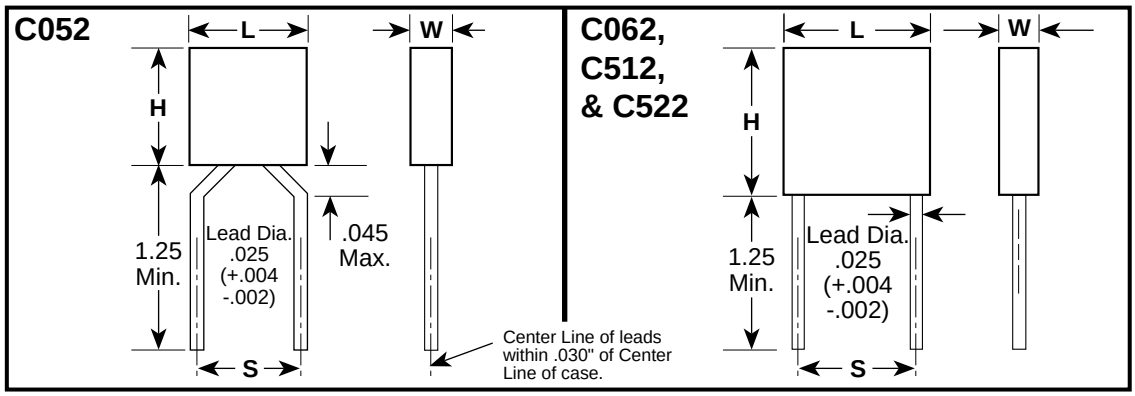

DIMENSIONS—INCHES & (MILLIMETERS)

CASE SIZE	MILITARY EQUIVALENT STYLES	H HEIGHT	L LENGTH	W WIDTH	S LEAD SPACING
C052	CC05, CCR05 CK05, CKR05	.190 ± .010 (4.83 ± .25)	.190 ± .010 (4.83 ± .25)	.090 ± .010 (2.29 ± .25)	.200 ± .015 (5.08 ± .38)
C062	CC06, CCR06 CK06, CKR06	.290 ± .010 (7.37 ± .25)	.290 ± .010 (7.37 ± .25)	.090 ± .010 (2.29 ± .25)	.200 ± .015 (5.08 ± .38)
C512	CC07, CCR07	.480 ± .020 (12.19 ± .51)	.480 ± .020 (12.19 ± .51)	.140 ± .010 (3.56 ± .25)	.400 ± .020 (10.16 ± .51)
C522	CC08, CCR08	.480 ± .020 (12.19 ± .51)	.480 ± .020 (12.19 ± .51)	.240 ± .010 (6.10 ± .25)	.400 ± .020 (10.16 ± .51)

For packaging information, see pages 39, 40 and 41.

ORDERING INFORMATION

C 052 C 102 K 2 R 5 C A**

CERAMIC

***CASE SIZE**
(See Table Below)

SPECIFICATION
Standard
C — Standard

CAPACITANCE
In picofarad code: First two digits are significant figures and third is number of zeroes following (except 9 indicates division by 10). Examples: 0.1 µF = 100,000 pF = 104 and 9.1 pF = 919. See tables for Standard Values.

CAPACITANCE TOLERANCE

Standard
M — ±20%
K — ±10%
J — ±5%

Others
H — ±3%
G — ±2%
F — ±1%
D — ±.5 pF

WORKING VOLTAGE
1 — 100
2 — 200
5 — 50

TEMPERATURE CHARACTERISTIC

FAILURE RATE
A — Not Applicable (Std.)

LEAD MATERIAL
C — Standard
T — 100% Tin plated
(C052, C062 only)

INTERNAL CONSTRUCTION
5 — Standard

KEMET Designator	EIA Equivalent	Cap. Change With Temp. Temp. Range, °C	Cap. Change With Temp. Measured Without DC Bias Voltage
G (Ultra Stable)	C0G (NPO)	-55 to +125	±30 ppm/°C
R (Stable)	X7R	-55 to +125	±15%

Standard tolerances for each Series are shown in the repetitive parts lists.

*CASE SIZES	
RADIAL	AXIAL
C052	C114
C062	C124
C512	C192
C522	C202
	C222

****Part Number Example: C052C102K2R5CA (14 digits – no spaces)**

AXIAL CAPACITOR MARKING

STANDARD C114C, C124C, C192C, C202C & C222C

KC0G	KEMET, Temperature Characteristic
101J	Capacitance, Capacitance Tolerance
200V	Voltage
0512	Date Code

RADIAL CAPACITOR MARKING

C052C & C062C STANDARD MARKING

FRONT

Style	C062
Temperature Characteristic	X7R
Capacitance, Capacitance Tolerance	104K

BACK

100V	Voltage
K	KEMET
0511	Date Code

C512 & C522 STANDARD MARKING

KEMET	KEMET
C512X7R	SIZE and Temperature Characteristic
105K 50V	Capacitance, Capacitance Tolerance, Voltage
0532	Date Code

© KEMET Electronics Corporation, P.O. Box 5928, Greenville, S.C. 29606, (864) 963-6300

RATINGS & PART NUMBER REFERENCE

CAPACITANCE pF	KEMET PART NUMBER
200 VOLT — C114 STANDARD C0G	
1.0	C114C109(1)2G5CA
1.5	C114C159(1)2G5CA
2.2	C114C229(1)2G5CA
2.7	C114C279(1)2G5CA
3.3	C114C339(1)2G5CA
3.9	C114C399(1)2G5CA
4.7	C114C479(1)2G5CA
5.6	C114C569(1)2G5CA
6.8	C114C689(1)2G5CA
8.2	C114C829(1)2G5CA
10.0	C114C100(2)2G5CA
12.0	C114C120(2)2G5CA
15.0	C114C150(2)2G5CA
18.0	C114C180(2)2G5CA
22.0	C114C220(2)2G5CA
27.0	C114C270(3)2G5CA
33.0	C114C330(3)2G5CA
39.0	C114C390(3)2G5CA
47.0	C114C470(3)2G5CA
56.0	C114C560(4)2G5CA
68.0	C114C680(4)2G5CA
82.0	C114C820(4)2G5CA
100.0	C114C101(4)2G5CA
120.0	C114C121(4)2G5CA
150.0	C114C151(4)2G5CA
180.0	C114C181(4)2G5CA
220.0	C114C221(4)2G5CA
270.0	C114C271(4)2G5CA
330.0	C114C331(4)2G5CA
100 VOLT — C114 STANDARD C0G	
82.0	C114C820(4)1G5CA
100.0	C114C101(4)1G5CA
120.0	C114C121(4)1G5CA
150.0	C114C151(4)1G5CA
180.0	C114C181(4)1G5CA
220.0	C114C221(4)1G5CA
270.0	C114C271(4)1G5CA
330.0	C114C331(4)1G5CA
390.0	C114C391(4)1G5CA
470.0	C114C471(4)1G5CA
560.0	C114C561(4)1G5CA
680.0	C114C681(4)1G5CA

NOTE 1: Insert proper symbol for capacitance tolerance as follows:

(1) 1.0 pF to 8.2 pF: D— ±.5 pF
(2) 10.0 pF to 22 pF: J— ±5%, K— ±10%
(3) 27.0 pF to 47 pF: G— ±2%, J— ±5%, K— ±10%
(4) 56.0 pF and up: F— ±1%,G— ±2%, J— ±5%, K— ±10%

CAPACITANCE pF	KEMET PART NUMBER
200 VOLT — C124 STANDARD C0G	
390.0	C124C391(4)2G5CA
470.0	C124C471(4)2G5CA
560.0	C124C561(4)2G5CA
100 VOLT — C124 STANDARD C0G	
820.0	C124C821(4)1G5CA
1,000.0	C124C102(4)1G5CA
200 VOLT — C192 STANDARD C0G	
680.0	C192C681(4)2G5CA
820.0	C192C821(4)2G5CA
1,000.0	C192C102(4)2G5CA
1,200.0	C192C122(4)2G5CA
1,500.0	C192C152(4)2G5CA
1,800.0	C192C182(4)2G5CA
2,200.0	C192C222(4)2G5CA
2,700.0	C192C272(4)2G5CA
3,300.0	C192C332(4)2G5CA
3,900.0	C192C392(4)2G5CA
4,700.0	C192C472(4)2G5CA
100 VOLT — C192 STANDARD C0G	
1,200.0	C192C122(4)1G5CA
1,500.0	C192C152(4)1G5CA
1,800.0	C192C182(4)1G5CA
2,200.0	C192C222(4)1G5CA
2,700.0	C192C272(4)1G5CA
3,300.0	C192C332(4)1G5CA
3,900.0	C192C392(4)1G5CA
4,700.0	C192C472(4)1G5CA
5,600.0	C192C562(4)1G5CA
6,800.0	C192C682(4)1G5CA
8,200.0	C192C822(4)1G5CA

NOTE 1: Insert proper symbol for capacitance tolerance as follows:

(1) 1.0 pF to 8.2 pF: D— ±.5 pF
(2) 10.0 pF to 22 pF: J— ±5%, K— ±10%
(3) 27.0 pF to 47 pF: G— ±2%, J— ±5%, K— ±10%
(4) 56.0 pF and up: F— ±1%,G— ±2%, J— ±5%, K— ±10%

CAPACITANCE pF	KEMET PART NUMBER
200 VOLT — C202 STANDARD C0G	
5,600.0	C202C562(4)2G5CA
6,800.0	C202C682(4)2G5CA
8,200.0	C202C822(4)2G5CA
10,000.0	C202C103(4)2G5CA
12,000.0	C202C123(4)2G5CA
15,000.0	C202C153(4)2G5CA
18,000.0	C202C183(4)2G5CA
22,000.0	C202C223(4)2G5CA
100 VOLT — C202 STANDARD C0G	
10,000.0	C202C103(4)1G5CA
12,000.0	C202C123(4)1G5CA
15,000.0	C202C153(4)1G5CA
18,000.0	C202C183(4)1G5CA
22,000.0	C202C223(4)1G5CA
27,000.0	C202C273(4)1G5CA
33,000.0	C202C333(4)1G5CA
200 VOLT — C222 STANDARD C0G	
27,000.0	C222C273(4)2G5CA
33,000.0	C222C333(4)2G5CA
39,000.0	C222C393(4)2G5CA
47,000.0	C222C473(4)2G5CA
100 VOLT — C222 STANDARD C0G	
39,000.0	C222C393(4)1G5CA
47,000.0	C222C473(4)1G5CA
56,000.0	C222C563(4)1G5CA
68,000.0	C222C683(4)1G5CA
82,000.0	C222C823(4)1G5CA
100,000.0	C222C104(4)1G5CA

NOTE 1: Insert proper symbol for capacitance tolerance as follows:

(1) 1.0 pF to 8.2 pF: D— ±.5 pF
(2) 10.0 pF to 22 pF: J— ±5%, K— ±10%
(3) 27.0 pF to 47 pF: G— ±2%, J— ±5%, K— ±10%
(4) 56.0 pF and up: F— ±1%,G— ±2%, J— ±5%, K— ±10%

RATINGS & PART NUMBER REFERENCE

CAPACITANCE pF	KEMET PART NUMBER
200 VOLT — C052 SIZE C0G	
1.0	C052C109(1)2G5CA
1.5	C052C159(1)2G5CA
2.2	C052C229(1)2G5CA
2.7	C052C279(1)2G5CA
3.3	C052C339(1)2G5CA
3.9	C052C399(1)2G5CA
4.7	C052C479(1)2G5CA
5.6	C052C569(1)2G5CA
6.8	C052C689(1)2G5CA
8.2	C052C829(1)2G5CA
10.0	C052C100(2)2G5CA
12.0	C052C120(2)2G5CA
15.0	C052C150(2)2G5CA
18.0	C052C180(2)2G5CA
22.0	C052C220(2)2G5CA
27.0	C052C270(3)2G5CA
33.0	C052C330(3)2G5CA
39.0	C052C390(3)2G5CA
47.0	C052C470(3)2G5CA
56.0	C052C560(4)2G5CA
68.0	C052C680(4)2G5CA
82.0	C052C820(4)2G5CA
100.0	C052C101(4)2G5CA
120.0	C052C121(4)2G5CA
150.0	C052C151(4)2G5CA
180.0	C052C181(4)2G5CA
220.0	C052C221(4)2G5CA
270.0	C052C271(4)2G5CA
330.0	C052C331(4)2G5CA
390.0	C052C391(4)2G5CA
470.0	C052C471(4)2G5CA
560.0	C052C561(4)2G5CA
680.0	C052C681(4)2G5CA
820.0	C052C821(4)2G5CA
1,000.0	C052C102(4)2G5CA
1,200.0	C052C122(4)2G5CA
1,500.0	C052C152(4)2G5CA
1,800.0	C052C182(4)2G5CA
2,200.0	C052C222(4)2G5CA
2,700.0	C052C272(4)2G5CA
100 VOLT — C052 SIZE C0G	
390.0	C052C391(4)1G5CA
470.0	C052C471(4)1G5CA
560.0	C052C561(4)1G5CA
680.0	C052C681(4)1G5CA
820.0	C052C821(4)1G5CA
1,000.0	C052C102(4)1G5CA
1,200.0	C052C122(4)1G5CA
1,500.0	C052C152(4)1G5CA
1,800.0	C052C182(4)1G5CA
2,200.0	C052C222(4)1G5CA
2,700.0	C052C272(4)1G5CA
3,300.0	C052C332(4)1G5CA
3,900.0	C052C392(4)1G5CA
4,700.0	C052C472(4)1G5CA

NOTE 1: Insert proper symbol for capacitance tolerance as follows:

(1) 1.0 pF to 8.2 pF: D— ±.5 pF
(2) 10.0 pF to 22 pF: J— ±5%, K— ±10%
(3) 27.0 pF to 47 pF: G— ±2%, J— ±5%, K— ±10%
(4) 56.0 pF and up: F— ±1%,G— ±2%, J— ±5%, K— ±10%

CAPACITANCE pF	KEMET PART NUMBER
200 VOLT — C062 SIZE C0G	
3,300.0	C062C332(4)2G5CA
3,900.0	C062C392(4)2G5CA
4,700.0	C062C472(4)2G5CA
5,600.0	C062C562(4)2G5CA
6,800.0	C062C682(4)2G5CA
8,200.0	C062C822(4)2G5CA
10,000.0	C062C103(4)2G5CA
100 VOLT — C062 SIZE C0G	
5,600.0	C062C562(4)1G5CA
6,800.0	C062C682(4)1G5CA
8,200.0	C062C822(4)1G5CA
10,000.0	C062C103(4)1G5CA
12,000.0	C062C123(4)1G5CA
15,000.0	C062C153(4)1G5CA
18,000.0	C062C183(4)1G5CA
22,000.0	C062C223(4)1G5CA
200 VOLT — C512 SIZE C0G	
12,000.0	C512C123(4)2G5CA
15,000.0	C512C153(4)2G5CA
18,000.0	C512C183(4)2G5CA
22,000.0	C512C223(4)2G5CA
27,000.0	C512C273(4)2G5CA
33,000.0	C512C333(4)2G5CA
39,000.0	C512C393(4)2G5CA
47,000.0	C512C473(4)2G5CA
56,000.0	C512C563(4)2G5CA
68,000.0	C512C683(4)2G5CA
100 VOLT — C512 SIZE C0G	
27,000.0	C512C273(4)1G5CA
33,000.0	C512C333(4)1G5CA
39,000.0	C512C393(4)1G5CA
47,000.0	C512C473(4)1G5CA
56,000.0	C512C563(4)1G5CA
68,000.0	C512C683(4)1G5CA
82,000.0	C512C823(4)1G5CA
100,000.0	C512C104(4)1G5CA
200 VOLT — C522 SIZE C0G	
82,000.0	C522C823(4)2G5CA
100,000.0	C522C104(4)2G5CA
100 VOLT — C522 SIZE C0G	
120,000.0	C522C124(4)1G5CA
150,000.0	C522C154(4)1G5CA
180,000.0	C522C184(4)1G5CA

NOTE 1: Insert proper symbol for capacitance tolerance as follows:

(1) 1.0 pF to 8.2 pF: D— ±.5 pF
(2) 10.0 pF to 22 pF: J— ±5%, K— ±10%
(3) 27.0 pF to 47 pF: G— ±2%, J— ±5%, K— ±10%
(4) 56.0 pF and up: F— ±1%,G— ±2%, J— ±5%, K— ±10%

© KEMET Electronics Corporation, P.O. Box 5928, Greenville, S.C. 29606, (864) 963-6300

RATINGS & PART NUMBER REFERENCE

CAPACI–TANCE pF	TOL. %	KEMET PART NUMBER
100 VOLT — C114 SIZE		
10	10	C114C100K1R5CA
10	20	C114C100M1R5CA
12	10	C114C120K1R5CA
15	10	C114C150K1R5CA
15	20	C114C150M1R5CA
18	10	C114C180K1R5CA
22	20	C114C220K1R5CA
22	10	C114C220M1R5CA
27	10	C114C270K1R5CA
33	10	C114C330K1R5CA
33	20	C114C330M1R5CA
39	10	C114C390K1R5CA
47	10	C114C470K1R5CA
47	20	C114C470M1R5CA
56	10	C114C560K1R5CA
68	10	C114C680K1R5CA
68	20	C114C680M1R5CA
82	10	C114C820K1R5CA
100	10	C114C101K1R5CA
100	20	C114C101M1R5CA
120	10	C114C121K1R5CA
150	10	C114C151K1R5CA
150	20	C114C151M1R5CA
180	10	C114C181K1R5CA
220	10	C114C221K1R5CA
220	20	C114C221M1R5CA
270	10	C114C271K1R5CA
330	10	C114C331K1R5CA
330	20	C114C331M1R5CA
390	10	C114C391K1R5CA
470	10	C114C471K1R5CA
470	20	C114C471M1R5CA
560	10	C114C561K1R5CA
680	10	C114C681K1R5CA
680	20	C114C681M1R5CA
820	10	C114C821K1R5CA
1,000	10	C114C102K1R5CA
1,000	20	C114C102M1R5CA
1,200	10	C114C122K1R5CA
1,500	10	C114C152K1R5CA
1,500	20	C114C152M1R5CA
1,800	10	C114C182K1R5CA
2,200	10	C114C222K1R5CA
2,200	20	C114C222M1R5CA
2,700	10	C114C272K1R5CA
3,300	10	C114C332K1R5CA
3,300	20	C114C332M1R5CA
3,900	10	C114C392K1R5CA
4,700	10	C114C472K1R5CA
4,700	20	C114C472M1R5CA
50 VOLT — C114 SIZE		
5,600	10	C114C562K5R5CA
6,800	10	C114C682K5R5CA
6,800	20	C114C682M5R5CA
8,200	10	C114C822K5R5CA
10,000	10	C114C103K5R5CA
10,000	20	C114C103M5R5CA

CAPACI–TANCE pF	TOL. %	KEMET PART NUMBER
100 VOLT — C124 SIZE		
5,600	10	C124C562K1R5CA
6,800	10	C124C682K1R5CA
6,800	20	C124C682M1R5CA
8,200	10	C124C822K1R5CA
10,000	10	C124C103K1R5CA
10,000	20	C124C103M1R5CA
50 VOLT — C124 SIZE		
12,000	10	C124C123K5R5CA
15,000	10	C124C153K5R5CA
15,000	20	C124C153M5R5CA
18,000	10	C124C183K5R5CA
22,000	10	C124C223K5R5CA
22,000	20	C124C223M5R5CA
27,000	10	C124C273K5R5CA
33,000	10	C124C333K5R5CA
33,000	20	C124C333M5R5CA
39,000	10	C124C393K5R5CA
47,000	10	C124C473K5R5CA
47,000	20	C124C473M5R5CA
100 VOLT — C192 SIZE		
12,000	10	C192C123K1R5CA
15,000	10	C192C153K1R5CA
15,000	20	C192C153M1R5CA
18,000	10	C192C183K1R5CA
22,000	10	C192C223K1R5CA
22,000	20	C192C223M1R5CA
27,000	10	C192C273K1R5CA
33,000	10	C192C333K1R5CA
33,000	20	C192C333M1R5CA
39,000	10	C192C393K1R5CA
47,000	10	C192C473K1R5CA
47,000	20	C192C473M1R5CA
56,000	10	C192C563K1R5CA
68,000	10	C192C683K1R5CA
68,000	20	C192C683M1R5CA
82,000	10	C192C823K1R5CA
100,000	10	C192C104K1R5CA
100,000	20	C192C104M1R5CA
50 VOLT — C192 SIZE		
56,000	10	C192C563K5R5CA
68,000	10	C192C683K5R5CA
68,000	20	C192C683M5R5CA
82,000	10	C192C823K5R5CA
100,000	10	C192C104K5R5CA
100,000	20	C192C104M5R5CA
120,000	10	C192C124K5R5CA
150,000	10	C192C154K5R5CA
150,000	20	C192C154M5R5CA
180,000	10	C192C184K5R5CA
220,000	10	C192C224K5R5CA
220,000	20	C192C224M5R5CA
270,000	10	C192C274K5R5CA

CAPACI–TANCE pF	TOL. %	KEMET PART NUMBER
100 VOLT — C202 SIZE		
56,000	10	C202C563K1R5CA
68,000	10	C202C683K1R5CA
68,000	20	C202C683M1R5CA
82,000	10	C202C823K1R5CA
100,000	10	C202C104K1R5CA
100,000	20	C202C104M1R5CA
120,000	10	C202C124K1R5CA
150,000	10	C202C154K1R5CA
150,000	20	C202C154M1R5CA
180,000	10	C202C184K1R5CA
220,000	10	C202C224K1R5CA
220,000	20	C202C224M1R5CA
270,000	10	C202C274K1R5CA
330,000	10	C202C334K1R5CA
330,000	20	C202C334M1R5CA
50 VOLT — C202 SIZE		
470,000	10	C202C474K5R5CA
470,000	20	C202C474M5R5CA
680,000	10	C202C684K5R5CA
680,000	20	C202C684M5R5CA
1,000,000	10	C202C105K5R5CA
1,000,000	20	C202C105M5R5CA
100 VOLT — C222 SIZE		
470,000	10	C222C474K1R5CA
470,000	20	C222C474M1R5CA
680,000	10	C222C684K1R5CA
680,000	20	C222C684M1R5CA
1,000,000	10	C222C105K1R5CA
1,000,000	20	C222C105M1R5CA
50 VOLT — C222 SIZE		
2,200,000	10	C222C225K5R5CA
2,200,000	20	C222C225M5R5CA
3,300,000	10	C222C335K5R5CA
3,300,000	20	C222C335M5R5CA

RATINGS & PART NUMBER REFERENCE

CAPACI–TANCE pF	TOL. %	KEMET PART NUMBER
200 VOLT — C052 SIZE		
10	10	C052C100K2R5CA
10	20	C052C100M2R5CA
12	10	C052C120K2R5CA
15	10	C052C150K2R5CA
15	20	C052C150M2R5CA
18	10	C052C180K2R5CA
22	10	C052C220K2R5CA
22	20	C052C220M2R5CA
27	10	C052C270K2R5CA
33	10	C052C330K2R5CA
33	20	C052C330M2R5CA
39	10	C052C390K2R5CA
47	10	C052C470K2R5CA
47	20	C052C470M2R5CA
56	10	C052C560K2R5CA
68	10	C052C680K2R5CA
68	20	C052C680M2R5CA
82	10	C052C820K2R5CA
100	10	C052C101K2R5CA
100	20	C052C101M2R5CA
120	10	C052C121K2R5CA
150	10	C052C151K2R5CA
150	20	C052C151M2R5CA
180	10	C052C181K2R5CA
220	10	C052C221K2R5CA
220	20	C052C221M2R5CA
270	10	C052C271K2R5CA
330	10	C052C331K2R5CA
330	20	C052C331M2R5CA
390	10	C052C391K2R5CA
470	10	C052C471K2R5CA
470	20	C052C471M2R5CA
560	10	C052C561K2R5CA
680	10	C052C681K2R5CA
680	20	C052C681M2R5CA
820	10	C052C821K2R5CA
1,000	10	C052C102K2R5CA
1,000	20	C052C102M2R5CA

CAPACI–TANCE pF	TOL. %	KEMET PART NUMBER
100 VOLT — C052 SIZE		
1,200	10	C052C122K1R5CA
1,500	10	C052C152K1R5CA
1,500	20	C052C152M1R5CA
1,800	10	C052C182K1R5CA
2,200	10	C052C222K1R5CA
2,200	20	C052C222M1R5CA
2,700	10	C052C272K1R5CA
3,300	10	C052C332K1R5CA
3,300	20	C052C332M1R5CA
3,900	10	C052C392K1R5CA
4,700	10	C052C472K1R5CA
4,700	20	C052C472M1R5CA
5,600	10	C052C562K1R5CA
6,800	10	C052C682K1R5CA
6,800	20	C052C682M1R5CA
8,200	10	C052C822K1R5CA
10,000	10	C052C103K1R5CA
10,000	20	C052C103M1R5CA
50 VOLT — C052 SIZE		
12,000	10	C052C123K5R5CA
15,000	10	C052C153K5R5CA
15,000	20	C052C153M5R5CA
18,000	10	C052C183K5R5CA
22,000	10	C052C223K5R5CA
22,000	20	C052C223M5R5CA
27,000	10	C052C273K5R5CA
33,000	10	C052C333K5R5CA
33,000	20	C052C333M5R5CA
39,000	10	C052C393K5R5CA
47,000	10	C052C473K5R5CA
47,000	20	C052C473M5R5CA
56,000	10	C052C563K5R5CA
68,000	10	C052C683K5R5CA
68,000	20	C052C683M5R5CA
82,000	10	C052C823K5R5CA
100,000	10	C052C104K5R5CA
100,000	20	C052C104M5R5CA
200 VOLT — C062 SIZE		
1,200	10	C062C122K2R5CA
1,500	10	C062C152K2R5CA
1,500	20	C062C152M2R5CA
1,800	10	C062C182K2R5CA
2,200	10	C062C222K2R5CA
2,200	20	C062C222M2R5CA
2,700	10	C062C272K2R5CA
3,300	10	C062C332K2R5CA
3,300	20	C062C332M2R5CA
3,900	10	C062C392K2R5CA
4,700	10	C062C472K2R5CA
4,700	20	C062C472M2R5CA
5,600	10	C062C562K2R5CA
6,800	10	C062C682K2R5CA
6,800	20	C062C682M2R5CA
8,200	10	C062C822K2R5CA
10,000	10	C062C103K2R5CA
10,000	20	C062C103M2R5CA

CAPACI–TANCE pF	TOL. %	KEMET PART NUMBER
100 VOLT — C062 SIZE		
12,000	10	C062C123K1R5CA
15,000	10	C062C153K1R5CA
15,000	20	C062C153M1R5CA
18,000	10	C062C183K1R5CA
22,000	10	C062C223K1R5CA
22,000	20	C062C223M1R5CA
27,000	10	C062C273K1R5CA
33,000	10	C062C333K1R5CA
33,000	20	C062C333M1R5CA
39,000	10	C062C393K1R5CA
47,000	10	C062C473K1R5CA
47,000	20	C062C473M1R5CA
56,000	10	C062C563K1R5CA
68,000	10	C062C683K1R5CA
68,000	20	C062C683M1R5CA
82,000	10	C062C823K1R5CA
100,000	10	C062C104K1R5CA
100,000	20	C062C104M1R5CA
50 VOLT — C062 SIZE		
120,000	10	C062C124K5R5CA
150,000	10	C062C154K5R5CA
150,000	20	C062C154M5R5CA
180,000	10	C062C184K5R5CA
220,000	10	C062C224K5R5CA
220,000	20	C062C224M5R5CA
270,000	10	C062C274K5R5CA
330,000	10	C062C334K5R5CA
330,000	20	C062C334M5R5CA
390,000	10	C062C394K5R5CA
470,000	10	C062C474K5R5CA
470,000	20	C062C474M5R5CA
560,000	10	C062C564K5R5CA
680,000	10	C062C684K5R5CA
680,000	20	C062C684M5R5CA
820,000	10	C062C824K5R5CA
1,000,000	10	C062C105K5R5CA
1,000,000	20	C062C105M5R5CA
50 VOLT — C512 SIZE		
1,000,000	10	C512C105K5X5CA
1,000,000	20	C512C105M5X5CA
1,500,000	10	C512C155K5X5CA
1,500,000	20	C512C155M5X5CA
2,000,000	10	C512C205K5X5CA
2,000,000	20	C512C205M5X5CA
2,200,000	10	C512C225K5X5CA
2,200,000	20	C512C225M5X5CA
100 VOLT — C522 SIZE		
1,000,000	10	C522C105K1X5CA
1,000,000	20	C522C105M1X5CA
50 VOLT — C522 SIZE		
2,700,000	10	C522C275K5X5CA
2,700,000	20	C522C275M5X5CA
3,300,000	10	C522C335K5X5CA
3,300,000	20	C522C335M5X5CA

© KEMET Electronics Corporation, P.O. Box 5928, Greenville, S.C. 29606, (864) 963-6300

CAPACITOR OUTLINE DRAWINGS (AXIAL LEADS)

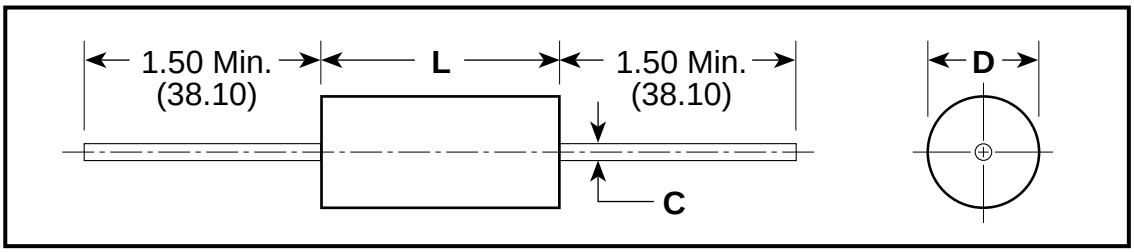

DIMENSIONS — INCHES & (MILLIMETERS)

CASE SIZE	MILITARY EQUIVALENT STYLES	L	D	C
C114	CC75, CCR75	.160 ± .010 (4.06 ± .25)	.090 ± .010 (2.29 ± .25)	.020, +.000, -.003 (.51, +.00, -.08)
C124	CC76, CCR76	.250 ± .010 (6.35 ± .25)	.090 ± .010 (2.29 ± .25)	.020, +.000, -.003 (.51, +.00, -.08)
C192	CC77, CCR77	.390 ± .010 (9.91 ± .25)	.140 ± .010 (3.56 ± .25)	.025, +.002, -.002 (.64, +.05, -.05)
C202	CC78, CCR78	.500 ± .020 (12.70 ± .51)	.250 ± .015 (6.35 ± .38)	.025, +.002, -.002 (.64, +.05, -.05)
C222	CC79, CCR79	.690 ± .030 (17.53 ± .76)	.350 ± .020 (8.89 ± .51)	.025, +.002, -.002 (.64, +.05, -.05)

CAPACITOR OUTLINE DRAWINGS (RADIAL LEADS)

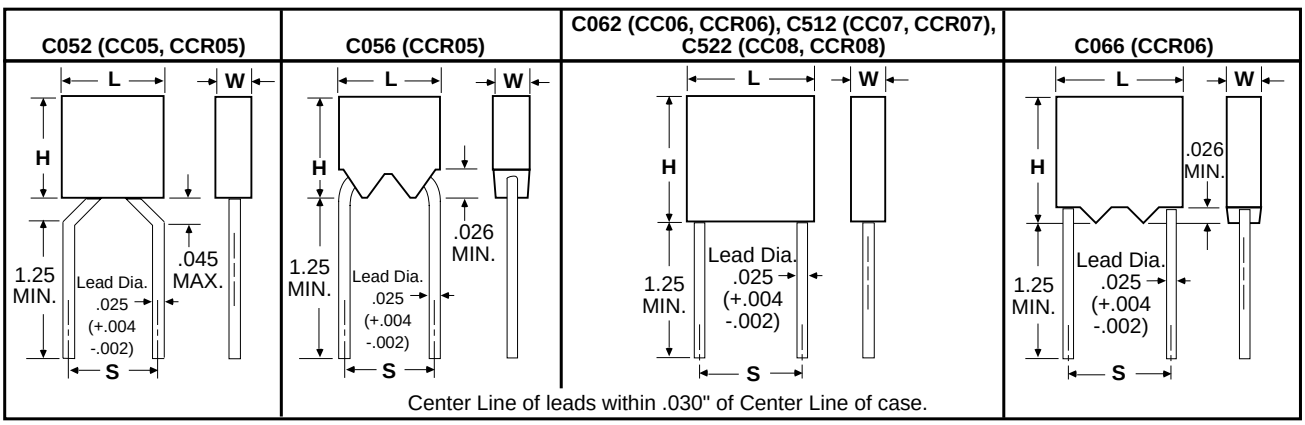

* Leads are .625 minimum when tape and reel packaged

DIMENSIONS — INCHES & (MILLIMETERS)

CASE SIZE	MILITARY EQUIVALENT STYLES	H HEIGHT	L LENGTH	W WIDTH	S LEAD SPACING
C052/ C056	CC05, CCR05	.190 ± .010 (4.83 ± .25)	.190 ± .010 (4.83 ± .25)	.090 ± .010 (2.29 ± .25)	.200 ± .015 (5.08 ± .38)
C062/ C066	CC06, CCR06	.290 ± .010 (7.37 ± .25)	.290 ± .010 (7.37 ± .25)	.090 ± .010 (2.29 ± .25)	.200 ± .015 (5.08 ± .38)
C512	CC07, CCR07	.480 ± .020 (12.19 ± .51)	.480 ± .020 (12.19 ± .51)	.140 ± .010 (3.56 ± .25)*	.400 ± .020 (10.16 ± .51)
C522	CC08, CCR08	.480 ± .020 (12.19 ± .51)	.480 ± .020 (12.19 ± .51)	.240 ± .010 (6.10 ± .25)	.400 ± .020 (10.16 ± .51)

* 0.200 (5.08) maximum for 100,000 pF only.

For packaging information, see pages 39, 40, and 41.

ORDERING INFORMATION

C 052 G 102 J 1 G 5 C R**

CERAMIC

***CASE SIZE**
(See Table Below)

SPECIFICATION
Military
G — MIL-PRF-20

CAPACITANCE
In picofarad code: First two digits are significant figures and third is number of zeroes following (except 9 indicates division by 10). Examples: 0.1 µF = 100,000 pF = 104 and 9.1 pF = 919. See tables for Standard Values.

CAPACITANCE TOLERANCE

Standard		Others	
K — ±10%	G — ±2%	C — ±0.25 pF	
J — ±5%	F — ±1%	D — ±0.5 pF	
	B — ±0.1 pF		

WORKING VOLTAGE
1 — 100
2 — 200
5 — 50

FAILURE RATE
A — Not Applicable (Std.)
M — 1.0%
P — 0.1%
R — 0.01%
S — 0.001%

LEAD MATERIAL
C — Standard

INTERNAL CONSTRUCTION
5 — Standard

Standard tolerances for each Series are shown in the repetitive parts lists.

*CASE SIZES	
RADIAL	AXIAL
C052	C114
C056	C124
C062	C192
C066	C202
C512	C222
C522	

TEMPERATURE CHARACTERISTIC

KEMET Designator	Military Equivalent	EIA Equivalent	Capacitance Change With Temp.		
			Temp. Range, °C	Measured Without DC Bias Voltage	Measured With Bias (Rated Voltage)
G (Ultra Stable)	*CG (See below)	C0G (NPO)	-55 to +125	±30 ppm/°C*	±30 ppm/°C*

*CH — ±60 ppm/°C 8.2 pF-18.0 pF.
*CJ — ±120 ppm/°C 4.3 pF-7.5 pF.
*CK — ±250 ppm/°C 2.2 pF-3.9 pF
*CX — not measurable 0.1 pF-2.0 pF.

****Part Number Example: C052G102J1G5CR (14 digits – no spaces)**

CAPACITOR MARKING

CC(R) 75, 76

JCK	"J" Brand (CCR only), Temperature Characteristic
2R2	Capacitance
CM5	Capacitance Tolerance, Failure Rate (CCR only), Year Code
11AK	Lot Code, Trademark (K)

CC(R) 77

CCR77C G102JM	Military Designation (Type, Temperature Characteristic, Capacitance, Tolerance, Failure Rate)
J31433	"J" Brand (CCR only), FSCM (Federal Source Code)
0504A	Date/Lot Code

CC(R) 78

CCR78CG 103FR	Military Designation (Type, Temperature Characteristic, Capacitance, Tolerance, Failure Rate)
JAN K	"JAN" Brand (CCR only), Trademark (K)
31433	FSCM (Federal Source Code)
100V	Voltage
0504A	Date/Lot Code

CC(R) 79

CCR79CG 103KM	Military Designation (Type, Temperature Characteristic, Capacitance, Tolerance, Failure Rate)
JAN K	"JAN" Brand (CCR only), Trademark
31433	FSCM (Federal Source Code)
200V	Voltage
0504A	Date/Lot Code

CC(R) 05

FRONT

CCR0 5CH1 00FR	Military Designation (Type, Temperature Characteristic, Capacitance, Tolerance, Failure Rate)

** For the standoff style, a "V" is added after the failure rate, or last character.

REAR

0504	Date Code
AJ3 1433	Lot Code, "J" Brand (CCR only), FSCM (Federal Source Code)

CC(R) 06

FRONT

CCR06 CG102 JS	Military Designation (Type, Temperature Characteristic, Capacitance, Tolerance, Failure Rate)

** For the standoff style, a "V" is added after the failure rate, or last character.

REAR

0504A	Date/LotCode
J100V	"J" Brand (CCR only), Voltage
31433	FSCM (Federal Source Code)

CC(R) 07

CCR07CG 472KM	Military Designation (Type, Temperature Characteristic, Capacitance, Tolerance, Failure Rate)
JAN KEMET	"JAN" Brand, Trademark
31433	FSCM (Federal Source Code)
200V 0504A	Voltage, Date/Lot Code

CC(R) 08

CCR08CG 472KM	Military Designation (Type, Temperature Characteristic, Capacitance, Tolerance, Failure Rate)
JAN KEMET	"JAN" Brand, Trademark
31433	FSCM (Federal Source Code)
200V 0509A	Voltage, Date/Lot Code

© KEMET Electronics Corporation, P.O. Box 5928, Greenville, S.C. 29606, (864) 963-6300

KEMET

RATINGS & PART NUMBER REFERENCE

CAP. pF	KEMET PART NUMBER	MILITARY STYLE CC	MILITARY STYLE CCR
200 VOLT — C114 (CC(R)75 PER MIL-PRF-20/27)			
1.0	C114G109(2)2G5C(1)	CC75CX1R0(2)	CCR75CX1R0(2)(1)
1.1	C114G119(2)2G5C(1)	CC75CX1R1(2)	CCR75CX1R1(2)(1)
1.2	C114G129(2)2G5C(1)	CC75CX1R2(2)	CCR75CX1R2(2)(1)
1.3	C114G139(2)2G5C(1)	CC75CX1R3(2)	CCR75CX1R3(2)(1)
1.5	C114G159(2)2G5C(1)	CC75CX1R5(2)	CCR75CX1R5(2)(1)
1.6	C114G169(2)2G5C(1)	CC75CX1R6(2)	CCR75CX1R6(2)(1)
1.8	C114G189(2)2G5C(1)	CC75CX1R8(2)	CCR75CX1R8(2)(1)
2.0	C114G209(2)2G5C(1)	CC75CX2R0(2)	CCR75CX2R0(2)(1)
2.2	C114G229(2)2G5C(1)	CC75CK2R2(2)	CCR75CK2R2(2)(1)
2.4	C114G249(2)2G5C(1)	CC75CK2R4(2)	CCR75CK2R4(2)(1)
2.7	C114G279(3)2G5C(1)	CC75CK2R7(3)	CCR75CK2R7(3)(1)
3.0	C114G309(3)2G5C(1)	CC75CK3R0(3)	CCR75CK3R0(3)(1)
3.3	C114G339(3)2G5C(1)	CC75CK3R3(3)	CCR75CK3R3(3)(1)
3.6	C114G369(3)2G5C(1)	CC75CK3R6(3)	CCR75CK3R6(3)(1)
3.9	C114G399(3)2G5C(1)	CC75CK3R9(3)	CCR75CK3R9(3)(1)
4.3	C114G439(3)2G5C(1)	CC75CJ4R3(3)	CCR75CJ4R3(3)(1)
4.7	C114G479(3)2G5C(1)	CC75CJ4R7(3)	CCR75CJ4R7(3)(1)
5.1	C114G519(3)2G5C(1)	CC75CJ5R1(3)	CCR75CJ5R1(3)(1)
5.6	C114G569(3)2G5C(1)	CC75CJ5R6(3)	CCR75CJ5R6(3)(1)
6.2	C114G629(3)2G5C(1)	CC75CJ6R2(3)	CCR75CJ6R2(3)(1)
6.8	C114G689(3)2G5C(1)	CC75CJ6R8(3)	CCR75CJ6R8(3)(1)
7.5	C114G759(3)2G5C(1)	CC75CJ7R5(3)	CCR75CJ7R5(3)(1)
8.2	C114G829(3)2G5C(1)	CC75CH8R2(3)	CCR75CH8R2(3)(1)
9.1	C114G919(3)2G5C(1)	CC75CH9R1(3)	CCR75CH9R1(3)(1)
10.0	C114G100(4)2G5C(1)	CC75CH100(4)	CCR75CH100(4)(1)
11.0	C114G110(4)2G5C(1)	CC75CH110(4)	CCR75CH110(4)(1)
12.0	C114G120(4)2G5C(1)	CC75CH120(4)	CCR75CH120(4)(1)
13.0	C114G130(4)2G5C(1)	CC75CH130(4)	CCR75CH130(4)(1)
15.0	C114G150(4)2G5C(1)	CC75CH150(4)	CCR75CH150(4)(1)
16.0	C114G160(4)2G5C(1)	CC75CH160(4)	CCR75CH160(4)(1)
18.0	C114G180(4)2G5C(1)	CC75CH180(4)	CCR75CH180(4)(1)
20.0	C114G200(4)2G5C(1)	CC75CG200(4)	CCR75CG200(4)(1)
22.0	C114G220(4)2G5C(1)	CC75CG220(4)	CCR75CG220(4)(1)
24.0	C114G240(4)2G5C(1)	CC75CG240(4)	CCR75CG240(4)(1)
27.0	C114G270(4)2G5C(1)	CC75CG270(4)	CCR75CG270(4)(1)
30.0	C114G300(4)2G5C(1)	CC75CG300(4)	CCR75CG300(4)(1)
33.0	C114G330(4)2G5C(1)	CC75CG330(4)	CCR75CG330(4)(1)
36.0	C114G360(4)2G5C(1)	CC75CG360(4)	CCR75CG360(4)(1)
39.0	C114G390(4)2G5C(1)	CC75CG390(4)	CCR75CG390(4)(1)
43.0	C114G430(4)2G5C(1)	CC75CG430(4)	CCR75CG430(4)(1)
47.0	C114G470(4)2G5C(1)	CC75CG470(4)	CCR75CG470(4)(1)
51.0	C114G510(4)2G5C(1)	CC75CG510(4)	CCR75CG510(4)(1)
56.0	C114G560(4)2G5C(1)	CC75CG560(4)	CCR75CG560(4)(1)
62.0	C114G620(4)2G5C(1)	CC75CG620(4)	CCR75CG620(4)(1)
68.0	C114G680(4)2G5C(1)	CC75CG680(4)	CCR75CG680(4)(1)
75.0	C114G750(4)2G5C(1)	CC75CG750(4)	CCR75CG750(4)(1)

To complete Part Number, insert the following letters:
(1) Available Failure Rates: A (CC styles only); M, P, R & S (CCR styles only).
(2) Available Capacitance Tolerances: B, C.
(3) Available Capacitance Tolerances: B, C, D.
(4) Available Capacitance Tolerances: F, G, J.

CAP. pF	KEMET PART NUMBER	MILITARY STYLE CC	MILITARY STYLE CCR
100 VOLT — C114 (CC(R)75 PER MIL-PRF-20/27)			
82.0	C114G820(4)1G5C(1)	CC75CG820(4)	CCR75CG820(4)(1)
91.0	C114G910(4)1G5C(1)	CC75CG910(4)	CCR75CG910(4)(1)
100.0	C114G101(4)1G5C(1)	CC75CG101(4)	CCR75CG101(4)(1)
110.0	C114G111(4)1G5C(1)	CC75CG111(4)	CCR75CG111(4)(1)
120.0	C114G121(4)1G5C(1)	CC75CG121(4)	CCR75CG121(4)(1)
130.0	C114G131(4)1G5C(1)	CC75CG131(4)	CCR75CG131(4)(1)
150.0	C114G151(4)1G5C(1)	CC75CG151(4)	CCR75CG151(4)(1)
160.0	C114G161(4)1G5C(1)	CC75CG161(4)	CCR75CG161(4)(1)
180.0	C114G181(4)1G5C(1)	CC75CG181(4)	CCR75CG181(4)(1)
200.0	C114G201(4)1G5C(1)	CC75CG201(4)	CCR75CG201(4)(1)
220.0	C114G221(4)1G5C(1)	CC75CG221(4)	CCR75CG221(4)(1)
240.0	C114G241(4)1G5C(1)	CC75CG241(4)	CCR75CG241(4)(1)
50 VOLT — C114 (CC(R)75 PER MIL-PRF-20/27)			
270.0	C114G271(4)5G5C(1)	CC75CG271(4)	CCR75CG271(4)(1)
300.0	C114G301(4)5G5C(1)	CC75CG301(4)	CCR75CG301(4)(1)
330.0	C114G331(4)5G5C(1)	CC75CG331(4)	CCR75CG331(4)(1)
360.0	C114G361(4)5G5C(1)	CC75CG361(4)	CCR75CG361(4)(1)
390.0	C114G391(4)5G5C(1)	CC75CG391(4)	CCR75CG391(4)(1)
430.0	C114G431(4)5G5C(1)	CC75CG431(4)	CCR75CG431(4)(1)
470.0	C114G471(4)5G5C(1)	CC75CG471(4)	CCR75CG471(4)(1)
510.0	C114G511(4)5G5C(1)	CC75CG511(4)	CCR75CG511(4)(1)
560.0	C114G561(4)5G5C(1)	CC75CG561(4)	CCR75CG561(4)(1)
620.0	C114G621(4)5G5C(1)	CC75CG621(4)	CCR75CG621(4)(1)
680.0	C114G681(4)5G5C(1)	CC75CG681(4)	CCR75CG681(4)(1)
200 VOLT — C124 (CC(R)76 PER MIL-PRF-20/28)			
82.0	C124G820(4)2G5C(1)	CC76CG820(4)	CCR76CG820(4)(1)
91.0	C124G910(4)2G5C(1)	CC76CG910(4)	CCR76CG910(4)(1)
100.0	C124G101(4)2G5C(1)	CC76CG101(4)	CCR76CG101(4)(1)
110.0	C124G111(4)2G5C(1)	CC76CG111(4)	CCR76CG111(4)(1)
120.0	C124G121(4)2G5C(1)	CC76CG121(4)	CCR76CG121(4)(1)
130.0	C124G131(4)2G5C(1)	CC76CG131(4)	CCR76CG131(4)(1)
100 VOLT — C124 (CC(R)76 PER MIL-PRF-20/28)			
270.0	C124G271(4)1G5C(1)	CC76CG271(4)	CCR76CG271(4)(1)
300.0	C124G301(4)1G5C(1)	CC76CG301(4)	CCR76CG301(4)(1)
330.0	C124G331(4)1G5C(1)	CC76CG331(4)	CCR76CG331(4)(1)
360.0	C124G361(4)1G5C(1)	CC76CG361(4)	CCR76CG361(4)(1)
390.0	C124G391(4)1G5C(1)	CC76CG391(4)	CCR76CG391(4)(1)
430.0	C124G431(4)1G5C(1)	CC76CG431(4)	CCR76CG431(4)(1)
470.0	C124G471(4)1G5C(1)	CC76CG471(4)	CCR76CG471(4)(1)
510.0	C124G511(4)1G5C(1)	CC76CG511(4)	CCR76CG511(4)(1)
560.0	C124G561(4)1G5C(1)	CC76CG561(4)	CCR76CG561(4)(1)
620.0	C124G621(4)1G5C(1)	CC76CG621(4)	CCR76CG621(4)(1)
680.0	C124G681(4)1G5C(1)	CC76CG681(4)	CCR76CG681(4)(1)
50 VOLT — C124 (CC(R)76 PER MIL-PRF-20/28)			
750.0	C124G751(4)5G5C(1)	CC76CG751(4)	CCR76CG751(4)(1)
820.0	C124G821(4)5G5C(1)	CC76CG821(4)	CCR76CG821(4)(1)
910.0	C124G911(4)5G5C(1)	CC76CG911(4)	CCR76CG911(4)(1)
1,000.0	C124G102(4)5G5C(1)	CC76CG102(4)	CCR76CG102(4)(1)
200 VOLT — C192 (CC(R)77 PER MIL-PRF-20/29)			
150.0	C192G151(4)2G5C(1)	CC77CG151(4)	CCR77CG151(4)(1)
160.0	C192G161(4)2G5C(1)	CC77CG161(4)	CCR77CG161(4)(1)
180.0	C192G181(4)2G5C(1)	CC77CG181(4)	CCR77CG181(4)(1)
200.0	C192G201(4)2G5C(1)	CC77CG201(4)	CCR77CG201(4)(1)
220.0	C192G221(4)2G5C(1)	CC77CG221(4)	CCR77CG221(4)(1)
240.0	C192G241(4)2G5C(1)	CC77CG241(4)	CCR77CG241(4)(1)
270.0	C192G271(4)2G5C(1)	CC77CG271(4)	CCR77CG271(4)(1)
300.0	C192G301(4)2G5C(1)	CC77CG301(4)	CCR77CG301(4)(1)
330.0	C192G331(4)2G5C(1)	CC77CG331(4)	CCR77CG331(4)(1)
360.0	C192G361(4)2G5C(1)	CC77CG361(4)	CCR77CG361(4)(1)
390.0	C192G391(4)2G5C(1)	CC77CG391(4)	CCR77CG391(4)(1)
430.0	C192G431(4)2G5C(1)	CC77CG431(4)	CCR77CG431(4)(1)
470.0	C192G471(4)2G5C(1)	CC77CG471(4)	CCR77CG471(4)(1)
510.0	C192G511(4)2G5C(1)	CC77CG511(4)	CCR77CG511(4)(1)
560.0	C192G561(4)2G5C(1)	CC77CG561(4)	CCR77CG561(4)(1)
620.0	C192G621(4)2G5C(1)	CC77CG621(4)	CCR77CG621(4)(1)
680.0	C192G681(4)2G5C(1)	CC77CG681(4)	CCR77CG681(4)(1)

RATINGS & PART NUMBER REFERENCE

CAP. pF	KEMET PART NUMBER	MILITARY STYLE CC	MILITARY STYLE CCR
100 VOLT — C192 (CC(R)77 PER MIL-PRF-20/29)			
750.0	C192G751(4)1G5C(1)	CC77CG751(4)	CCR77CG751(4)(1)
820.0	C192G821(4)1G5C(1)	CC77CG821(4)	CCR77CG821(4)(1)
910.0	C192G911(4)1G5C(1)	CC77CG911(4)	CCR77CG911(4)(1)
1,000.0	C192G102(4)1G5C(1)	CC77CG102(4)	CCR77CG102(4)(1)
1,100.0	C192G112(4)1G5C(1)	CC77CG112(4)	CCR77CG112(4)(1)
1,200.0	C192G122(4)1G5C(1)	CC77CG122(4)	CCR77CG122(4)(1)
1,300.0	C192G132(4)1G5C(1)	CC77CG132(4)	CCR77CG132(4)(1)
1,500.0	C192G152(4)1G5C(1)	CC77CG152(4)	CCR77CG152(4)(1)
1,600.0	C192G162(4)1G5C(1)	CC77CG162(4)	CCR77CG162(4)(1)
1,800.0	C192G182(4)1G5C(1)	CC77CG182(4)	CCR77CG182(4)(1)
2,000.0	C192G202(4)1G5C(1)	CC77CG202(4)	CCR77CG202(4)(1)
2,200.0	C192G222(4)1G5C(1)	CC77CG222(4)	CCR77CG222(4)(1)
50 VOLT — C192 (CC(R)77 PER MIL-PRF-20/29)			
2,400.0	C192G242(4)5G5C(1)	CC77CG242(4)	CCR77CG242(4)(1)
2,700.0	C192G272(4)5G5C(1)	CC77CG272(4)	CCR77CG272(4)(1)
3,000.0	C192G302(4)5G5C(1)	CC77CG302(4)	CCR77CG302(4)(1)
3,300.0	C192G332(4)5G5C(1)	CC77CG332(4)	CCR77CG332(4)(1)
3,600.0	C192G362(4)5G5C(1)	CC77CG362(4)	CCR77CG362(4)(1)
3,900.0	C192G392(4)5G5C(1)	CC77CG392(4)	CCR77CG392(4)(1)
4,300.0	C192G432(4)5G5C(1)	CC77CG432(4)	CCR77CG432(4)(1)
4,700.0	C192G472(4)5G5C(1)	CC77CG472(4)	CCR77CG472(4)(1)
5,100.0	C192G512(5)5G5C(1)	CC77CG512(5)	CCR77CG512(5)(1)
5,600.0	C192G562(5)5G5C(1)	CC77CG562(5)	CCR77CG562(5)(1)
200 VOLT — C202 (CC(R)78 PER MIL-PRF-20/30)			
820.0	C202G821(5)2G5C(1)	CC78CG821(5)	CCR78CG821(5)(1)
1,000.0	C202G102(5)2G5C(1)	CC78CG102(5)	CCR78CG102(5)(1)
1,200.0	C202G122(5)2G5C(1)	CC78CG122(5)	CCR78CG122(5)(1)
1,500.0	C202G152(5)2G5C(1)	CC78CG152(5)	CCR78CG152(5)(1)
1,800.0	C202G182(5)2G5C(1)	CC78CG182(5)	CCR78CG182(5)(1)
2,200.0	C202G222(5)2G5C(1)	CC78CG222(5)	CCR78CG222(5)(1)
2,700.0	C202G272(5)2G5C(1)	CC78CG272(5)	CCR78CG272(5)(1)
3,300.0	C202G332(5)2G5C(1)	CC78CG332(5)	CCR78CG332(5)(1)

CAP. pF	KEMET PART NUMBER	MILITARY STYLE CC	MILITARY STYLE CCR
100 VOLT — C202 (CC(R)78 PER MIL-PRF-20/30)			
3,900.0	C202G392(5)1G5C(1)	CC78CG392(5)	CCR78CG392(5)(1)
4,700.0	C202G472(5)1G5C(1)	CC78CG472(5)	CCR78CG472(5)(1)
5,600.0	C202G562(5)1G5C(1)	CC78CG562(5)	CCR78CG562(5)(1)
6,800.0	C202G682(5)1G5C(1)	CC78CG682(5)	CCR78CG682(5)(1)
8,200.0	C202G822(5)1G5C(1)	CC78CG822(5)	CCR78CG822(5)(1)
10,000.0	C202G103(5)1G5C(1)	CC78CG103(5)	CCR78CG103(5)(1)
12,000.0	C202G123(5)1G5C(1)	CC78CG123(5)	CCR78CG123(5)(1)
50 VOLT — C202 (CC(R)78 PER MIL-PRF-20/30)			
15,000.0	C202G153(5)5G5C(1)	CC78CG153(5)	CCR78CG153(5)(1)
18,000.0	C202G183(5)5G5C(1)	CC78CG183(5)	CCR78CG183(5)(1)
22,000.0	C202G223(5)5G5C(1)	CC78CG223(5)	CCR78CG223(5)(1)
27,000.0	C202G273(5)5G5C(1)	CC78CG273(5)	CCR78CG273(5)(1)
200 VOLT — C222 (CC(R)79 PER MIL-PRF-20/31)			
3,900.0	C222G392(5)2G5C(1)	CC79CG392(5)	CCR79CG392(5)(1)
4,700.0	C222G472(5)2G5C(1)	CC79CG472(5)	CCR79CG472(5)(1)
5,600.0	C222G562(5)2G5C(1)	CC79CG562(5)	CCR79CG562(5)(1)
6,800.0	C222G682(5)2G5C(1)	CC79CG682(5)	CCR79CG682(5)(1)
8,200.0	C222G822(5)2G5C(1)	CC79CG822(5)	CCR79CG822(5)(1)
10,000.0	C222G103(5)2G5C(1)	CC79CG103(5)	CCR79CG103(5)(1)
100 VOLT — C222 (CC(R)79 PER MIL-PRF-20/31)			
15,000.0	C222G153(5)1G5C(1)	CC79CG153(5)	CCR79CG153(5)(1)
18,000.0	C222G183(5)1G5C(1)	CC79CG183(5)	CCR79CG183(5)(1)
22,000.0	C222G223(5)1G5C(1)	CC79CG223(5)	CCR79CG223(5)(1)
27,000.0	C222G273(5)1G5C(1)	CC79CG273(5)	CCR79CG273(5)(1)
33,000.0	C222G333(5)1G5C(1)	CC79CG333(5)	CCR79CG333(5)(1)
39,000.0	C222G393(5)1G5C(1)	CC79CG393(5)	CCR79CG393(5)(1)
50 VOLT — C222 (CC(R)79 PER MIL-PRF-20/31)			
47,000.0	C222G473(5)5G5C(1)	CC79CG473(5)	CCR79CG473(5)(1)
56,000.0	C222G563(5)5G5C(1)	CC79CG563(5)	CCR79CG563(5)(1)
68,000.0	C222G683(5)5G5C(1)	CC79CG683(5)	CCR79CG683(5)(1)
82,000.0	C222G823(5)5G5C(1)	CC79CG823(5)	CCR79CG823(5)(1)

To complete Part Number, insert the following letters:
(1) Available Failure Rates: A (CC styles only); M, P, R & S (CCR styles only).
(2) Available Capacitance Tolerances: B, C.
(3) Available Capacitance Tolerances: B, C, D.
(4) Available Capacitance Tolerances: F, G, J.
(5) Available Capacitance Tolerances: F, G, J, K.

© KEMET Electronics Corporation, P.O. Box 5928, Greenville, S.C. 29606, (864) 963-6300

RATINGS & PART NUMBER REFERENCE

CAP. pF	KEMET PART NUMBER	MILITARY STYLE CC	MILITARY STYLE CCR
200 VOLT — C052/C056 SIZE (CC(R)05 PER MIL-PRF-20/35)			
1.0	C05(6)G109(2)2G5C(1)	CC05CX1R0(2)	CCR05CX1R0(2)(1)(7)
1.1	C05(6)G119(2)2G5C(1)	CC05CX1R1(2)	CCR05CX1R1(2)(1)(7)
1.2	C05(6)G129(2)2G5C(1)	CC05CX1R2(2)	CCR05CX1R2(2)(1)(7)
1.3	C05(6)G139(2)2G5C(1)	CC05CX1R3(2)	CCR05CX1R3(2)(1)(7)
1.5	C05(6)G159(2)2G5C(1)	CC05CX1R5(2)	CCR05CX1R5(2)(1)(7)
1.6	C05(6)G169(2)2G5C(1)	CC05CX1R6(2)	CCR05CX1R6(2)(1)(7)
1.8	C05(6)G189(2)2G5C(1)	CC05CX1R8(2)	CCR05CX1R8(2)(1)(7)
2.0	C05(6)G209(2)2G5C(1)	CC05CX2R0(2)	CCR05CX2R0(2)(1)(7)
2.2	C05(6)G229(2)2G5C(1)	CC05CK2R2(2)	CCR05CK2R2(2)(1)(7)
2.4	C05(6)G249(2)2G5C(1)	CC05CK2R4(2)	CCR05CK2R4(2)(1)(7)
2.7	C05(6)G279(3)2G5C(1)	CC05CK2R7(3)	CCR05CK2R7(3)(1)(7)
3.0	C05(6)G309(3)2G5C(1)	CC05CK3R0(3)	CCR05CK3R0(3)(1)(7)
3.3	C05(6)G339(3)2G5C(1)	CC05CK3R3(3)	CCR05CK3R3(3)(1)(7)
3.6	C05(6)G369(3)2G5C(1)	CC05CK3R6(3)	CCR05CK3R6(3)(1)(7)
3.9	C05(6)G399(3)2G5C(1)	CC05CK3R9(3)	CCR05CK3R9(3)(1)(7)
4.3	C05(6)G439(3)2G5C(1)	CC05CJ4R3(3)	CCR05CJ4R3(3)(1)(7)
4.7	C05(6)G479(3)2G5C(1)	CC05CJ4R7(3)	CCR05CJ4R7(3)(1)(7)
5.1	C05(6)G519(3)2G5C(1)	CC05CJ5R1(3)	CCR05CJ5R1(3)(1)(7)
5.6	C05(6)G569(3)2G5C(1)	CC05CJ5R6(3)	CCR05CJ5R6(3)(1)(7)
6.2	C05(6)G629(3)2G5C(1)	CC05CJ6R2(3)	CCR05CJ6R2(3)(1)(7)
6.8	C05(6)G689(3)2G5C(1)	CC05CJ6R8(3)	CCR05CJ6R8(3)(1)(7)
7.5	C05(6)G759(3)2G5C(1)	CC05CJ7R5(3)	CCR05CJ7R5(3)(1)(7)
8.2	C05(6)G829(3)2G5C(1)	CC05CH8R2(3)	CCR05CH8R2(3)(1)(7)
9.1	C05(6)G919(3)2G5C(1)	CC05CH9R1(3)	CCR05CH9R1(3)(1)(7)
10.0	C05(6)G100(4)2G5C(1)	CC05CH100(4)	CCR05CH100(4)(1)(7)
11.0	C05(6)G110(4)2G5C(1)	CC05CH110(4)	CCR05CH110(4)(1)(7)
12.0	C05(6)G120(4)2G5C(1)	CC05CH120(4)	CCR05CH120(4)(1)(7)
13.0	C05(6)G130(4)2G5C(1)	CC05CH130(4)	CCR05CH130(4)(1)(7)
15.0	C05(6)G150(4)2G5C(1)	CC05CH150(4)	CCR05CH150(4)(1)(7)
16.0	C05(6)G160(4)2G5C(1)	CC05CH160(4)	CCR05CH160(4)(1)(7)
18.0	C05(6)G180(4)2G5C(1)	CC05CH180(4)	CCR05CH180(4)(1)(7)
20.0	C05(6)G200(4)2G5C(1)	CC05CG200(4)	CCR05CG200(4)(1)(7)
22.0	C05(6)G220(4)2G5C(1)	CC05CG220(4)	CCR05CG220(4)(1)(7)
24.0	C05(6)G240(4)2G5C(1)	CC05CG240(4)	CCR05CG240(4)(1)(7)
27.0	C05(6)G270(4)2G5C(1)	CC05CG270(4)	CCR05CG270(4)(1)(7)
30.0	C05(6)G300(4)2G5C(1)	CC05CG300(4)	CCR05CG300(4)(1)(7)
33.0	C05(6)G330(4)2G5C(1)	CC05CG330(4)	CCR05CG330(4)(1)(7)
36.0	C05(6)G360(4)2G5C(1)	CC05CG360(4)	CCR05CG360(4)(1)(7)
39.0	C05(6)G390(4)2G5C(1)	CC05CG390(4)	CCR05CG390(4)(1)(7)
43.0	C05(6)G430(4)2G5C(1)	CC05CG430(4)	CCR05CG430(4)(1)(7)
47.0	C05(6)G470(4)2G5C(1)	CC05CG470(4)	CCR05CG470(4)(1)(7)
51.0	C05(6)G510(4)2G5C(1)	CC05CG510(4)	CCR05CG510(4)(1)(7)

To complete Part Number, insert the following letters:
(1) Available Failure Rates: A (CC styles only); M, P, R & S (CCR styles only).
(2) Available Capacitance Tolerances: B, C.
(3) Available Capacitance Tolerances: B, C, D.
(4) Available Capacitance Tolerances: F, G, J.
(5) Available Capacitance Tolerances: F, G, J, K.
(6) Insert "2" for standard design, Style C052G
Insert "6" for stand-off design, Style C056G } Stand-offs are available only as CCR's, not available as CC.
(7) Add "V" for stand-off design, Style C056G
And leave blank for the flat bottom design (C052G)

CAP. pF	KEMET PART NUMBER	MILITARY STYLE CC	MILITARY STYLE CCR
200 VOLT — C052/C056 SIZE (CC(R)05 PER MIL-PRF-20/35)			
56.0	C05(6)G560(4)2G5C(1)	CC05CG560(4)	CCR05CG560(4)(1)(7)
62.0	C05(6)G620(4)2G5C(1)	CC05CG620(4)	CCR05CG620(4)(1)(7)
68.0	C05(6)G680(4)2G5C(1)	CC05CG680(4)	CCR05CG680(4)(1)(7)
75.0	C05(6)G750(4)2G5C(1)	CC05CG750(4)	CCR05CG750(4)(1)(7)
82.0	C05(6)G820(4)2G5C(1)	CC05CG820(4)	CCR75CG820(4)(1)(7)
91.0	C05(6)G910(4)2G5C(1)	CC05CG910(4)	CCR05CG910(4)(1)(7)
100.0	C05(6)G101(4)2G5C(1)	CC05CG101(4)	CCR05CG101(4)(1)(7)
110.0	C05(6)G111(4)2G5C(1)	CC05CG111(4)	CCR05CG111(4)(1)(7)
120.0	C05(6)G121(4)2G5C(1)	CC05CG121(4)	CCR05CG121(4)(1)(7)
130.0	C05(6)G131(4)2G5C(1)	CC05CG131(4)	CCR05CG131(4)(1)(7)
150.0	C05(6)G151(4)2G5C(1)	CC05CG151(4)	CCR05CG151(4)(1)(7)
160.0	C05(6)G161(4)2G5C(1)	CC05CG161(4)	CCR05CG161(4)(1)(7)
180.0	C05(6)G181(4)2G5C(1)	CC05CG181(4)	CCR05CG181(4)(1)(7)
200.0	C05(6)G201(4)2G5C(1)	CC05CG201(4)	CCR05CG201(4)(1)(7)
220.0	C05(6)G221(4)2G5C(1)	CC05CG221(4)	CCR05CG221(4)(1)(7)
240.0	C05(6)G241(4)2G5C(1)	CC05CG241(4)	CCR05CG241(4)(1)(7)
270.0	C05(6)G271(4)2G5C(1)	CC05CG271(4)	CCR05CG271(4)(1)(7)
300.0	C05(6)G301(4)2G5C(1)	CC05CG301(4)	CCR05CG301(4)(1)(7)
330.0	C05(6)G331(4)2G5C(1)	CC05CG331(4)	CCR05CG331(4)(1)(7)
100 VOLT — C052/C056 SIZE (CC(R)05 PER MIL-PRF-20/35)			
360.0	C05(6)G361(4)1G5C(1)	CC05CG361(4)	CCR05CG361(4)(1)(7)
390.0	C05(6)G391(4)1G5C(1)	CC05CG391(4)	CCR05CG391(4)(1)(7)
430.0	C05(6)G431(4)1G5C(1)	CC05CG431(4)	CCR05CG431(4)(1)(7)
470.0	C05(6)G471(4)1G5C(1)	CC05CG471(4)	CCR05CG471(4)(1)(7)
510.0	C05(6)G511(4)1G5C(1)	CC05CG511(4)	CCR05CG511(4)(1)(7)
560.0	C05(6)G561(4)1G5C(1)	CC05CG561(4)	CCR05CG561(4)(1)(7)
620.0	C05(6)G621(4)1G5C(1)	CC05CG621(4)	CCR05CG621(4)(1)(7)
680.0	C05(6)G681(4)1G5C(1)	CC05CG681(4)	CCR05CG681(4)(1)(7)
750.0	C05(6)G751(4)1G5C(1)	CC05CG751(4)	CCR05CG751(4)(1)(7)
820.0	C05(6)G821(4)1G5C(1)	CC05CG821(4)	CCR05CG821(4)(1)(7)
910.0	C05(6)G911(4)1G5C(1)	CC05CG911(4)	CCR05CG911(4)(1)(7)
1,000.0	C05(6)G102(4)1G5C(1)	CC05CG102(4)	CCR05CG102(4)(1)(7)
1,100.0	C05(6)G112(4)1G5C(1)	CC05CG112(4)	CCR05CG112(4)(1)(7)
1,200.0	C05(6)G122(4)1G5C(1)	CC05CG122(4)	CCR05CG122(4)(1)(7)
1,300.0	C05(6)G132(4)1G5C(1)	CC05CG132(4)	CCR05CG132(4)(1)(7)
1,500.0	C05(6)G152(4)1G5C(1)	CC05CG152(4)	CCR05CG152(4)(1)(7)
1,600.0	C05(6)G162(4)1G5C(1)	CC05CG162(4)	CCR05CG162(4)(1)(7)
1,800.0	C05(6)G182(4)1G5C(1)	CC05CG182(4)	CCR05CG182(4)(1)(7)
50 VOLT — C052/C056 SIZE (CC(R)05 PER MIL-PRF-20/35)			
2,000.0	C05(6)G202(4)5G5C(1)	CC05CG202(4)	CCR05CG202(4)(1)(7)
2,200.0	C05(6)G222(4)5G5C(1)	CC05CG222(4)	CCR05CG222(4)(1)(7)
2,400.0	C05(6)G242(4)5G5C(1)	CC05CG242(4)	CCR05CG242(4)(1)(7)
2,700.0	C05(6)G272(4)5G5C(1)	CC05CG272(4)	CCR05CG272(4)(1)(7)
3,000.0	C05(6)G302(4)5G5C(1)	CC05CG302(4)	CCR05CG302(4)(1)(7)
3,300.0	C05(6)G332(4)5G5C(1)	CC05CG332(4)	CCR05CG332(4)(1)(7)

RATINGS & PART NUMBER REFERENCE

CAP. pF	KEMET PART NUMBER	MILITARY STYLE CC	MILITARY STYLE CCR
200 VOLT — C062/C066 SIZE (CC(R)06 PER MIL-PRF-20/36)			
360.0	C06(6)G361(4)2G5C(1)	CC06CG361(4)	CCR06CG361(4)(1)(7)
390.0	C06(6)G391(4)2G5C(1)	CC06CG391(4)	CCR06CG391(4)(1)(7)
430.0	C06(6)G431(4)2G5C(1)	CC06CG431(4)	CCR06CG431(4)(1)(7)
470.0	C06(6)G471(4)2G5C(1)	CC06CG471(4)	CCR06CG471(4)(1)(7)
510.0	C06(6)G511(4)2G5C(1)	CC06CG511(4)	CCR06CG511(4)(1)(7)
560.0	C06(6)G561(4)2G5C(1)	CC06CG561(4)	CCR06CG561(4)(1)(7)
620.0	C06(6)G621(4)2G5C(1)	CC06CG621(4)	CCR06CG621(4)(1)(7)
680.0	C06(6)G681(4)2G5C(1)	CC06CG681(4)	CCR06CG681(4)(1)(7)
750.0	C06(6)G751(4)2G5C(1)	CC06CG751(4)	CCR06CG751(4)(1)(7)
820.0	C06(6)G821(4)2G5C(1)	CC06CG821(4)	CCR06CG821(4)(1)(7)
910.0	C06(6)G911(4)2G5C(1)	CC06CG911(4)	CCR06CG911(4)(1)(7)
1,000.0	C06(6)G102(4)2G5C(1)	CC06CG102(4)	CCR06CG102(4)(1)(7)
1,100.0	C06(6)G112(4)2G5C(1)	CC06CG112(4)	CCR06CG112(4)(1)(7)
1,200.0	C06(6)G122(4)2G5C(1)	CC06CG122(4)	CCR06CG122(4)(1)(7)
1,300.0	C06(6)G132(4)2G5C(1)	CC06CG132(4)	CCR06CG132(4)(1)(7)
1,500.0	C06(6)G152(4)2G5C(1)	CC06CG152(4)	CCR06CG152(4)(1)(7)
1,600.0	C06(6)G162(4)2G5C(1)	CC06CG162(4)	CCR06CG162(4)(1)(7)
1,800.0	C06(6)G182(4)2G5C(1)	CC06CG182(4)	CCR06CG182(4)(1)(7)
100 VOLT — C062/C066 SIZE (CC(R)06 PER MIL-PRF-20/36)			
2,000.0	C06(6)G202(4)1G5C(1)	CC06CG202(4)	CCR06CG202(4)(1)(7)
2,200.0	C06(6)G222(4)1G5C(1)	CC06CG222(4)	CCR06CG222(4)(1)(7)
2,400.0	C06(6)G242(4)1G5C(1)	CC06CG242(4)	CCR06CG242(4)(1)(7)
2,700.0	C06(6)G272(4)1G5C(1)	CC06CG272(4)	CCR06CG272(4)(1)(7)
3,000.0	C06(6)G302(4)1G5C(1)	CC06CG302(4)	CCR06CG302(4)(1)(7)
3,300.0	C06(6)G332(4)1G5C(1)	CC06CG332(4)	CCR06CG332(4)(1)(7)
3,600.0	C06(6)G362(4)1G5C(1)	CC06CG362(4)	CCR06CG362(4)(1)(7)
3,900.0	C06(6)G392(4)1G5C(1)	CC06CG392(4)	CCR06CG392(4)(1)(7)
4,300.0	C06(6)G432(4)1G5C(1)	CC06CG432(4)	CCR06CG432(4)(1)(7)
4,700.0	C06(6)G472(4)1G5C(1)	CC06CG472(4)	CCR06CG472(4)(1)(7)
50 VOLT — C062/C066 SIZE (CC(R)06 PER MIL-PRF-20/36)			
5,100.0	C06(6)G512(5)5G5C(1)	CC06CG512(5)	CCR06CG512(5)(1)(7)
5,600.0	C06(6)G562(5)5G5C(1)	CC06CG562(5)	CCR06CG562(5)(1)(7)
6,200.0	C06(6)G622(5)5G5C(1)	CC06CG622(5)	CCR06CG622(5)(1)(7)
6,800.0	C06(6)G682(5)5G5C(1)	CC06CG682(5)	CCR06CG682(5)(1)(7)
7,500.0	C06(6)G752(5)5G5C(1)	CC06CG752(5)	CCR06CG752(5)(1)(7)

To complete Part Number, insert the following letters:
(1) Available Failure Rates: A (CC styles only); M, P, R & S (CCR styles only).
(2) Available Capacitance Tolerances: B, C.
(3) Available Capacitance Tolerances: B, C, D.
(4) Available Capacitance Tolerances: F, G, J.
(5) Available Capacitance Tolerances: F, G, J, K.
(6) Insert "2" for standard design, Style C062G
Insert "6" for stand-off design, Style C066G } Stand-offs are available only as CCR's, not available as CC.
(7) Add "V" for stand-off design, Style C066G
And leave blank for the flat bottom design (C062G)
(8) Available Capacitance Tolerances: G, J, K

CAP. pF	KEMET PART NUMBER	MILITARY STYLE CC	MILITARY STYLE CCR
50 VOLT — C062/C066 SIZE (CC(R)06 PER MIL-PRF-20/36)			
8,200.0	C06(6)G822(5)5G5C(1)	CC06CG822(5)	CCR06CG822(5)(1)(7)
9,100.0	C06(6)G912(5)5G5C(1)	CC06CG912(5)	CCR06CG912(5)(1)(7)
10,000.0	C06(6)G103(5)5G5C(1)	CC06CG103(5)	CCR06CG103(5)(1)(7)
12,000.0	C06(6)G123(5)5G5C(1)	CC06CG123(5)	CCR06CG123(5)(1)(7)
15,000.0	C06(6)G153(5)5G5C(1)	CC06CG153(5)	CCR06CG153(5)(1)(7)
18,000.0	C06(6)G183(5)5G5C(1)	CC06CG183(5)	CCR06CG183(5)(1)(7)
200 VOLT — C512 SIZE (CC(R)07 PER MIL-PRF-20/37)			
2,200.0	C512G222(5)2G5C(1)	CC07CG222(5)	CCR07CG222(5)(1)
2,700.0	C512G272(5)2G5C(1)	CC07CG272(5)	CCR07CG272(5)(1)
3,300.0	C512G332(5)2G5C(1)	CC07CG332(5)	CCR07CG332(5)(1)
3,900.0	C512G392(5)2G5C(1)	CC07CG392(5)	CCR07CG392(5)(1)
4,700.0	C512G472(5)2G5C(1)	CC07CG472(5)	CCR07CG472(5)(1)
100 VOLT — C512 SIZE (CC(R)07 PER MIL-PRF-20/37)			
5,600.0	C512G562(5)1G5C(1)	CC07CG562(5)	CCR07CG562(5)(1)
6,800.0	C512G682(5)1G5C(1)	CC07CG682(5)	CCR07CG682(5)(1)
8,200.0	C512G822(5)1G5C(1)	CC07CG822(5)	CCR07CG822(5)(1)
10,000.0	C512G103(5)1G5C(1)	CC07CG103(5)	CCR07CG103(5)(1)
12,000.0	C512G123(5)1G5C(1)	CC07CG123(5)	CCR07CG123(5)(1)
50 VOLT — C512 SIZE (CC(R)07 PER MIL-PRF-20/37)			
15,000.0	C512G153(5)5G5C(1)	CC07CG153(5)	CCR07CG153(5)(1)
18,000.0	C512G183(5)5G5C(1)	CC07CG183(5)	CCR07CG183(5)(1)
22,000.0	C512G223(5)5G5C(1)	CC07CG223(5)	CCR07CG223(5)(1)
27,000.0	C512G273(5)5G5C(1)	CC07CG273(5)	CCR07CG273(5)(1)
33,000.0	C512G333(5)5G5C(1)	CC07CG333(5)	CCR07CG333(5)(1)
39,000.0	C512G393(5)5G5C(1)	CC07CG393(5)	CCR07CG393(5)(1)
47,000.0	C512G473(5)5G5C(1)	CC07CG473(5)	CCR07CG473(5)(1)
56,000.0	C512G563(5)5G5C(1)	CC07CG563(5)	CCR07CG563(5)(1)
68,000.0	C512G683(5)5G5C(1)	CC07CG683(5)	CCR07CG683(5)(1)
83,000.0	C512G823(5)5G5C(1)	CC07CG823(5)	CCR07CG823(5)(1)
100,000.0	C512G104(5)5G5C(1)	CC07CG104(5)	CCR07CG104(5)(1)
200 VOLT — C522 SIZE (CC(R)08 PER MIL-PRF-20/38)			
3,900.0	C522G392(8)2G5C(1)	CC08CG392(8)	CCR08CG392(8)(1)
4,700.0	C522G472(8)2G5C(1)	CC08CG472(8)	CCR08CG472(8)(1)
100 VOLT — C522 SIZE (CC(R)08 PER MIL-PRF-20/38)			
15,000.0	C522G153(8)1G5C(1)	CC08CG153(8)	CCR08CG153(8)(1)
18,000.0	C522G183(8)1G5C(1)	CC08CG183(8)	CCR08CG183(8)(1)
50 VOLT — C522 SIZE (CC(R)08 PER MIL-PRF-20/38)			
56,000.0	C522G563(8)5G5C(1)	CC08CG563(8)	CCR08CG563(8)(1)
68,000.0	C522G683(8)5G5C(1)	CC08CG683(8)	CCR08CG683(8)(1)

© KEMET Electronics Corporation, P.O. Box 5928, Greenville, S.C. 29606, (864) 963-6300

CAPACITOR OUTLINE DRAWINGS (AXIAL LEADS)

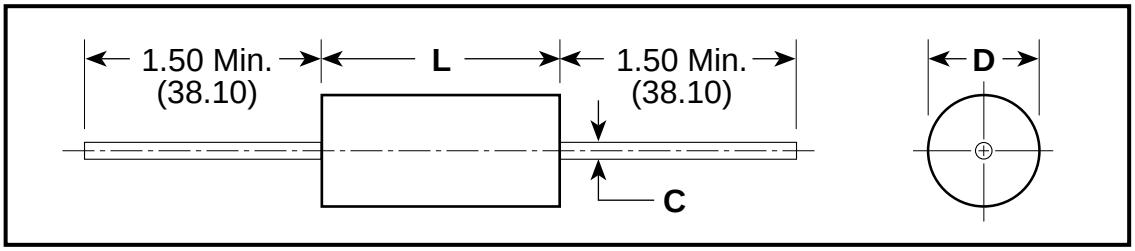

DIMENSIONS — INCHES & (MILLIMETERS)

CASE SIZE	MILITARY EQUIVALENT STYLES	L	D	C
C114	CK12, CKR11	.160 ± .010 (4.06 ± .25)	.090 ± .010 (2.29 ± .25)	.020, +.000, -.003 (.51, +.00, -.08)
C124	CK13, CKR12	.250 ± .010 (6.35 ± .25)	.090 ± .010 (2.29 ± .25)	.020, +.000, -.003 (.51, +.00, -.08)
C192	CK14, CKR14	.390 ± .010 (9.91 ± .25)	.140 ± .010 (3.56 ± .25)	.025, +.002, -.002 (.64, +.05, -.05)
C202	CK15, CKR15	.500 ± .020 (12.70 ± .51)	.250 ± .015 (6.35 ± .38)	.025, +.002, -.002 (.64, +.05, -.05)
C222	CK16, CKR16	.690 ± .030 (17.53 ± .76)	.350 ± .020 (8.89 ± .51)	.025, +.002, -.002 (.64, +.05, -.05)

CAPACITOR OUTLINE DRAWINGS (RADIAL LEADS)

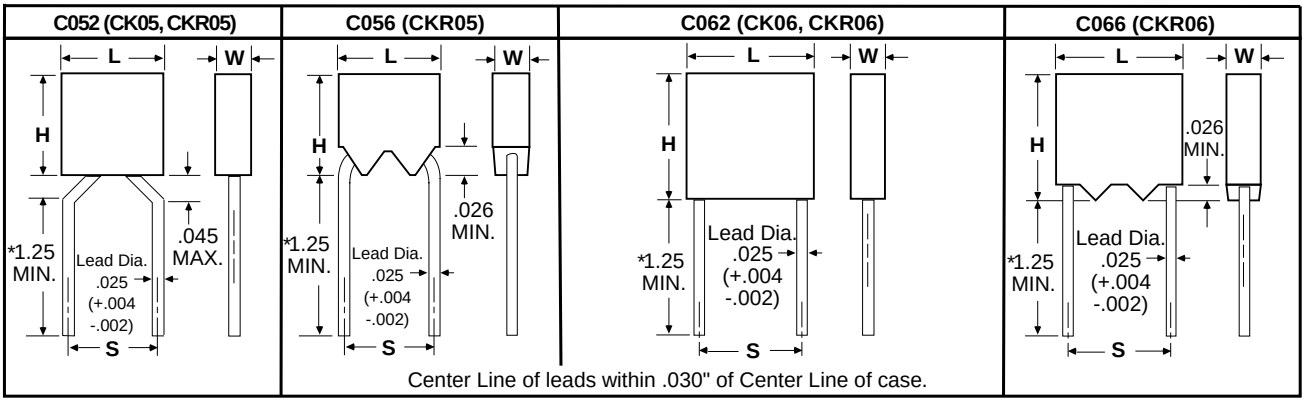

* Leads are .625 minimum when tape and reel packaged.

DIMENSIONS — INCHES & (MILLIMETERS)

CASE SIZE	MILITARY EQUIVALENT STYLES	H HEIGHT	L LENGTH	W WIDTH	S LEAD SPACING
C052/ C056	CK05, CKR05	.190 ± .010 (4.83 ± .25)	.190 ± .010 (4.83 ± .25)	.090 ± .010 (2.29 ± .25)	.200 ± .015 (5.08 ± .38)
C062/ C066	CK06, CKR06	.290 ± .010 (7.37 ± .25)	.290 ± .010 (7.37 ± .25)	.090 ± .010 (2.29 ± .25)	.200 ± .015 (5.08 ± .38)

ORDERING INFORMATION

C 052 K 102 K 2 X 5 C A**

CERAMIC

***CASE SIZE**
(See Table Below)

SPECIFICATION
Military
T — MIL-PRF-39014
K — MIL-C-11015

CAPACITANCE
In picofarad code: First two digits are significant figures and third is number of zeroes following (except 9 indicates division by 10). Examples: 0.1 µF = 100,000 pF = 104 and 9.1 pF = 919. See tables for Standard Values.

CAPACITANCE TOLERANCE
Standard
M — ±20%
K — ±10%

Standard tolerances for each Series are shown in the repetitive parts lists.

WORKING VOLTAGE
1 — 100
2 — 200
5 — 50

FAILURE RATE
A — Not Applicable (Std.)
M — 1.0%
P — 0.1%
R — 0.01%
S — 0.001%

LEAD MATERIAL
C — Standard

INTERNAL CONSTRUCTION
5 — Standard

*CASE SIZES	
RADIAL	AXIAL
C052	C114
C056	C124
C062	C192
C066	C202
	C222

TEMPERATURE CHARACTERISTIC					
			Capacitance Change With Temp.		
KEMET Designator	Military Equivalent	EIA Equivalent	Temp. Range, °C	Measured Without DC Bias Voltage	Measured With Bias (Rated Voltage)
X (Stable)	BX	X7R	-55 to +125	±15%	+15% -25%
R (Stable)	BR	X7R	-55 to +125	±15%	+15% -40%

****Part Number Example: C052K102K2X5CA (14 digits – no spaces)**

MARKING INFORMATION

C114T (CKR11) THROUGH C222T (CKR16) PER MIL-PRF-39014

C114T (CKR11)

JK	J for JAN K for KEMET
103	Capacitance
KP5	Capacitance Tolerance, FR Level & Date Code (Yr.)
37A	Date and Lot Code

C124T (CKR12)

CKR12	Style
2657J	Dash No., J for JAN
0537A	Date & Lot Code
31433	Source Code (Federal Supply Code for Manufacturers, FSCM)

C192T (CKR14) C202T (CKR15) C222T (CKR16)

M39014	Complete Part Number
5-2125	Manufacturer's Name
KEMET	Manufacturer's Name
0537A	Date & Lot Code
J50V	JAN & Voltage
105K	Capacitance, pF Code, Capacitance Tolerance

C052/56T (CKR05) PER MIL-PRF-39014/01

	FRONT	BACK	
Specification	M390	JK	JAN-KEMET
Sheet No.	14/01	0537	Date Code
Four Digit Part No.	1579*	A	Lot Code

*Add "V" as the last digit for stand-off leads.

C062/66T (CKR06) PER MIL-PRF-39014/02

	FRONT	BACK	
Complete MIL Part No.	M39014	0537A	Date & Lot Code
	2-1338	J200V	JAN & Voltage
Manufacturer's Name	*KEMET	103K	Capacitance, pF Code, Capacitance Tolerance

*Add "V" as the last digit for stand-off leads.

C114K (CK12) THROUGH C222K (CK16) PER MIL-C-11015

C114K (CK12) C124K (CK13)

KCK	KEMET, CK
12BX	Style (12 or 13), Temp. Char. (BX or BR)
102K	Capacitance, pF Code, Capacitance Tolerance
0537	Date Code

C192K (CK14) C202K (CK15) C222K (CK16)

K100V	KEMET, Voltage
CK14BX	Style (14, 15 or 16), Temp. Char. (BX or BR)
123K	Capacitance, pF Code, Capacitance Tolerance
0537	Date Code

C052K (CK05) PER MIL-C-11015/18 & C062K (CK06) PER MIL-C-11015/19

	FRONT	BACK	
Style	CK05	200V	Voltage
Temperature Characteristic	BX	K	KEMET
Capacitance, pF Code, Capacitance Tolerance	102K	0501	Date Code

© KEMET Electronics Corporation, P.O. Box 5928, Greenville, S.C. 29606, (864) 963-6300

RATINGS & PART NUMBER REFERENCE

CAP. pF	TOL. %	KEMET PART NUMBER	MIL-C-11015/20	MIL-PRF-39014/05	MIL-PRF-39014/05 For Failure Rate Levels (2)			
					M	P	R	S
100 VOLT — C114 SIZE (MILITARY—CK12 or CKR11)								
10	10	C114(1)100K1X5C(2)	CK12BX100K	CKR11BX100K(2)	2601	2801	2001	2201
10	20	C114(1)100M1X5C(2)	CK12BX100M	CKR11BX100M(2)	2602	2802	2002	2202
12	10	C114(1)120K1X5C(2)	CK12BX120K	CKR11BX120K(2)	2603	2803	2003	2203
15	10	C114(1)150K1X5C(2)	CK12BX150K	CKR11BX150K(2)	2604	2804	2004	2204
15	20	C114(1)150M1X5C(2)	CK12BX150M	CKR11BX150M(2)	2605	2805	2005	2205
18	10	C114(1)180K1X5C(2)	CK12BX180K	CKR11BX180K(2)	2606	2806	2006	2206
22	10	C114(1)220K1X5C(2)	CK12BX220K	CKR11BX220K(2)	2607	2807	2007	2207
22	20	C114(1)220M1X5C(2)	CK12BX220M	CKR11BX220M(2)	2608	2808	2008	2208
27	10	C114(1)270K1X5C(2)	CK12BX270K	CKR11BX270K(2)	2609	2809	2009	2209
33	10	C114(1)330K1X5C(2)	CK12BX330K	CKR11BX330K(2)	2610	2810	2010	2210
33	20	C114(1)330M1X5C(2)	CK12BX330M	CKR11BX330M(2)	2611	2811	2011	2211
39	10	C114(1)390K1X5C(2)	CK12BX390K	CKR11BX390K(2)	2612	2812	2012	2212
47	10	C114(1)470K1X5C(2)	CK12BX470K	CKR11BX470K(2)	2613	2813	2013	2213
47	20	C114(1)470M1X5C(2)	CK12BX470M	CKR11BX470M(2)	2614	2814	2014	2214
56	10	C114(1)560K1X5C(2)	CK12BX560K	CKR11BX560K(2)	2615	2815	2015	2215
68	10	C114(1)680K1X5C(2)	CK12BX680K	CKR11BX680K(2)	2616	2816	2016	2216
68	20	C114(1)680M1X5C(2)	CK12BX680M	CKR11BX680M(2)	2617	2817	2017	2217
82	10	C114(1)820K1X5C(2)	CK12BX820K	CKR11BX820K(2)	2618	2818	2018	2218
100	10	C114(1)101K1X5C(2)	CK12BX101K	CKR11BX101K(2)	2619	2819	2019	2219
100	20	C114(1)101M1X5C(2)	CK12BX101M	CKR11BX101M(2)	2620	2820	2020	2220
120	10	C114(1)121K1X5C(2)	CK12BX121K	CKR11BX121K(2)	2621	2821	2021	2221
150	10	C114(1)151K1X5C(2)	CK12BX151K	CKR11BX151K(2)	2622	2822	2022	2222
150	20	C114(1)151M1X5C(2)	CK12BX151M	CKR11BX151M(2)	2623	2823	2023	2223
180	10	C114(1)181K1X5C(2)	CK12BX181K	CKR11BX181K(2)	2624	2824	2024	2224
220	10	C114(1)221K1X5C(2)	CK12BX221K	CKR11BX221K(2)	2625	2825	2025	2225
220	20	C114(1)221M1X5C(2)	CK12BX221M	CKR11BX221M(2)	2626	2826	2026	2226
270	10	C114(1)271K1X5C(2)	CK12BX271K	CKR11BX271K(2)	2627	2827	2027	2227
330	10	C114(1)331K1X5C(2)	CK12BX331K	CKR11BX331K(2)	2628	2828	2028	2228
330	20	C114(1)331M1X5C(2)	CK12BX331M	CKR11BX331M(2)	2629	2829	2029	2229
390	10	C114(1)391K1X5C(2)	CK12BX391K	CKR11BX391K(2)	2630	2830	2030	2230
470	10	C114(1)471K1X5C(2)	CK12BX471K	CKR11BX471K(2)	2631	2831	2031	2231
470	20	C114(1)471M1X5C(2)	CK12BX471M	CKR11BX471M(2)	2632	2832	2032	2232
560	10	C114(1)561K1X5C(2)	CK12BX561K	CKR11BX561K(2)	2633	2833	2033	2233
680	10	C114(1)681K1X5C(2)	CK12BX681K	CKR11BX681K(2)	2634	2834	2034	2234
680	20	C114(1)681M1X5C(2)	CK12BX681M	CKR11BX681M(2)	2635	2835	2035	2235
820	10	C114(1)821K1X5C(2)	CK12BX821K	CKR11BX821K(2)	2636	2836	2036	2236
1,000	10	C114(1)102K1X5C(2)	CK12BX102K	CKR11BX102K(2)	2637	2837	2037	2237
1,000	20	C114(1)102M1X5C(2)	CK12BX102M	CKR11BX102M(2)	2638	2838	2038	2238
1,200	10	C114(1)122K1X5C(2)	CK12BX122K	CKR11BX122K(2)	2639	2839	2039	2239
1,500	10	C114(1)152K1X5C(2)	CK12BX152K	CKR11BX152K(2)	2640	2840	2040	2240
1,500	20	C114(1)152M1X5C(2)	CK12BX152M	CKR11BX152M(2)	2641	2841	2041	2241
1,800	10	C114(1)182K1X5C(2)	CK12BX182K	CKR11BX182K(2)	2642	2842	2042	2242
2,200	10	C114(1)222K1X5C(2)	CK12BX222K	CKR11BX222K(2)	2643	2843	2043	2243
2,200	20	C114(1)222M1X5C(2)	CK12BX222M	CKR11BX222M(2)	2644	2844	2044	2244
2,700	10	C114(1)272K1X5C(2)	CK12BX272K	CKR11BX272K(2)	2645	2845	2045	2245
3,300	10	C114(1)332K1X5C(2)	CK12BX332K	CKR11BX332K(2)	2646	2846	2046	2246
3,300	20	C114(1)332M1X5C(2)	CK12BX332M	CKR11BX332M2)	2647	2847	2047	2247
3,900	10	C114(1)392K1X5C(2)	CK12BX392K	CKR11BX392K(2)	2648	2848	2048	2248
4,700	10	C114(1)472K1X5C(2)	CK12BX472K	CKR11BX472K(2)	2649	2849	2049	2249
4,700	20	C114(1)472M1X5C(2)	CK12BX472M	CKR11BX472M2)	2650	2850	2050	2250
50 VOLT — C114 SIZE (MILITARY—CK12 or CKR11)								
5,600	10	C114(1)562K5X5C(2)	CK12BX562K	CKR11BX562K(2)	2651	2851	2051	2251
6,800	10	C114(1)682K5X5C(2)	CK12BX682K	CKR11BX682K(2)	2652	2852	2052	2252
6,800	20	C114(1)682M5X5C(2)	CK12BX682M	CKR11BX682M(2)	2653	2853	2053	2253
8,200	10	C114(1)822K5X5C(2)	CK12BX822K	CKR11BX822K(2)	2654	2854	2054	2254
10,000	10	C114(1)103K5X5C(2)	CK12BX103K	CKR11BX103K(2)	2655	2855	2055	2255
10,000	20	C114(1)103M5X5C(2)	CK12BX103M	CKR11BX103M(2)	2656	2856	2056	2256
100 VOLT — C124 SIZE (MILITARY—CK13 or CKR12)								
5,600	10	C124(1)562K1X5C(2)	CK13BX562K	CKR12BX562K(2)	2657	2857	2057	2257
6,800	10	C124(1)682K1X5C(2)	CK13BX682K	CKR12BX682K(2)	2658	2858	2058	2258
6,800	20	C124(1)682M1X5C(2)	CK13BX682M	CKR12BX682M(2)	2659	2859	2059	2259
8,200	10	C124(1)822K1X5C(2)	CK13BX822K	CKR12BX822K(2)	2660	2860	2060	2260
10,000	10	C124(1)103K1X5C(2)	CK13BX103K	CKR12BX103K(2)	2661	2861	2061	2261
10,000	20	C124(1)103M1X5C(2)	CK13BX103M	CKR12BX103M(2)	2662	2862	2062	2262
50 VOLT — C124 SIZE (MILITARY—CK13 or CKR12)								
12,000	10	C124(1)123K5X5C(2)	CK13BX123K	CKR12BX123K(2)	2663	2863	2063	2263
15,000	10	C124(1)153K5X5C(2)	CK13BX153K	CKR12BX153K(2)	2664	2864	2064	2264
15,000	20	C124(1)153M5X5C(2)	CK13BX153M	CKR12BX153M(2)	2665	2865	2065	2265
18,000	10	C124(1)183K5X5C(2)	CK13BX183K	CKR12BX183K(2)	2666	2866	2066	2266
22,000	10	C124(1)223K5X5C(2)	CK13BX223K	CKR12BX223K(2)	2667	2867	2067	2267
22,000	20	C124(1)223M5X5C(2)	CK13BX223M	CKR12BX223M(2)	2668	2868	2068	2268
27,000	10	C124K273K5R5CA	CK13BR273K					
33,000	10	C124K333K5R5CA	CK13BR333K					
33,000	20	C124K333M5R5CA	CK13BR333M					
39,000	10	C124K393K5R5CA	CK13BR393K					
47,000	10	C124K473K5R5CA	CK13BR473K					
47,000	20	C124K473M5R5CA	CK13BR473M					

(1) Insert proper letter for specification: K — MIL-C-11015; T — MIL-PRF-39014 (2) Failure Rate Designator: A — Not applicable (MIL-C-11015); M — 1%/1000 Hours, P — .1%/1000 Hours, R — .01%/1000 Hours, S — .001%/1000 Hours (MIL-PRF-39014)

RATINGS & PART NUMBER REFERENCE

CAP. pF	TOL. %	KEMET PART NUMBER	MIL-C-11015/20	MIL-PRF-39014/05	MIL-PRF-39014/05 For Failure Rate Levels (2)			
					M	P	R	S
50 VOLT — C124 SIZE (MILITARY—CK13 or CKR12) (Cont'd)								
27,000	10	C124T273K5X5C(2)		CKR12BX273K(2)	2669	2869	2069	2269
33,000	10	C124T333K5X5C(2)		CKR12BX333K(2)	2670	2870	2070	2270
33,000	20	C124T333M5X5C(2)		CKR12BX333M(2)	2671	2871	2071	2271
39,000	10	C124T393K5X5C(2)		CKR12BX393K(2)	2672	2872	2072	2272
47,000	10	C124T473K5X5C(2)		CKR12BX473K(2)	2673	2873	2073	2273
47,000	20	C124T473M5X5C(2)		CKR12BX473M(2)	2674	2874	2074	2274
100 VOLT — C192 SIZE (MILITARY—CK14 or CKR14)								
12,000	10	C192(1)123K1X5C(2)	CK14BX123K	CKR14BX123K(2)	2675	2875	2075	2275
15,000	10	C192(1)153K1X5C(2)	CK14BX153K	CKR14BX153K(2)	2676	2876	2076	2276
15,000	20	C192(1)153M1X5C(2)	CK14BX153M	CKR14BX153M(2)	2677	2877	2077	2277
18,000	10	C192(1)183K1X5C(2)	CK14BX183K	CKR14BX183K(2)	2678	2878	2078	2278
22,000	10	C192(1)223K1X5C(2)	CK14BX223K	CKR14BX223K(2)	2679	2879	2079	2279
22,000	20	C192(1)223M1X5C(2)	CK14BX223M	CKR14BX223M(2)	2680	2880	2080	2280
27,000	10	C192(1)273K1X5C(2)	CK14BX273K	CKR14BX273K(2)	2681	2881	2081	2281
33,000	10	C192(1)333K1X5C(2)	CK14BX333K	CKR14BX333K(2)	2682	2882	2082	2282
33,000	20	C192(1)333M1X5C(2)	CK14BX333M	CKR14BX333M(2)	2683	2883	2083	2283
39,000	10	C192(1)393K1X5C(2)	CK14BX393K	CKR14BX393K(2)	2684	2884	2084	2284
47,000	10	C192(1)473K1X5C(2)	CK14BX473K	CKR14BX473K(2)	2685	2885	2085	2285
47,000	20	C192(1)473M1X5C(2)	CK14BX473M	CKR14BX473M(2)	2686	2886	2086	2286
56,000	10	C192(1)563K1R5C(2)	CK14BR563K	CKR14BR563K(2)	2693	2893	2093	2293
68,000	10	C192(1)683K1R5C(2)	CK14BR683K	CKR14BR683K(2)	2694	2894	2094	2294
68,000	20	C192(1)683M1R5C(2)	CK14BR683M	CKR14BR683M(2)	2695	2895	2095	2295
82,000	10	C192(1)823K1R5C(2)	CK14BR823K	CKR14BR823K(2)	2696	2896	2096	2296
100,000	10	C192(1)104K1R5C(2)	CK14BR104K	CKR14BR104K(2)	2697	2897	2097	2297
100,000	20	C192(1)104M1R5C(2)	CK14BR104M	CKR14BR104M(2)	2698	2898	2098	2298
50 VOLT — C192 SIZE (MILITARY—CK14 or CKR14)								
56,000	10	C192T563K5X5C(2)		CKR14BX563K(2)	2687	2887	2087	2287
68,000	10	C192T683K5X5C(2)		CKR14BX683K(2)	2688	2888	2088	2288
68,000	20	C192T683M5X5C(2)		CKR14BX683M(2)	2689	2889	2089	2289
82,000	10	C192T823K5X5C(2)		CKR14BX823K(2)	2690	2890	2090	2290
100,000	10	C192T104K5X5C(2)		CKR14BX104K(2)	2691	2891	2091	2291
100,000	20	C192T104M5X5C(2)		CKR14BX104M(2)	2692	2892	2092	2292
120,000	10	C192(1)124K5R5C(2)	CK14BR124K	CKR14BR124K(2)	2699	2899	2099	2299
150,000	10	C192(1)154K5R5C(2)	CK14BR154K	CKR14BR154K(2)	2700	2900	2100	2300
150,000	20	C192(1)154M5R5C(2)	CK14BR154M	CKR14BR154M(2)	2701	2901	2101	2301
180,000	10	C192(1)184K5R5C(2)	CK14BR184K	CKR14BR184K(2)	2702	2902	2102	2302
220,000	10	C192(1)224K5R5C(2)	CK14BR224K	CKR14BR224K(2)	2703	2903	2103	2303
220,000	20	C192(1)224M5R5C(2)	CK14BR224M	CKR14BR224M(2)	2704	2904	2104	2304
270,000	10	C192(1)274K5R5C(2)	CK14BR274K	CKR14BR274K(2)	2705	2905	2105	2305
100 VOLT — C202 SIZE (MILITARY—CK15 or CKR15)								
56,000	10	C202T563K1X5C(2)		CKR15BX563K(2)	2706	2906	2106	2306
68,000	10	C202T683K1X5C(2)		CKR15BX683K(2)	2707	2907	2107	2307
68,000	20	C202T683M1X5C(2)		CKR15BX683M(2)	2708	2908	2108	2308
82,000	10	C202T823K1X5C(2)		CKR15BX823K(2)	2709	2909	2109	2309
100,000	10	C202(1)104K1X5C(2)	CK15BX104K	CKR15BX104K(2)	2710	2910	2110	2310
100,000	20	C202(1)104M1X5C(2)	CK15BX104M	CKR15BX104M(2)	2711	2911	2111	2311
120,000	10	C202(1)124K1R5C(2)	CK15BR124K	CKR15BR124K(2)	2712	2912	2112	2312
150,000	10	C202(1)154K1R5C(2)	CK15BR154K	CKR15BR154K(2)	2713	2913	2113	2313
150,000	20	C202(1)154M1R5C(2)	CK15BR154M	CKR15BR154M(2)	2714	2914	2114	2314
180,000	10	C202(1)184K1R5C(2)	CK15BR184K	CKR15BR184K(2)	2715	2915	2115	2315
220,000	10	C202(1)224K1R5C(2)	CK15BR224K	CKR15BR224K(2)	2716	2916	2116	2316
220,000	20	C202(1)224M1R5C(2)	CK15BR224M	CKR15BR224M(2)	2717	2917	2117	2317
270,000	10	C202(1)274K1R5C(2)	CK15BR274K	CKR15BR274K(2)	2718	2918	2118	2318
330,000	10	C202(1)334K1R5C(2)	CK15BR334K	CKR15BR334K(2)	2719	2919	2119	2319
330,000	20	C202(1)334M1R5C(2)	CK15BR334M	CKR15BR334M(2)	2720	2920	2120	2320
50 VOLT — C202 SIZE (MILITARY—CK15 or CKR15)								
470,000	10	C202(1)474K5R5C(2)	CK15BR474K	CKR15BR474K(2)	2721	2921	2121	2321
470,000	20	C202(1)474M5R5C(2)	CK15BR474M	CKR15BR474M(2)	2722	2922	2122	2322
680,000	10	C202T684K5R5C(2)		CKR15BR684K(2)	2723	2923	2123	2323
680,000	20	C202T684M5R5C(2)		CKR15BR684M(2)	2724	2924	2124	2324
1,000,000	10	C202(1)105K5R5C(2)	CK15BR105K	CKR15BR105K(2)	2725	2925	2125	2325
1,000,000	20	C202(1)105M5R5C(2)	CK15BR105M	CKR15BR105M(2)	2726	2926	2126	2326
100 VOLT — C222 SIZE (MILITARY—CK16 or CKR16)								
470,000	10	C222(1)474K1R5C(2)	CK16BR474K	CKR16BR474K(2)	2727	2927	2127	2327
470,000	20	C222(1)474M1R5C(2)	CK16BR474M	CKR16BR474M(2)	2728	2928	2128	2328
680,000	10	C222T684K1R5C(2)		CKR16BR684K(2)	2729	2929	2129	2329
680,000	20	C222T684M1R5C(2)		CKR16BR684M(2)	2730	2930	2130	2330
1,000,000	10	C222(1)105K1R5C(2)	CK16BR105K	CKR16BR105K(2)	2731	2931	2131	2331
1,000,000	20	C222(1)105M1R5C(2)	CK16BR105M	CKR16BR105M(2)	2732	2932	2132	2332
50 VOLT — C222 SIZE (MILITARY—CK16 or CKR16)								
2,200,000	10	C222(1)225K5R5C(2)	CK16BR225K	CKR16BR225K(2)	2733	2933	2133	2333
2,200,000	20	C222(1)225M5R5C(2)	CK16BR225M	CKR16BR225M(2)	2734	2934	2134	2334
3,300,000	10	C222(1)335K5R5C(2)	CK16BR335M	CKR16BR335K(2)	2735	2935	2135	2335
3,300,000	20	C222(1)335M5R5C(2)	CK16BR335M	CKR16BR335M(2)	2736	2936	2136	2336

(1) Insert proper letter for specification: K — MIL-C-11015; T — MIL-PRF-39014 (2) Failure Rate Designator: A — Not applicable (MIL-C-11015); M — 1%/1000 Hours, P — .1%/1000 Hours, R — .01%/1000 Hours, S — .001%/1000 Hours (MIL-PRF-39014)

© KEMET Electronics Corporation, P.O. Box 5928, Greenville, S.C. 29606, (864) 963-6300

RATINGS & PART NUMBER REFERENCE

CAP. pF	TOL. %	KEMET PART NUMBER	MIL-C-11015/18	MIL-PRF-39014/01	MIL-PRF-39014/01 For Failure Rate Levels (2)			
					M	P	R	S
200 VOLT — C052/C056 SIZE (MILITARY—CK05 or CKR05)								
10	10	C05(4)(1)100K2X5C(2)	CK05BX100K	CKR05BX100K(2)(3)	1201(3)	1241(3)	1281(3)	1321(3)
10	20	C05(4)(1)100M2X5C(2)	CK05BX100M	CKR05BX100M(2)(3)	1202(3)	1242(3)	1282(3)	1322(3)
12	10	C05(4)(1)120K2X5C(2)	CK05BX120K	CKR05BX120K(2)(3)	1203(3)	1243(3)	1283(3)	1323(3)
15	10	C05(4)(1)150K2X5C(2)	CK05BX150K	CKR05BX150K(2)(3)	1204(3)	1244(3)	1284(3)	1324(3)
15	20	C05(4)(1)150M2X5C(2)	CK05BX150M	CKR05BX150M(2)(3)	1205(3)	1245(3)	1285(3)	1325(3)
18	10	C05(4)(1)180K2X5C(2)	CK05BX180K	CKR05BX180K(2)(3)	1206(3)	1246(3)	1286(3)	1326(3)
22	10	C05(4)(1)220K2X5C(2)	CK05BX220K	CKR05BX220K(2)(3)	1207(3)	1247(3)	1287(3)	1327(3)
22	20	C05(4)(1)220M2X5C(2)	CK05BX220M	CKR05BX220M(2)(3)	1208(3)	1248(3)	1288(3)	1328(3)
27	10	C05(4)(1)270K2X5C(2)	CK05BX270K	CKR05BX270K(2)(3)	1209(3)	1249(3)	1289(3)	1329(3)
33	10	C05(4)(1)330K2X5C(2)	CK05BX330K	CKR05BX330K(2)(3)	1210(3)	1250(3)	1290(3)	1330(3)
33	20	C05(4)(1)330M2X5C(2)	CK05BX330M	CKR05BX330M(2)(3)	1211(3)	1251(3)	1291(3)	1331(3)
39	10	C05(4)(1)390K2X5C(2)	CK05BX390K	CKR05BX390K(2)(3)	1212(3)	1252(3)	1292(3)	1332(3)
47	10	C05(4)(1)470K2X5C(2)	CK05BX470K	CKR05BX470K(2)(3)	1213(3)	1253(3)	1293(3)	1333(3)
47	20	C05(4)(1)470M2X5C(2)	CK05BX470M	CKR05BX470M(2)(3)	1214(3)	1254(3)	1294(3)	1334(3)
56	10	C05(4)(1)560K2X5C(2)	CK05BX560K	CKR05BX560K(2)(3)	1215(3)	1255(3)	1295(3)	1335(3)
68	10	C05(4)(1)680K2X5C(2)	CK05BX680K	CKR05BX680K(2)(3)	1216(3)	1256(3)	1296(3)	1336(3)
68	20	C05(4)(1)680M2X5C(2)	CK05BX680M	CKR05BX680M(2)(3)	1217(3)	1257(3)	1297(3)	1337(3)
82	10	C05(4)(1)820K2X5C(2)	CK05BX820K	CKR05BX820K(2)(3)	1218(3)	1258(3)	1298(3)	1338(3)
100	10	C05(4)(1)101K2X5C(2)	CK05BX101K	CKR05BX101K(2)(3)	1219(3)	1259(3)	1299(3)	1339(3)
100	20	C05(4)(1)101M2X5C(2)	CK05BX101M	CKR05BX101M(2)(3)	1220(3)	1260(3)	1300(3)	1340(3)
120	10	C05(4)(1)121K2X5C(2)	CK05BX121K	CKR05BX121K(2)(3)	1221(3)	1261(3)	1301(3)	1341(3)
150	10	C05(4)(1)151K2X5C(2)	CK05BX151K	CKR05BX151K(2)(3)	1222(3)	1262(3)	1302(3)	1342(3)
150	20	C05(4)(1)151M2X5C(2)	CK05BX151M	CKR05BX151M(2)(3)	1223(3)	1263(3)	1303(3)	1343(3)
180	10	C05(4)(1)181K2X5C(2)	CK05BX181K	CKR05BX181K(2)(3)	1224(3)	1264(3)	1304(3)	1344(3)
220	10	C05(4)(1)221K2X5C(2)	CK05BX221K	CKR05BX221K(2)(3)	1225(3)	1265(3)	1305(3)	1345(3)
220	20	C05(4)(1)221M2X5C(2)	CK05BX221M	CKR05BX221M(2)(3)	1226(3)	1266(3)	1306(3)	1346(3)
270	10	C05(4)(1)271K2X5C(2)	CK05BX271K	CKR05BX271K(2)(3)	1227(3)	1267(3)	1307(3)	1347(3)
330	10	C05(4)(1)331K2X5C(2)	CK05BX331K	CKR05BX331K(2)(3)	1228(3)	1268(3)	1308(3)	1348(3)
330	20	C05(4)(1)331M2X5C(2)	CK05BX331M	CKR05BX331M(2)(3)	1229(3)	1269(3)	1309(3)	1349(3)
390	10	C05(4)(1)391K2X5C(2)	CK05BX391K	CKR05BX391K(2)(3)	1230(3)	1270(3)	1310(3)	1350(3)
470	10	C05(4)(1)471K2X5C(2)	CK05BX471K	CKR05BX471K(2)(3)	1231(3)	1271(3)	1311(3)	1351(3)
470	20	C05(4)(1)471M2X5C(2)	CK05BX471M	CKR05BX471M(2)(3)	1232(3)	1272(3)	1312(3)	1352(3)
560	10	C05(4)(1)561K2X5C(2)	CK05BX561K	CKR05BX561K(2)(3)	1233(3)	1273(3)	1313(3)	1353(3)
680	10	C05(4)(1)681K2X5C(2)	CK05BX681K	CKR05BX681K(2)(3)	1234(3)	1274(3)	1314(3)	1354(3)
680	20	C05(4)(1)681M2X5C(2)	CK05BX681M	CKR05BX681M(2)(3)	1235(3)	1275(3)	1315(3)	1355(3)
820	10	C05(4)(1)821K2X5C(2)	CK05BX821K	CKR05BX821K(2)(3)	1236(3)	1276(3)	1316(3)	1356(3)
1,000	10	C05(4)(1)102K2X5C(2)	CK05BX102K	CKR05BX102K(2)(3)	1237(3)	1277(3)	1317(3)	1357(3)
1,000	20	C05(4)(1)102M2X5C(2)	CK05BX102M	CKR05BX102M(2)(3)	1238(3)	1278(3)	1318(3)	1358(3)
100 VOLT — C052/C056 SIZE (MILITARY—CK05 or CKR05)								
1,200	10	C05(4)(1)122K1X5C(2)	CK05BX122K	CKR05BX122K(2)(3)	1239(3)	1279(3)	1319(3)	1359(3)
1,500	10	C05(4)(1)152K1X5C(2)	CK05BX152K	CKR05BX152K(2)(3)	1240(3)	1280(3)	1320(3)	1360(3)
1,500	20	C05(4)(1)152M1X5C(2)	CK05BX152M	CKR05BX152M(2)(3)	1441(3)	1481(3)	1521(3)	1561(3)
1,800	10	C05(4)(1)182K1X5C(2)	CK05BX182K	CKR05BX182K(2)(3)	1442(3)	1482(3)	1522(3)	1562(3)
2,200	10	C05(4)(1)222K1X5C(2)	CK05BX222K	CKR05BX222K(2)(3)	1443(3)	1483(3)	1523(3)	1563(3)
2,200	20	C05(4)(1)222M1X5C(2)	CK05BX222M	CKR05BX222M(2)(3)	1444(3)	1484(3)	1524(3)	1564(3)
2,700	10	C05(4)(1)272K1X5C(2)	CK05BX272K	CKR05BX272K(2)(3)	1445(3)	1485(3)	1525(3)	1565(3)
3,300	10	C05(4)(1)332K1X5C(2)	CK05BX332K	CKR05BX332K(2)(3)	1446(3)	1486(3)	1526(3)	1566(3)
3,300	20	C05(4)(1)332M1X5C(2)	CK05BX332M	CKR05BX332M(2)(3)	1447(3)	1487(3)	1527(3)	1567(3)
3,900	10	C05(4)(1)392K1X5C(2)	CK05BX392K	CKR05BX392K(2)(3)	1448(3)	1488(3)	1528(3)	1568(3)
4,700	10	C05(4)(1)472K1X5C(2)	CK05BX472K	CKR05BX472K(2)(3)	1449(3)	1489(3)	1529(3)	1569(3)
4,700	20	C05(4)(1)472M1X5C(2)	CK05BX472M	CKR05BX472M(2)(3)	1450(3)	1490(3)	1530(3)	1570(3)
5,600	10	C05(4)(1)562K1X5C(2)	CK05BX562K	CKR05BX562K(2)(3)	1451(3)	1491(3)	1531(3)	1571(3)
6,800	10	C05(4)(1)682K1X5C(2)	CK05BX682K	CKR05BX682K(2)(3)	1452(3)	1492(3)	1532(3)	1572(3)
6,800	20	C05(4)(1)682M1X5C(2)	CK05BX682M	CKR05BX682M(2)(3)	1453(3)	1493(3)	1533(3)	1573(3)
8,200	10	C05(4)(1)822K1X5C(2)	CK05BX822K	CKR05BX822K(2)(3)	1454(3)	1494(3)	1534(3)	1574(3)
10,000	10	C05(4)(1)103K1X5C(2)	CK05BX103K	CKR05BX103K(2)(3)	1455(3)	1495(3)	1535(3)	1575(3)
10,000	20	C05(4)(1)103M1X5C(2)	CK05BX103M	CKR05BX103M(2)(3)	1456(3)	1496(3)	1536(3)	1576(3)
50 VOLT — C052/C056 SIZE (MILITARY—CK05 or CKR05)								
12,000	10	C05(4)(1)123K5X5C(2)	CK05BX123K	CKR05BX123K(2)(3)	1457(3)	1497(3)	1537(3)	1577(3)
15,000	10	C05(4)(1)153K5X5C(2)	CK05BX153K	CKR05BX153K(2)(3)	1458(3)	1498(3)	1538(3)	1578(3)
15,000	20	C05(4)(1)153M5X5C(2)	CK05BX153M	CKR05BX153M(2)(3)	1459(3)	1499(3)	1539(3)	1579(3)
18,000	10	C05(4)(1)183K5X5C(2)	CK05BX183K	CKR05BX183K(2)(3)	1460(3)	1500(3)	1540(3)	1580(3)
22,000	10	C05(4)(1)223K5X5C(2)	CK05BX223K	CKR05BX223K(2)(3)	1461(3)	1501(3)	1541(3)	1581(3)
22,000	20	C05(4)(1)223M5X5C(2)	CK05BX223M	CKR05BX223M(2)(3)	1462(3)	1502(3)	1542(3)	1582(3)
27,000	10	C05(4)(1)273K5X5C(2)	CK05BX273K	CKR05BX273K(2)(3)	1463(3)	1503(3)	1543(3)	1583(3)
33,000	10	C05(4)(1)333K5X5C(2)	CK05BX333K	CKR05BX333K(2)(3)	1464(3)	1504(3)	1544(3)	1584(3)
33,000	20	C05(4)(1)333M5X5C(2)	CK05BX333M	CKR05BX333M(2)(3)	1465(3)	1505(3)	1545(3)	1585(3)
39,000	10	C05(4)(1)393K5X5C(2)	CK05BX393K	CKR05BX393K(2)(3)	1466(3)	1506(3)	1546(3)	1586(3)
47,000	10	C05(4)(1)473K5X5C(2)	CK05BX473K	CKR05BX473K(2)(3)	1467(3)	1507(3)	1547(3)	1587(3)
47,000	20	C05(4)(1)473M5X5C(2)	CK05BX473M	CKR05BX473M(2)(3)	1468(3)	1508(3)	1548(3)	1588(3)
56,000	10	C05(4)(1)563K5X5C(2)	CK05BX563K	CKR05BX563K(2)(3)	1469(3)	1509(3)	1549(3)	1589(3)
68,000	10	C05(4)(1)683K5X5C(2)	CK05BX683K	CKR05BX683K(2)(3)	1470(3)	1510(3)	1550(3)	1590(3)
68,000	20	C05(4)(1)683M5X5C(2)	CK05BX683M	CKR05BX683M(2)(3)	1471(3)	1511(3)	1551(3)	1591(3)
82,000	10	C05(4)(1)823K5X5C(2)	CK05BX823K	CKR05BX823K(2)(3)	1472(3)	1512(3)	1552(3)	1592(3)
100,000	10	C05(4)(1)104K5X5C(2)	CK05BX104K	CKR05BX104K(2)(3)	1473(3)	1513(3)	1553(3)	1593(3)
100,000	20	C05(4)(1)104M5X5C(2)	CK05BX104M	CKR05BX104M(2)(3)	1474(3)	1514(3)	1554(3)	1594(3)

(1) Insert proper letter for specification: K — MIL-C-11015; T — MIL-PRF-39014 (2) Failure Rate Designator: A — Not applicable (MIL-C-11015); M — 1%/1000 Hours, P — .1%/1000 Hours, R — .01%/1000 Hours, S — .001%/1000 Hours (MIL-PRF-39014)
(3) Insert "V" for standard design (C056). Leave blank for the flat bottom design (C052).
(4) Insert "2" for standard design (Style C052) } Note: Stand-offs are available only
Insert "6" for stand-off design (Style C056) } with the CKR, not the CK.

RATINGS & PART NUMBER REFERENCE

CAP. pF	TOL. %	KEMET PART NUMBER	MIL-C-11015/19	MIL-PRF-39014/02	MIL-PRF-39014/02 For Failure Rate Levels (2)			
					M	P	R	S
200 VOLT — C062/C066 SIZE (MILITARY—CK06 or CKR06)								
1,200	10	C06(4)(1)122K2X5C(2)	CK06BX122K	CKR06BX122K(2)(3)	1201(3)	1241(3)	1281(3)	1321(3)
1,500	10	C06(4)(1)152K2X5C(2)	CK06BX152K	CKR06BX152K(2)(3)	1202(3)	1242(3)	1282(3)	1322(3)
1,500	20	C06(4)(1)152M2X5C(2)	CK06BX152M	CKR06BX152M(2)(3)	1203(3)	1243(3)	1283(3)	1323(3)
1,800	10	C06(4)(1)182K2X5C(2)	CK06BX182K	CKR06BX182K(2)(3)	1204(3)	1244(3)	1284(3)	1324(3)
2,200	10	C06(4)(1)222K2X5C(2)	CK06BX222K	CKR06BX222K(2)(3)	1206(3)	1246(3)	1286(3)	1326(3)
2,200	20	C06(4)(1)222M2X5C(2)	CK06BX222M	CKR06BX222M(2)(3)	1207(3)	1247(3)	1287(3)	1327(3)
2,700	10	C06(4)(1)272K2X5C(2)	CK06BX272K	CKR06BX272K(2)(3)	1208(3)	1248(3)	1288(3)	1328(3)
3,300	10	C06(4)(1)332K2X5C(2)	CK06BX332K	CKR06BX332K(2)(3)	1209(3)	1249(3)	1289(3)	1329(3)
3,300	20	C06(4)(1)332M2X5C(2)	CK06BX332M	CKR06BX332M(2)(3)	1210(3)	1250(3)	1290(3)	1330(3)
3,900	10	C06(4)(1)392K2X5C(2)	CK06BX392K	CKR06BX392K(2)(3)	1211(3)	1251(3)	1291(3)	1331(3)
4,700	10	C06(4)(1)472K2X5C(2)	CK06BX472K	CKR06BX472K(2)(3)	1212(3)	1252(3)	1292(3)	1332(3)
4,700	20	C06(4)(1)472M2X5C(2)	CK06BX472M	CKR06BX472M(2)(3)	1213(3)	1253(3)	1293(3)	1333(3)
5,600	10	C06(4)(1)562K2X5C(2)	CK06BX562K	CKR06BX562K(2)(3)	1214(3)	1254(3)	1294(3)	1334(3)
6,800	10	C06(4)(1)682K2X5C(2)	CK06BX682K	CKR06BX682K(2)(3)	1215(3)	1255(3)	1295(3)	1335(3)
6,800	20	C06(4)(1)682M2X5C(2)	CK06BX682M	CKR06BX682M(2)(3)	1216(3)	1256(3)	1296(3)	1336(3)
8,200	10	C06(4)(1)822K2X5C(2)	CK06BX822K	CKR06BX822K(2)(3)	1217(3)	1257(3)	1297(3)	1337(3)
10,000	10	C06(4)(1)103K2X5C(2)	CK06BX103K	CKR06BX103K(2)(3)	1218(3)	1258(3)	1298(3)	1338(3)
10,000	20	C06(4)(1)103M2X5C(2)	CK06BX103M	CKR06BX103M(2)(3)	1219(3)	1259(3)	1299(3)	1339(3)
100 VOLT — C062/C066 SIZE (MILITARY—CK06 or CKR06)								
12,000	10	C06(4)(1)123K1X5C(2)	CK06BX123K	CKR06BX123K(2)(3)	1231(3)	1271(3)	1311(3)	1351(3)
15,000	10	C06(4)(1)153K1X5C(2)	CK06BX153K	CKR06BX153K(2)(3)	1220(3)	1260(3)	1300(3)	1340(3)
15,000	20	C062K153M1X5CA	CK06BX153M					
18,000	10	C06(4)(1)183K1X5C(2)	CK06BX183K	CKR06BX183K(2)(3)	1221(3)	1261(3)	1301(3)	1341(3)
22,000	10	C06(4)(1)223K1X5C(2)	CK06BX223K	CKR06BX223K(2)(3)	1222(3)	1262(3)	1302(3)	1342(3)
22,000	20	C062K223M1X5CA	CK06BX223M					
27,000	10	C06(4)(1)273K1X5C(2)	CK06BX273K	CKR06BX273K(2)(3)	1232(3)	1272(3)	1312(3)	1352(3)
33,000	10	C06(4)(1)333K1X5C(2)	CK06BX333K	CKR06BX333K(2)(3)	1223(3)	1263(3)	1303(3)	1343(3)
33,000	20	C062K333M1X5CA	CK06BX333M					
39,000	10	C06(4)(1)393K1X5C(2)	CK06BX393K	CKR06BX393K(2)(3)	1224(3)	1264(3)	1304(3)	1344(3)
47,000	10	C06(4)(1)473K1X5C(2)	CK06BX473K	CKR06BX473K(2)(3)	1225(3)	1265(3)	1305(3)	1345(3)
47,000	20	C062K473M1X5CA	CK06BX473M					
56,000	10	C06(4)(1)563K1X5C(2)	CK06BX563K	CKR06BX563K(2)(3)	1226(3)	1266(3)	1306(3)	1346(3)
68,000	10	C06(4)(1)683K1X5C(2)	CK06BX683K	CKR06BX683K(2)(3)	1227(3)	1267(3)	1307(3)	1347(3)
68,000	20	C062K683M1X5CA	CK06BX683M					
82,000	10	C06(4)(1)823K1X5C(2)	CK06BX823K	CKR06BX823K(2)(3)	1229(3)	1269(3)	1309(3)	1349(3)
100,000	10	C06(4)(1)104K1X5C(2)	CK06BX104K	CKR06BX104K(2)(3)	1230(3)	1270(3)	1310(3)	1350(3)
100,000	20	C062K104M1X5CA	CK06BX104M					
50 VOLT — C062/C066 SIZE (MILITARY—CK06 or CKR06)								
120,000	10	C06(4)(1)124K5X5C(2)	CK06BX124K	CKR06BX124K(2)(3)	1233(3)	1273(3)	1313(3)	1353(3)
150,000	10	C06(4)(1)154K5X5C(2)	CK06BX154K	CKR06BX154K(2)(3)	1234(3)	1274(3)	1314(3)	1354(3)
150,000	20	C062K154M5X5CA	CK06BX154M					
180,000	10	C06(4)(1)184K5X5C(2)	CK06BX184K	CKR06BX184K(2)(3)	1235(3)	1275(3)	1315(3)	1355(3)
220,000	10	C06(4)(1)224K5X5C(2)	CK06BX224K	CKR06BX224K(2)(3)	1236(3)	1276(3)	1316(3)	1356(3)
220,000	20	C062K224M5X5CA	CK06BX224M					
270,000	10	C06(4)(1)274K5X5C(2)	CK06BX274K	CKR06BX274K(2)(3)	1237(3)	1277(3)	1317(3)	1357(3)
330,000	10	C06(4)(1)334K5X5C(2)	CK06BX334K	CKR06BX334K(2)(3)	1238(3)	1278(3)	1318(3)	1358(3)
330,000	20	C062K334M5X5CA	CK06BX334M					
390,000	10	C06(4)(1)394K5X5C(2)	CK06BX394K	CKR06BX394K(2)(3)	1239(3)	1279(3)	1319(3)	1359(3)
470,000	10	C06(4)(1)474K5X5C(2)	CK06BX474K	CKR06BX474K(2)(3)	1240(3)	1280(3)	1320(3)	1360(3)
470,000	20	C062K474M5X5CA	CK06BX474M					
560,000	10	C06(4)(1)564K5X5C(2)	CK06BX564K	CKR06BX564K(2)(3)	1404(3)	1408(3)	1412(3)	1416(3)
680,000	10	C06(4)(1)684K5X5C(2)	CK06BX684K	CKR06BX684K(2)(3)	1405(3)	1409(3)	1413(3)	1417(3)
680,000	20	C062K684M5X5CA	CK06BX684M					
820,000	10	C06(4)(1)824K5X5C(2)	CK06BX824K	CKR06BX824K(2)(3)	1406(3)	1410(3)	1414(3)	1418(3)
1,000,000	10	C06(4)(1)105K5X5C(2)	CK06BX105K	CKR06BX105K(2)(3)	1407(3)	1411(3)	1415(3)	1419(3)
1,000,000	20	C062K105M5X5CA	CK06BX105M					

(1) Insert proper letter for specification: K — MIL-C-11015; T — MIL-PRF-39014.
(2) Failure Rate Designator: A — Not applicable (MIL-C-11015); M — 1%/1000 Hours, P — .1%/1000 Hours, R — .01%/1000 Hours, S — .001%/1000 Hours (MIL-PRF-39014)
(3) Add "V" for stand-off design (C066). Leave blank for the flat bottom design (C062).
(4) Insert "2" for standard design (Style C062). Insert "6" for stand-off design (Style C066). Note: Stand-offs are available only with the CKR, not the CK.

© KEMET Electronics Corporation, P.O. Box 5928, Greenville, S.C. 29606, (864) 963-6300

Ceramic Axial
Lead Tape and Reel Packaging

KEMET offers standard reeling of Molded and Conformally Coated Axial Leaded Ceramic Capacitors for automatic insertion or lead forming machines per EIA specification RS-296. KEMET'S internal specification four-digit suffix, 7200, is placed at the end of the part number to designate tape and reel packaging, ie: C410C104Z5U5CA7200.

Paper (50 lb.) test minimum is inserted between the layers of capacitors wound on reels for component pitch ≤ 0.400". Capacitor lead length may extend only a maximum of .0625" (1.59mm) beyond the tapes' edges. Capacitors are centered in a row between the two tapes and will deviate only ± 0.031 (0.79mm) from the row center. A minimum of 36" (91.5 cm) leader tape is provided at each end of the reel capacitors. Universal splicing clips are used to connect the tape. Standard reel quantities are shown on page 41.

Figure 1

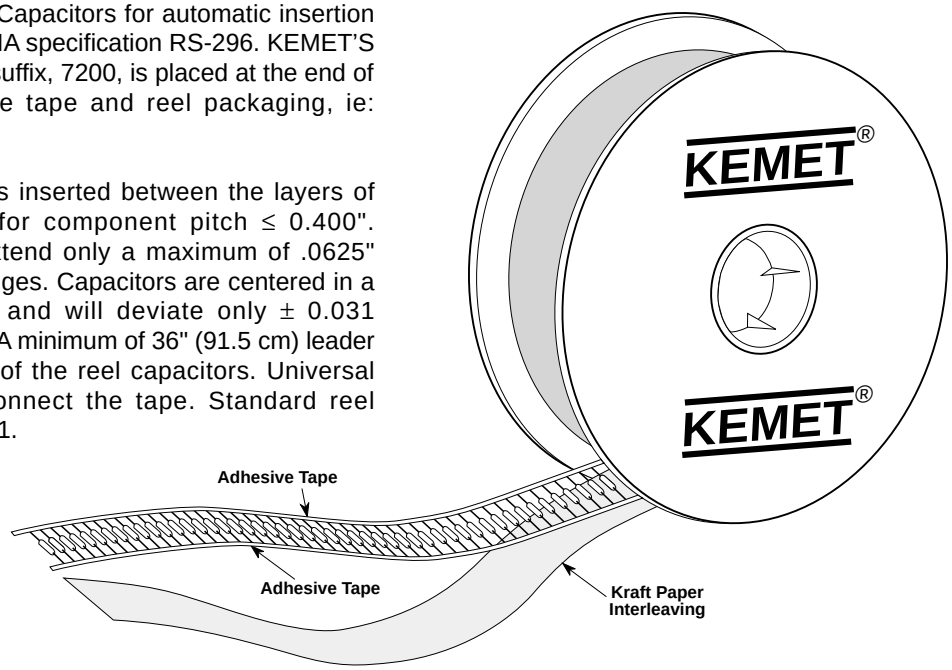

Figure 2

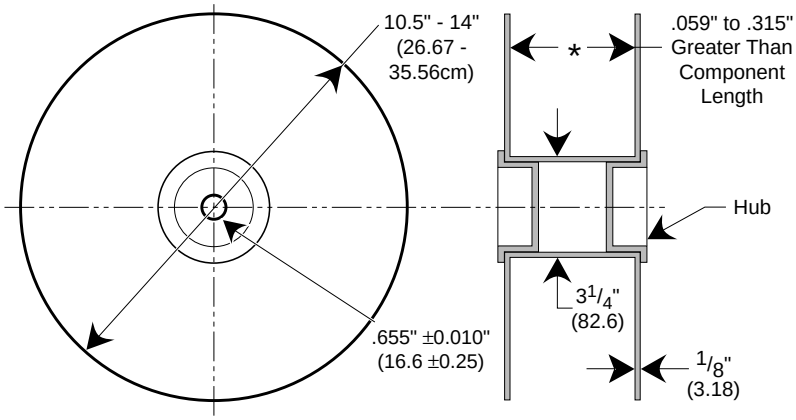

Figure 3

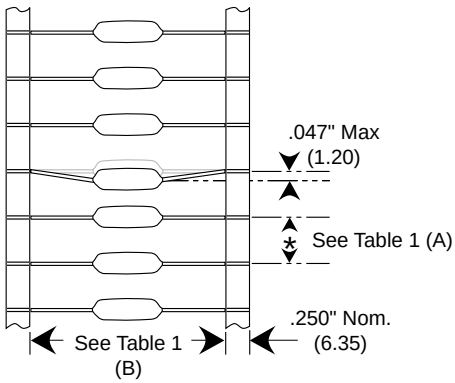

Table 1 **Dimensions in Inches & (Millimeters)**

Component Body Diameter	Component Pitch "A"	Inside Tape Spacing "B" ± 1.5mm (0.059")	
	0.020" or (±0.5mm)	I	III*
0" (0mm) to 0.197" (5mm) 0.197" (5.01mm) to 0.394: (10mm)	0.197" or (5mm) 0.394" or (10mm)	2.062" (52.4mm)	2.874" (73mm)

* Not Available for Conformally Coated Parts.

Ceramic Radial
Lead Tape and Reel Packaging

KEMET offers standard reeling of Molded and Conformally Coated Radial Leaded Ceramic Capacitors for automatic insertion per EIA specification RS-468. Parts are taped to a tagboard carrier strip, and wound on a reel as shown in Figure 1. Kraft paper interleaving is inserted between the layers of capacitors on the reel. Ammopack is also available, with the same lead tape configuration and package quantities.

Figure 1

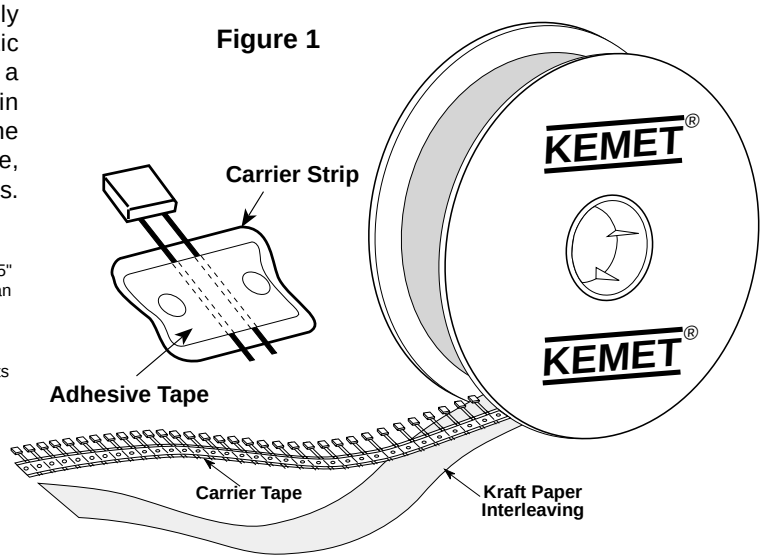

(Note: Non-standard lead lengths available in bulk only.)

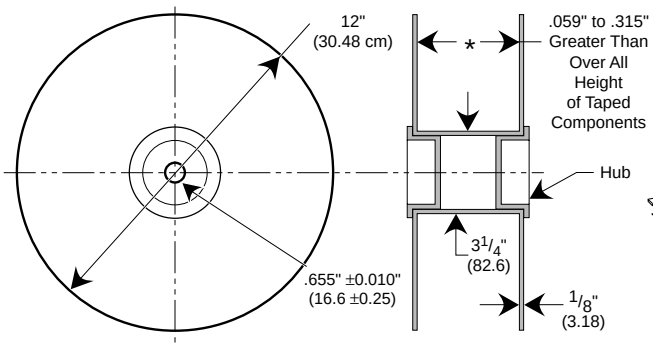

Figure 3: Standard Reel

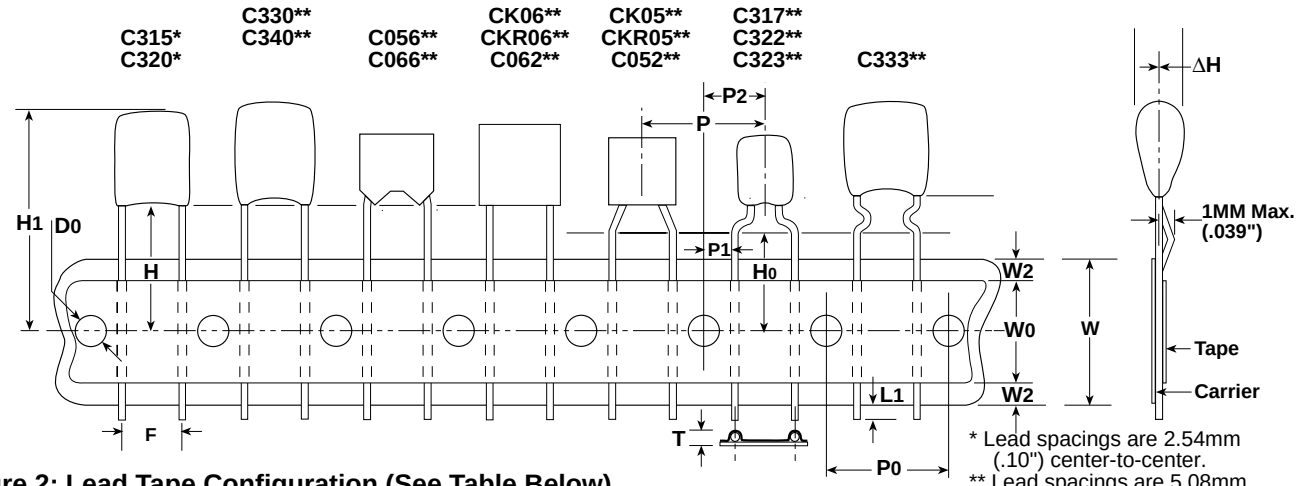

Figure 2: Lead Tape Configuration (See Table Below)

* Lead spacings are 2.54mm (.10") center-to-center.
** Lead spacings are 5.08mm (.20") center-to-center.
# See page 15 for exact lead configuration for Series.

Ceramic Radial Tape and Reel Dimensions in Millimeters & (Inches)

Dimension	Symbol	Nominal mm (inch)		Tolerance mm (inch)	
Sprocket Hole Diameter	Do	4.0 (.157)		± 0.2 (.008)	
Sprocket Hole Pitch	P0	12.7 (.500)		± 0.3 (.012)	
Component Pitch	P	12.7 (.500)		± 0.3 (.012)	
Lead Spacing (1)	F	5.08 (.20)	2.54 (.10)	+0.6 -0.2 (+.024 -.008)	
Sprocket Hole Center to Lead Center (1)	P1	3.81 (.150)	5.08 (.200)	± 0.7 (.028)	
Sprocket Hole Center to Component Center	P2	6.35 (.250)		± 1.3 (.051)	
Height to Seating Plane (straight leads) (2)	H	7301 16.0 (.630)	7303 18.0 (.709)	7301 ±0.5 (.020)	7303 Minimum
Component Height Above Tape Center	H1	32.2 (1.27)		Maximum	

Dimension	Symbol	Nominal mm (inch)		Tolerance mm (inch)	
Height to Seating Plane (formed leads) (2)	H0	7301 16.0 (.630)	7303 18.0 (.709)	7301 ±0.5 (.020)	7303 Minimum
Component Alignment	Δh	4.0 (.157)		±0.2 (.008)	
Lead Protrusion	L1	1.0 (.039)		Maximum	
Composite Tape Thickness	t	0.7 (.051)		±0.2 (.008)	
Overall Tape and Lead Thickness	T	1.5 (.059)		Maximum	
Carrier Tape Width	W	18.0 (.709)		+1.0 - 0.5 (+.039 -.020)	
Hold-Down Tape Width	W0	5.0 (.197)		Minimum	
Hold-Down Tape Location	W2	3.0 (.118)		Maximum	

(1) Measured at the egress from the carrier tape, on the component side.
(2) Determined by a 4 digit suffix placed at the end of the part number, as follows:
7301 = Recommended for parts with formed leads. Example: C322C104K5R5CA7301
7303 = Recommended for parts with straight leads. Example: C320C104K5R5CA7303

© KEMET Electronics Corporation, P.O. Box 5928, Greenville, S.C. 29606, (864) 963-6300

CERAMIC PACKAGING

KEMET Series	Military Style	Military Specification	Standard (1) Bulk Quantity	Ammo Pack Quantity Maximum	Maximum Reel Quantity	Reel Size
C114C-K-G	CK12, CC75	MIL-C-11015/	200/Box		5000	12"
C124C-K-G	CK13, CC76	MIL-PRF-20	200/Box		5000	12"
C192C-K-G	CK14, CC77		100/Box		3000	12"
C202C-K	CK15		25/Box		500	12"
C222C-K	CK16		10/Tray		300	12"
C052C-K-G	CK05, CC05		100/Bag	2000	2000	12"
C062C-K-G	CK06, CC06		100/Bag	1500	1500	12"
C114G	CCR75	MIL-PRF-20	200/Box		5000	12"
C124G	CCR76		200/Box		5000	12"
C192G	CCR77		100/Box		3000	12"
C202G	CC78-CCR78		25/Box		500	12"
C222G	CC79-CCR79		10/Tray		300	12"
C052/56G	CCR05		100/Bag		1700	12"
C062/66G	CCR06		100/Bag		1500	12"
C512G	CC07-CCR07		Footnote (2)		N/A	N/A
C522G	CC08-CCR08		Footnote (2)		N/A	N/A
C114T	CKR11	MIL-PRF-39014	200/Box		5000	12"
C124T	CKR12		200/Box		5000	12"
C192T	CKR14		100/Box		3000	12"
C202T	CKR15		25/Box		500	12"
C222T	CKR16		10/Tray		300	12"
C052/56T	CKR05		100/Bag		1700	12"
C062/66T	CKR06		100/Bag		1500	12"
C31X			500/Bag	2500	2500	12"
C32X			500/Bag	2500	2500	12"
C33X			250/Bag	1500	1500	12"
C340			100/Bag	1000	1000	12"
C350			50/Bag	N/A	N/A	N/A
C410			300/Box	4000	5000	12"
C412			200/Box	4000	5000	12"
C420			300/Box	4000	5000	12"
C430			200/Box	2000	2500	12"
C440			200/Box	2000	2500	12"
C512	N/A	N/A	Footnote (2)		N/A	N/A
C522	N/A	N/A	Footnote (2)		N/A	N/A
C617			500/Bag			
C622/C623			500/Bag			
C627/C628			500/Bag			
C630/C631			250/Bag			
C637/C638			250/Bag			
C640/C641			100/Bag			
C642/C643			100/Bag			
C647/C648			100/Bag			
C657/C658			50/Bag			
C667/C668			50/Bag			

NOTE: (1) Standard packaging refers to number of pieces per bag, tray or vial.
(2) Quantity varies. For further details, please consult the factory.

ELECTRICAL CHARACTERISTICS

The fundamental electrical properties of multilayer ceramic capacitors are as follows:

Polarity: Multilayer ceramic capacitors are not polar, and may be used with DC voltage applied in either direction.

Rated Voltage: This term refers to the maximum continuous DC working voltage permissible across the entire operating temperature range. Multilayer ceramic capacitors are not extremely sensitive to voltage, and brief applications of voltage above rated will not result in immediate failure. However, reliability will be reduced by exposure to sustained voltages above rated.

Capacitance: The standard unit of capacitance is the farad. For practical capacitors, it is usually expressed in microfarads (10^{-6} farad), nanofarads (10^{-9} farad), or picofarads (10^{-12} farad). Standard measurement conditions are as follows:

Class I (up to 1,000 pF):	1MHz and 1.2 VRMS maximum.
Class I (over 1,000 pF):	1kHz and 1.2 VRMS maximum.
Class II:	1 kHz and 1.0 ± 0.2 VRMS.
Class III:	1 kHz and 0.5 ± 0.1 VRMS.

Like all other practical capacitors, multilayer ceramic capacitors also have resistance and inductance. A simplified schematic for the equivalent circuit is shown in Figure 1. Other significant electrical characteristics resulting from these additional properties are as follows:

Figure 1

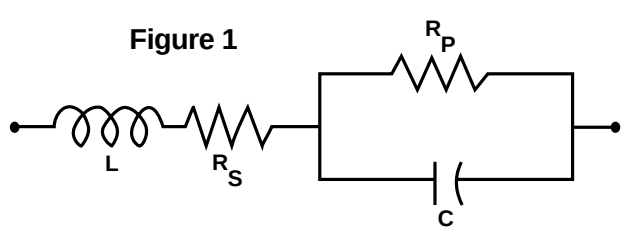

C = Capacitance **R_S = Equivalent Series Resistance (ESR)**

L = Inductance **R_P = Insulation Resistance (IR)**

Impedance: Since the parallel resistance (Rp) is normally very high, the total impedance of the capacitor is:

$$Z = \sqrt{R_S^2 + (X_C - X_L)^2}$$

Where **Z = Total Impedance**

RS = Equivalent Series Resistance

X_C = Capacitive Reactance = $\frac{1}{2\pi fC}$

X_L = Inductive Reactance = $2\pi fL$

The variation of a capacitor's impedance with frequency determines its effectiveness in many applications.

Dissipation Factor: Dissipation Factor (DF) is a measure of the losses in a capacitor under AC application. It is the ratio of the equivalent series resistance to the capacitive reactance, and is usually expressed in percent. It is usually measured simultaneously with capacitance, and under the same conditions. The vector diagram in Figure 2 illustrates the relationship between DF, ESR, and impedance. The reciprocal of the dissipation factor is called the "Q", or quality factor. For convenience, the "Q" factor is often used for very low values of dissipation factor. DF is sometimes called the "loss tangent" or "tangent δ", as derived from this diagram.

Figure 2

$$DF = \frac{ESR}{X_C}$$

$$X_C = \frac{1}{2\pi fC}$$

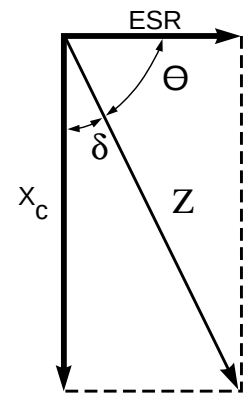

Insulation Resistance: Insulation Resistance (IR) is the DC resistance measured across the terminals of a capacitor, represented by the parallel resistance (Rp) shown in Figure 1. For a given dielectric type, electrode area increases with capacitance, resulting in a decrease in the insulation resistance. Consequently, insulation resistance is usually specified as the "RC" (IR x C) product, in terms of ohm-farads or megohm-microfarads. The insulation resistance for a specific capacitance value is determined by dividing this product by the capacitance. However, as the nominal capacitance values become small, the insulation resistance calculated from the RC product reaches values which are impractical. Consequently, IR specifications usually include both a minimum RC product and a maximum limit on the IR calculated from that value. For example, a typical IR specification might read "1,000 megohm-microfarads or 100 gigohms, whichever is less."

Insulation Resistance is the measure of a capacitor to resist the flow of DC leakage current. It is sometimes referred to as "leakage resistance." The DC leakage current may be calculated by dividing the applied voltage by the insulation resistance (Ohm's Law).

Dielectric Withstanding Voltage: Dielectric withstanding voltage (DWV) is the peak voltage which a capacitor is designed to withstand for short periods of time without damage. All KEMET multilayer ceramic capacitors will withstand a test voltage of 2.5 x the rated voltage for 60 seconds.

KEMET specification limits for these characteristics at standard measurement conditions are shown in Table 1 on page 4. Variations in these properties caused by changing conditions of temperature, voltage, frequency, and time are covered in the following sections.

 © KEMET Electronics Corporation, P.O. Box 5928, Greenville, S.C. 29606, (864) 963-6300

TABLE 1
EIA TEMPERATURE CHARACTERISTIC CODES FOR CLASS I DIELECTRICS

Significant Figure of Temperature Coefficient		Multiplier Applied to Temperature Coefficient		Tolerance of Temperature Coefficient *	
PPM per Degree C	Letter Symbol	Multi-plier	Number Symbol	PPM per Degree C	Letter Symbol
0.0	C	-1	0	±30	G
0.3	B	-10	1	±60	H
0.9	A	-100	2	±120	J
1.0	M	-1000	3	±250	K
1.5	P	-100000	4	±500	L
2.2	R	+1	5	±1000	M
3.3	S	+10	6	±2500	N
4.7	T	+100	7		
7.5	U	+1000	8		
		+10000	9		

** These symetrical tolerances apply to a two-point measurement of temperature coefficient: one at 25°C and one at 85°C. Some deviation is permitted at lower temperatures. For example, the PPM tolerance for C0G at -55 is +30 / -72 PPM.*

TABLE 2
EIA TEMPERATURE CHARACTERISTIC CODES FOR CLASS II & III DIELECTRICS

Low Temperature Rating		High Temperature Rating		Maximum Capacitance Shift	
Degree Celcius	Letter Symbol	Degree Celcius	Number Symbol	Percent	Letter Symbol
+10C	Z	+45C	2	±1.0%	A
-30C	Y	+65C	4	±1.5%	B
-55C	X	+85C	5	±2.2%	C
		+105C	6	±3.3%	D
		+125C	7	±4.7%	E
		+150C	8	±7.5%	F
		+200C	9	±10.0%	P
				±15.0%	R
				±22.0%	S
				+22/-33%	T
				+22/-56%	U
				+22/-82%	V

EFFECT OF TEMPERATURE

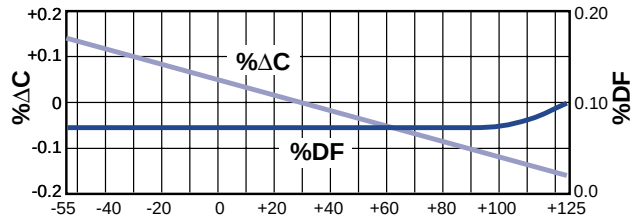

Figure 3. **Temperature °C**
Capacitance & DF vs Temperature - C0G

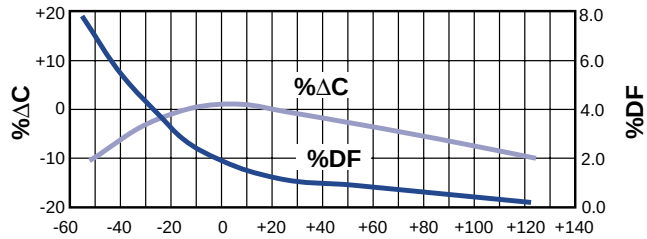

Figure 4. **Temperature °C**
Capacitance & DF vs Temperature - X7R

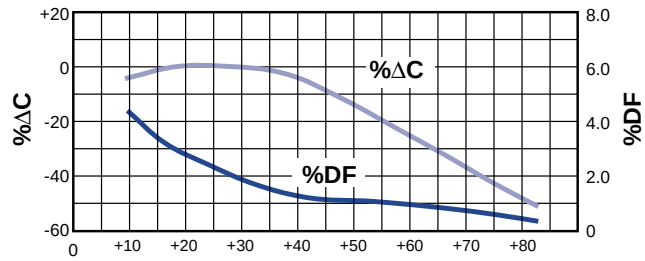

Figure 5. **Temperature °C**
Capacitance & DF vs Temperature - Z5U

EFFECT OF APPLIED VOLTAGE

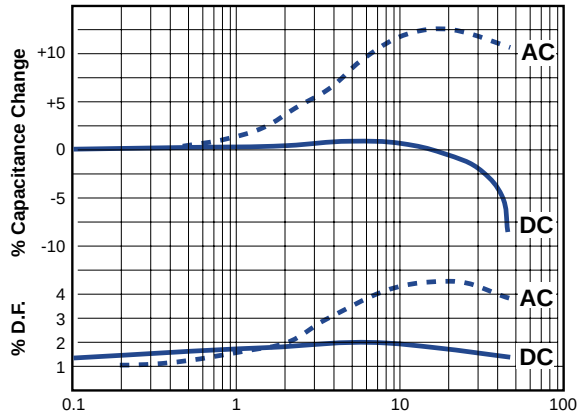

Figure 6. AC or DC Volts Applied
Typical Effects of 1000 Hz AC and DC Voltage Level on Capacitance and Dissipation Factor - X7R
Note: C0G Dielectric capacitance and dissipation factor are stable with voltage.

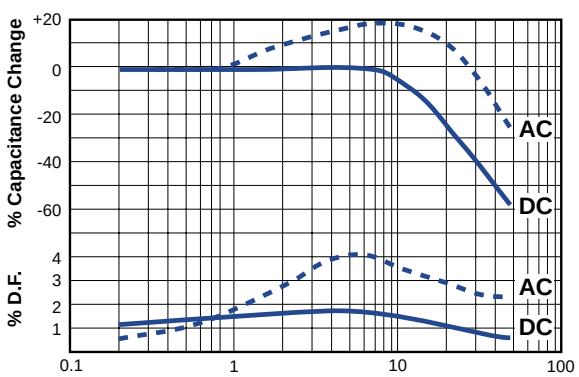

Figure 7. AC or DC Volts Applied
Typical Effects of 1000 Hz AC and DC Voltage Level on Capacitance and Dissipation Factor - Z5U
Note: C0G Dielectric capacitance and dissipation factor are stable with voltage.

Effect of Temperature: Both capacitance and dissipation factor are affected by variations in temperature. The maximum capacitance change with temperature is defined by the temperature characteristic. However, this only defines a "box" bounded by the upper and lower operating temperatures and the minimum and maximum capacitance values. Within this "box", the variation with temperature depends upon the specific dielectric formulation. Typical curves for KEMET capacitors are shown in Figures 3, 4, and 5. These figures also include the typical change in dissipation factor for KEMET capacitors.

Insulation resistance decreases with temperature. Typically, the insulation resistance at maximum rated temperature is 10% of the 25°C value.

Effect of Voltage: Class I ceramic capacitors are not affected by variations in applied AC or DC voltages. For Class II and III ceramic capacitors, variations in voltage affect only the capacitance and dissipation factor. The application of DC voltage higher than 5 vdc reduces both the capacitance and dissipation factor. The application of AC voltages up to 10-20 Vac tends to increase both capacitance and dissipation factor. At higher AC voltages, both capacitance and dissipation factor begin to decrease.

Typical curves showing the effect of applied AC and DC voltage are shown in Figure 6 for KEMET X7R capacitors and Figure 7 for KEMET Z5U capacitors.

Effect of Frequency: Frequency affects both capacitance and dissipation factor. Typical curves for KEMET multilayer ceramic capacitors are shown in Figures 8 and 9.

The variation of impedance with frequency is an important consideration in the application of multilayer ceramic capacitors. Total impedance of the capacitor is the vector of the capacitive reactance, the inductive reactance, and the ESR, as illustrated in Figure 2. As frequency increases, the capacitive reactance decreases. However, the series inductance (L) shown in Figure 1 produces inductive reactance, which increases with frequency. At some frequency, the impedance ceases to be capacitive and becomes inductive. This point, at the bottom of the V-shaped impedance versus frequency curves, is the self-resonant frequency. At the self-resonant frequency, the reactance is zero, and the impedance consists of the ESR only.

Typical impedance versus frequency curves for KEMET multilayer ceramic capacitors are shown in Figures 10, 11, and 12. These curves apply to KEMET capacitors in chip form, without leads. Lead configuration and lead length have a significant impact on the series inductance. The lead inductance is approximately 10nH/inch, which is large compared to the inductance of the chip. The effect of this additional inductance is a decrease in the self-resonant frequency, and an increase in impedance in the inductive region above the self-resonant frequency.

Effect of Time: The capacitance of Class II and III dielectrics change with time as well as with temperature, voltage and frequency. This change with time is known as "aging." It is caused by gradual realignment of the crystalline structure of the ceramic dielectric material as it is cooled below its Curie temperature, which produces a loss of capacitance with time. The aging process is predictable and follows a logarithmic decay. Typical aging rates for C0G, X7R, and Z5U dielectrics are as follows:

C0G	None
X7R	2.0% per decade of time
Z5U	5.0% per decade of time

Typical aging curves for X7R and Z5U dielectrics are shown in Figure 13.

The aging process is reversible. If the capacitor is heated to a temperature above its Curie point for some period of time, de-aging will occur and the capacitor will regain the capacitance lost during the aging process. The amount of de-aging depends on both the elevated temperature and the length of time at that temperature. Exposure to 150°C for one-half hour or 125°C for two hours is usually sufficient to return the capacitor to its initial value.

Because the capacitance changes rapidly immediately after de-aging, capacitance measurements are usually delayed for at least 10 hours after the de-aging process, which is often referred to as the "last heat." In addition, manufacturers utilize

 © KEMET Electronics Corporation, P.O. Box 5928, Greenville, S.C. 29606, (864) 963-6300

the aging rates to set factory test limits which will bring the capacitance within the specified tolerance at some future time, to allow for customer receipt and use. Typically, the test limits are adjusted so that the capacitance will be within the specified tolerance after either 1,000 hours or 100 days, depending on the manufacturer and the product type.

POWER DISSIPATION

Power dissipation has been empirically determined for two representative KEMET series: C052 and C062. Power dissipation capability for various mounting configurations is shown in Table 3. This table was extracted from Engineering Bulletin F-2013, which provides a more detailed treatment of this subject.

Note that no significant difference was detected between the two sizes in spite of a 2 to 1 surface area ratio. Due to the materials used in the construction of multilayer ceramic capacitors, the power dissipation capability does not depend greatly on the surface area of the capacitor body, but rather on how well heat is conducted out of the capacitor lead wires. Consequently, this power dissipation capability is applicable to other leaded multilayer styles and sizes.

TABLE 3
POWER DISSIPATION CAPABILITY
(Rise in Celsius degrees per Watt)

Mounting Configuration	Power Dissipation of C052 & C062
1.00" leadwires attached to binding post of GR-1615 bridge (excellent heat sink)	90 Celsius degrees rise per Watt ±10%
0.25" leadwires attached to binding post of GR-1615 bridge	55 Celsius degrees rise per Watt ±10%
Capacitor mounted flush to 0.062" glass-epoxy circuit board with small copper traces	77 Celsius degrees rise per Watt ±10%
Capacitor mounted flush to 0.062" glass-epoxy circuit board with four square inches of copper land area as a heat sink	53 Celsius degrees rise per Watt ±10%

As shown in Table 3, the power dissipation capability of the capacitor is very sensitive to the details of its use environment. The temperature rise due to power dissipation should not exceed 20°C. Using that constraint, the maximum permissible power dissipation may be calculated from the data provided in Table 3.

It is often convenient to translate power dissipation capability into a permissible AC voltage rating. Assuming a sinusoidal wave form, the RMS "ripple voltage" may be calculated from the following formula:

$$E = Z \times \sqrt{\frac{P_{MAX}}{R}}$$

Where **E = RMS Ripple Voltage (volts)**

P = Power Dissipation (watts)

Z = Impedence

R = ESR

The data necessary to make this calculation is included in Engineering Bulletin F-2013. However, the following criteria must be observed:

1. The temperature rise due to power dissipation should be limited to 20°C.
2. The peak AC voltage plus the DC voltage must not exceed the maximum working voltage of the capacitor.

Provided that these criteria are met, multilayer ceramic capacitors may be operated with AC voltage applied without need for DC bias.

RELIABILITY

A well constructed multilayer ceramic capacitor is extremely reliable and, for all practical purposes, has an infinite life span when used within the maximum voltage and temperature ratings. Capacitor failure may be induced by sustained operation at voltages that exceed the rated DC voltage, voltage spikes or transients that exceed the dielectric withstanding voltage, sustained operation at temperatures above the maximum rated temperature, or the excessive temperature rise due to power dissipation.

Failure rate is usually expressed in terms of percent per 1,000 hours or in FITS (failure per billion hours). Some KEMET series are qualified under U.S. military established reliability specifications MIL-PRF-20, MIL-PRF-123, MIL-PRF-39014, and MIL-PRF-55681. Failure rates as low as 0.001% per 1,000 hours are available for all capacitance / voltage ratings covered by these specifications. These specifications and accompanying Qualified Products List should be consulted for details.

For series not covered by these military specifications, an internal testing program is maintained by KEMET Quality Assurance. Samples from each week's production are subjected to a 2,000 hour accelerated life test at 2 x rated voltage and maximum rated temperature. Based on the results of these tests, the average failure rate for all non-military series covered by this test program is currently 0.06% per 1,000 hours at maximum rated conditions. The failure rate would be much lower at typical use conditions. For example, using MIL-HDBK-217D this failure rate translates to 0.9 FITS at 50% rated voltage and 50°C.

Current failure rate details for specific KEMET multilayer ceramic capacitor series are available on request.

MISAPPLICATION

Ceramic capacitors, like any other capacitors, may fail if they are misapplied. Typical misapplications include exposure to excessive voltage, current or temperature. If the dielectric layer of the capacitor is damaged by misapplication the electrical energy of the circuit can be released as heat, which may damage the circuit board and other components as well.

If potential for misapplication exists, it is recommended that precautions be taken to protect personnel and equipment during initial application of voltage. Commonly used precautions include shielding of personnel and sensing for excessive power drain during board testing.

EFFECT OF FREQUENCY

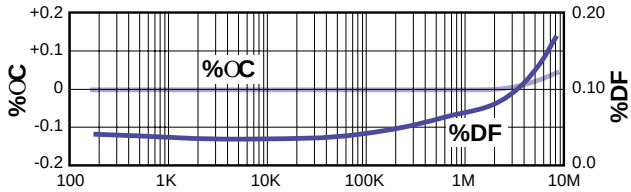

Figure 8. Frequency - Hertz
Capacitance & DF vs Frequency - C0G

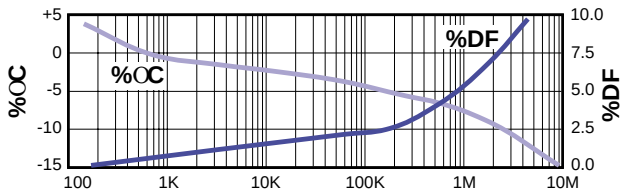

Figure 9. Frequency - Hertz
Capacitance & DF vs Frequency - X7R & Z5U

EFFECT OF TIME

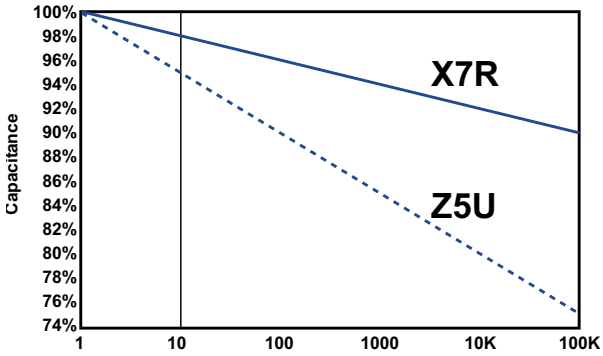

Figure 13. Typical Aging Rates for X7R & Z5U

IMPEDANCE VS FREQUENCY

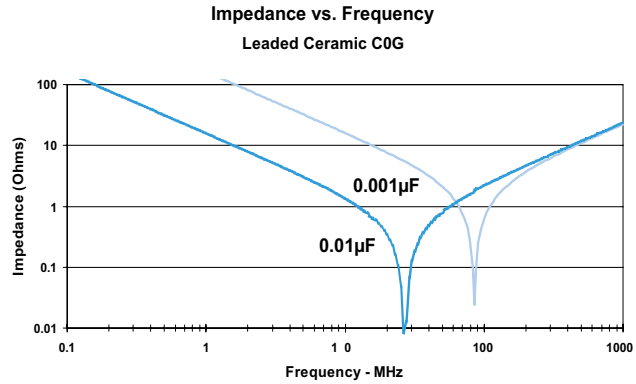

Figure 10. Impedance vs Frequency for C0G Dielectric

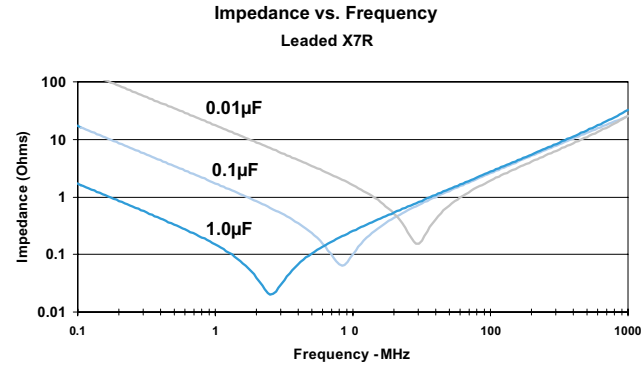

Figure 11. Impedance vs Frequency for X7R Dielectric

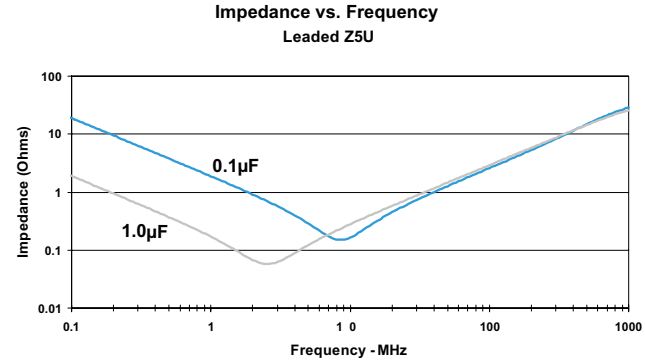

Figure 12. Impedance vs Frequency for Z5U Dielectric

© KEMET Electronics Corporation, P.O. Box 5928, Greenville, S.C. 29606, (864) 963-6300

KEMET Electronics Corporation

World Sales Headquarters
P.O. Box 5928 • Greenville, SC 29606 • www.kemet.com
Phone: (864) 963-6300 • Fax: (864) 963-6521

USA/Canada Locations

KEMET Electronics Corporation
2350 Mission College Blvd., Suite 972
Santa Clara, CA 95054
Phone: 408-986-0424
Fax: 408-986-1442

KEMET Electronics Corporation
Schaumburg Corporate Center
Suite 350, 1515 Woodfield Road
Schaumburg, IL 60173
Phone: 847-517-1030
Fax: 847-517-1037

KEMET Electronics Corporation
66 Concord St., Suite Z
Wilmington, MA 01887
Phone: 978-658-1663
Fax: 978-658-1790

KEMET Electronics Corporation
8445 Freeport Parkway, Suite 320
Irving, TX 75063
Phone: 972-870-9530
Fax: 972-870-9537

KEMET Electronics Canada Ltd.
10 Kensington Road, Suite 1107
Brampton, L6T 3V4 Ontario
Canada
Phone: 905-595-0893
Fax: 905-595-0894

KEMET Electronics Canada Ltd.
6001 35th Avenue
LavaL West, Quebec, Canada H7R 3P7
Phone: 450-962-0806
Fax: 450-962-6462

Europe/Africa Locations

KEMET Electronics S.A.
1-3, Avenue de la Paix
P.O.B. 76
CH-1211 Geneva 20,
Switzerland
Phone: 41-22-715-0100
Fax: 41-22-715-0170

KEMET Electronics Ltd.
Waterfront House, 55/61 South St.
Bishop's Stortford
Hertfordshire, CM23 3AL
United Kingdom
Phone: 44-1279-757201
Fax: 44-1279-757188

KEMETElectronics GmbH
Elisabethstrasse 89-91
D-80797 Munich, Germany
Phone: 49-89-5908-2053
Fax: 49-56-5908-1303

KEMET Electronics S.A.R.L.
ZAC Paris Rive Gauche
118-122, avenue de France
75013 Paris, France
Phone: 33-1-4646-1009
Fax: 33-1-4646-1599

Asia Locations

KEMET Electronics (Shanghai) Co., Ltd.
Rm2905, Raffles City (Office Building)
No. 268, Xi Zang Middle Road
Shanghai 200001, China
Phone: 86-21-6340-4068
Fax: 86-21-6340-4050

KEMET Electronics Asia Ltd.
Rm 605, Citic Bldg.
No. 19 Jian Guo Men Wai Da Jie
Beijing, 100004, China
Phone: 8610-8526-3628
Fax: 8610-8526-3626

KEMET Electronics Marketing PTE Ltd.
8-2-04, Sunny Point Kompleks
Jalan Batu Uban, 11700 Penang
Penang, Malaysia
Phone: 60-4-6595200
Fax: 60-4-6595220

KEMET Electronics Marketing PTE Ltd.
101 Thomson Road, #23-03
United Square
Singapore, 307591, Singapore
Phone: 65-6353-6636
Fax: 65-6353-6656

KEMET Electronics Asia Ltd.
Rm. 825 & 826, 8/F, Renminan Road
Kerry Center
Shenzhen 518001 China
Phone: 867-55-25181306
Fax: 867-55-25181307

KEMET Electronics Asia Ltd.
30 Canton Rd., Room 1512
Silvercord Tower II
Tsimshatshui, Kowloon Bay, Hong Kong
Phone: 852-2305-1168
Fax: 852-2759-0345

KEMET Electronics Corporation
Taiwan Branch, 3-4F, No. 148, Section 4
Chung-Hsaio E. Rd.
Taipei, Taiwan ROC
Phone: 886-2-27528585
Fax: 886-2-27213129

NOTICE: Place 011 in front of the above Phone and Fax numbers for Europe and Asia, when dialing from a United States exchange.
Note: KEMET reserves the right to modify minor details of internal and external construction at any time in the interest of product improvement.
KEMET does not assume any responsibility for infringement that might result from the use of KEMET Capacitors in potential circuit designs.
© "KEMET" is a registered trademark of KEMET Electronics Corporation. © KEMET Electronics Corporation