3.3V, 1.5GHz ÷1/÷2 DIFFERENTIAL LVECL/LVPECL PROGRAMMABLE CLOCK GENERATOR AND 1:15 FANOUT BUFFER

Precision Edge®
SY100E222L

FEATURES

- **Four programmable output banks and 15 total LVPECL-compatible differential outputs**
- **Pin-compatible, plug-in replacement to MC100LVE222FA**
- **f_{MAX} clock = 1.5GHz**
- **50ps output-to-output skew**
- **Four output banks with independent ÷1, ÷2 frequency control**
- **100k compatible I/O**
- **Power supply 3.3V ±10%**
- **–40°C to +85°C temperature range**
- **Available in 52-pin LQFP package**

APPLICATIONS

- **SONET/SDH channel applications**
- **Fibre Channel multi-channel applications**
- **Gigabit Ethernet multi-channel applications**

FUNCTIONAL BLOCK DIAGRAM

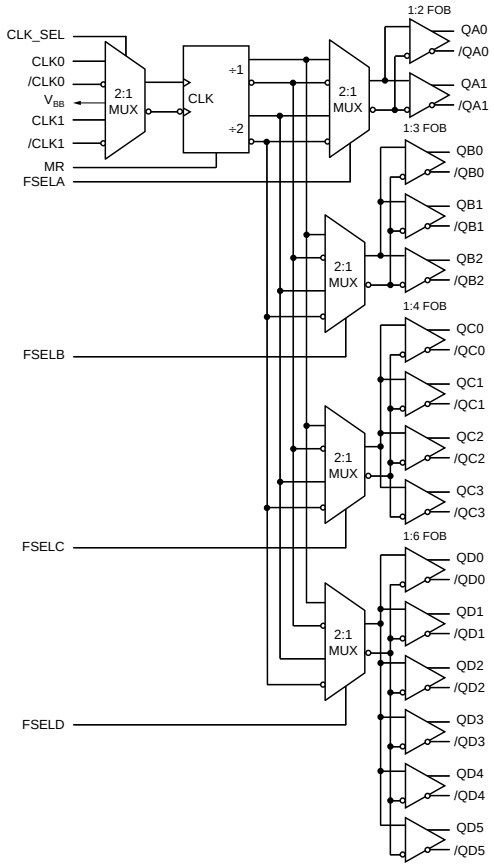

Precision Edge®

DESCRIPTION

The SY100E222L is a low-skew, low-jitter device capable of receiving a high-speed LVECL/LVPECL input in either a single-ended or differential configuration. For single-ended configurations, a V_{BB} output reference is supplied by the SY100E222L. A 2:1 input multiplexer selects from two differential input pairs by means of the CLK_SEL input select.

The internal programmable divider for each of the four banks generates a ÷1 or ÷2 frequency of the selected input. The ÷1/÷2 divider outputs can be asynchronously synchronized with the master reset (MR) input so that the outputs will start out in a known state.

The 15 total outputs are partitioned into four independently selected output banks in a 2/3/4/6 fanout configuration. Each of the four banks can independently select the ÷1 or ÷2 output frequency by means of the four separate frequency select pins (FSELA-FSELD) inputs.

The SY100E222L is pin-for-pin compatible with the MC100LVE222FA device.

The SY100E222L is part of a Micrel's Precision Edge™ product family. For other integrated clock divider plus fanout buffer options, consider Micrel's SY89200 family.

All support documentation can be found on Micrel's web site at www.micrel.com.

CROSS REFERENCE TABLE

Micrel Part Number	ON Semiconductor
SY100E222LTI	MC100LVE222FA
SY100E222LTI TR	MC100LVE222FAR2

Precision Edge is a registered trademark of Micrel, Inc.