1 pC Charge Injection, 100 pA Leakage, Quad SPST Switches

DESCRIPTION

The DG611A, DG612A and DG613A contain four independently selectable SPST switches. They offer improved performance over the industry standard DG611 series. The DG611A and DG612A have all switches normally closed and normally open respectively, while the DG613A has 2 normally open and 2 normally closed switches.

They are designed to operate from a 2.7 V to 12 V single supply or from ± 2.7 V to ± 5 V dual supplies and are fully specified at + 3 V, + 5 V and ± 5 V. All control logic inputs have guaranteed 2 V logic high limits when operating from + 5 V or ± 5 V supplies and 1.4 V when operating from a + 3 V supply.

The DG611A, DG612A and DG613A switches conduct equally well in both directions and offer rail to rail analog signal handling.

1 pC low charge injection, coupled with very low switch capacitance: 2 pF, fast switching speed: t_{on}/t_{off} 27 ns/16 ns and excellent 3 dB bandwidth: 720 MHz, make these products ideal for precision instrumentation, high-end data acquisition, automated test equipment and high speed communication applications.

Operation temperature is specified from - 40 °C to + 125 °C.

The DG611A, DG612A and DG613A are available in 16 lead SOIC, TSSOP and the space saving 1.8 mm x 2.6 mm miniQFN packages.

FEATURES

- **Halogen-free according to IEC 61249-2-21 Definition**
- Low charge injection (1 pC typ.)
- Leakage current < 0.25 nA at 85 °C
- Low switch capacitance (C_{soff} 2 pF typ.)
- Low $R_{DS(on)}$ - 115 Ω max.
- Fully specified with single supply operation at 3 V, 5 V and dual supplies at ± 5 V
- Low voltage, 2.5 V CMOS/TTL compatible
- 720 MHz, 3 dB bandwidth
- Excellent isolation performance (62 dB at 10 MHz)
- Excellent crosstalk performance (90 dB at 10 MHz)
- Fully specified from - 40 °C to + 85 °C and - 40 °C to + 125 °C
- 16 lead SOIC, TSSOP and miniQFN package (1.8 mm x 2.6 mm)
- Compliant to RoHS Directive 2002/95/EC

Pb-free
RoHS COMPLIANT
HALOGEN FREE

APPLICATIONS

- Precision instrumentation
- Medical instrumentation
- Automated test equipment
- High speed communications applications
- High-end data acquisition
- Sample and hold applications
- Sample and hold systems

FUNCTIONAL BLOCK DIAGRAM AND PIN CONFIGURATION

DG611A SOIC/TSSOP

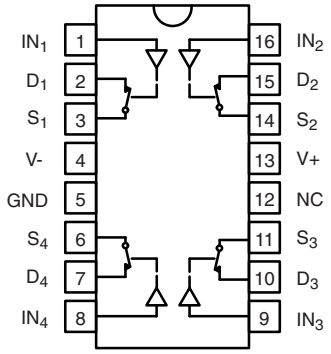

Top View

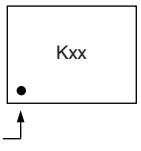

Device Marking: Kxx for DG611A
(miniQFN16) Lxx for DG612A
Pxx for DG613A
xx = Date/Lot Traceability Code

DG611A miniQFN

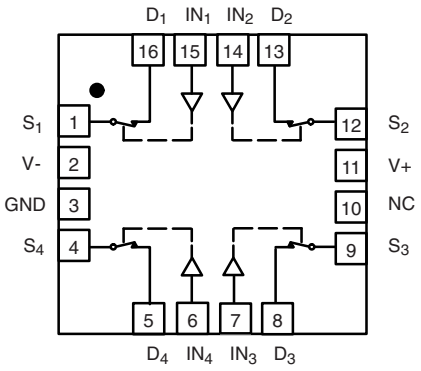

Top View

TRUTH TABLE

Logic	DG611A	DG612A
0	On	Off
1	Off	On

FUNCTIONAL BLOCK DIAGRAM AND PIN CONFIGURATION

DG613A SOIC/TSSOP

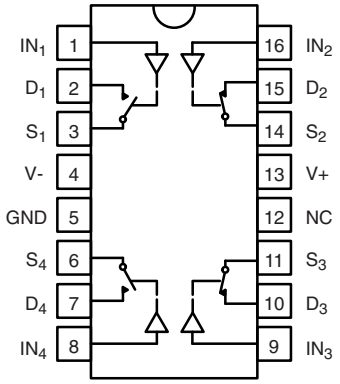

Top View

DG613A miniQFN

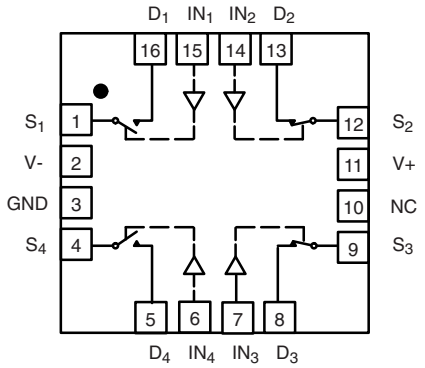

Top View

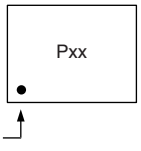

Device Marking: Pxx for DG613A (miniQFN16)

TRUTH TABLE		
Logic	**SW_1, SW_4**	**SW_2, SW_3**
0	Off	On
1	On	Off

ORDERING INFORMATION		
Temp. Range	**Package**	**Part Number**
DG611A, DG612A, DG613A		
- 40 °C to 125 °C[a]	16-pin TSSOP	DG611AEQ-T1-E3 DG612AEQ-T1-E3 DG613AEQ-T1-E3
	16-pin Narrow SOIC	DG611AEY-T1-E3 DG612AEY-T1-E3 DG613AEY-T1-E3
	16-pin miniQFN	DG611AEN-T1-E4 DG612AEN-T1-E4 DG613AEN-T1-E4

Notes:
a. - 40 °C to 85 °C datasheet limits apply.

ABSOLUTE MAXIMUM RATINGS (T_A = 25 °C, unless otherwise noted)			
Parameter		**Limit**	**Unit**
V + to V -		14	V
GND to V -		7	
Digital Inputs[a], V_S, V_D		(V -) - 0.3 V to (V +) + 0.3 V or 30 mA, whichever occurs first	
Continuous Current (Any Terminal)		30	mA
Peak Current, S or D (Pulsed 1 ms, 10 % Duty Cycle)		100	
Storage Temperature		- 65 to 150	°C
Power Dissipation (Package)[b]	16-pin TSSOP[c]	450	mW
	16-pin miniQFN[d]	525	
	16-pin Narrow SOIC[e]	640	
Thermal Resistance (Package)[b]	16-pin TSSOP	178	°C/W
	16-pin miniQFN	152	
	16-pin Narrow SOIC	125	

Notes:
a. Signals on SX, DX, or INX exceeding V + or V - will be clamped by internal diodes. Limit forward diode current to maximum current ratings.
b. All leads welded or soldered to PC Board.
c. Derate 5.6 mW/°C above 70 °C.
d. Derate 6.6 mW/°C above 70 °C.
e. Derate 8 mW/°C above 70 °C.
f. Manual soldering with iron is not recommended for leadless components. The miniQFN-16 is a leadless package. The end of the lead terminal is exposed copper (not plated) as a result of the singulation process in manufacturing. A solder fillet at the exposed copper lip cannot be guaranteed and is not required to ensure adequate bottom side solder interconnection.

SPECIFICATIONS FOR DUAL SUPPLIES (V + = + 5 V, V - = - 5 V)									
Parameter	Symbol	Test Conditions Unless Otherwise Specified V + = + 5 V, V - = - 5 V V_{IN} = 2 V, 0.8 V[a]	Temp.[b]	Typ.[c]	- 40 °C to 125 °C Min.[d]	- 40 °C to 125 °C Max.[d]	- 40 °C to 85 °C Min.[d]	- 40 °C to 85 °C Max.[d]	Unit
Analog Switch									
Analog Signal Range[e]	V_{ANALOG}		Full		- 5	5	- 5	5	V
On-Resistance	R_{ON}	I_S = 1 mA, V_D = - 3 V, 0 V, + 3 V	Room Full	72		115 160		115 140	Ω
On-Resistance Match	ΔR_{ON}	I_S = 1 mA, V_D = ± 3 V	Room Full	0.7		4 6.5		4 5.5	
On-Resistance Flatness	$R_{FLATNESS}$	I_S = 1 mA, V_D = - 3 V, 0 V, + 3 V	Room Full	25		40 60		40 55	
Switch Off Leakage Current	$I_{S(off)}$	V + = 5.5 V, V - = - 5.5 V V_D = + 4.5 V/- 4.5 V V_S = - 4.5 V/+ 4.5 V	Room Full	± 0.02	- 0.1 - 2	0.1 2	- 0.1 - 0.25	0.1 0.25	nA
	$I_{D(off)}$		Room Full	± 0.02	- 0.1 - 2	0.1 2	- 0.1 - 0.25	0.1 0.25	
Switch On Leakage Current	$I_{D(on)}$	V + = 5.5 V, V - = - 5.5 V V_D = V_S = ± 4.5 V	Room Full	± 0.02	- 0.1 - 6	0.1 6	- 0.1 - 0.25	0.1 0.25	
Digital Control									
Input Current, V_{IN} Low	I_{IL}	V_{IN} Under Test = 0.8 V	Full	0.005	- 0.1	0.1	- 0.1	0.1	µA
Input Current, V_{IN} High	I_{IH}	V_{IN} Under Test = 2 V	Full	0.005	- 0.1	0.1	- 0.1	0.1	
Input Capacitance[e]	C_{IN}	f = 1 MHz	Room	2					pF
Dynamic Characteristics									
Turn-On Time	t_{ON}	R_L = 300 Ω, C_L = 35 pF V_S = ± 3 V, see figure 1	Room Full	27		55 90		55 75	ns
Turn-Off Time	t_{OFF}		Room Full	16		35 50		35 45	
Break-Before-Make Time Delay	t_{BBM}	DG613A only, V_S = 3 V R_L = 300 Ω, C_L = 35 pF	Room Full	15	2		2		
Charge Injection[e]	Q	V_g = 0 V, R_g = 0 Ω, C_L = 1 nF	Room	1					pC
Off Isolation[e]	OIRR	R_L = 50 Ω, C_L = 5 pF f = 10 MHz	Room	- 62					dB
Channel-to-Channel Crosstalk[e]	X_{TALK}		Room	- 90					
3 dB Bandwidth[e]	BW	R_L = 50 Ω, C_L = 5 pF	Room	720					MHz
Source Off Capacitance[e]	$C_{S(off)}$	f = 1 MHz; V_S = 0 V	Room	2					pF
Drain Off Capacitance[e]	$C_{D(off)}$		Room	3					
Drain On Capacitance[e]	$C_{D(on)}$	f = 1 MHz; V_S = V_D = 0 V	Room	9					
Total Harmonic Distortion[e]	THD	Signal = 1 V_{RMS}, 20 Hz to 20 kHz, R_L = 600 Ω	Room	0.01					%
Power Supplies									
Power Supply Current	I+	V + = + 5 V, V - = - 5 V V_{IN} = 0 V or 5 V	Room Full	0.001		0.1 1		0.1 1	µA
Negative Supply Current	I-		Room Full	- 0.001	- 0.1 - 1		- 0.1 - 1		
Ground Current	I_{GND}		Room Full	- 0.001	- 0.1 - 1		- 0.1 - 1		

SPECIFICATIONS FOR UNIPOLAR SUPPLIES (V + = + 5 V, V - = 0 V)									
		Test Conditions Unless Otherwise Specified V + = + 5 V, V - = 0 V V_{IN} = 2 V, 0.8 V[a]			- 40 °C to 125 °C		- 40 °C to 85 °C		
Parameter	Symbol		Temp.[b]	Typ.[c]	Min.[d]	Max.[d]	Min.[d]	Max.[d]	Unit
Analog Switch									
Analog Signal Range[e]	V_{ANALOG}		Full		0	5	0	5	V
On-Resistance	R_{ON}	V + = + 5 V, V - = 0 V I_S = 1 mA, V_D = + 3.5 V	Room Full	139		180 235		180 215	Ω
On-Resistance Match	ΔR_{ON}	V + = + 5 V, V - = 0 V, I_S = 1 mA, V_D = + 3.5 V	Room Full	1		6 10		6 9	
On-Resistance Flatness	$R_{FLATNESS}$	V + = + 5 V, V - = 0 V, I_S = 1 mA, V_D = 0 V, + 3.5 V	Room Full	56		80 120		80 110	
Switch Off Leakage Current	$I_{S(off)}$	V + = 5.5 V, V - = 0 V V_D = 4.5 V/1 V V_S = 1 V/4.5 V	Room Full	± 0.02	- 0.1 - 2	0.1 2	- 0.1 - 0.25	0.1 0.25	nA
	$I_{D(off)}$		Room Full	± 0.02	- 0.1 - 2	0.1 2	- 0.1 - 0.25	0.1 0.25	
Switch On Leakage Current	$I_{D(on)}$	V + = 5.5 V, V - = 0 V V_D = V_S = 1 V/4.5 V	Room Full	± 0.02	- 0.1 - 6	0.1 6	- 0.1 - 0.25	0.1 0.25	
Digital Control									
Input Current, V_{IN} Low	I_{IL}	V_{IN} Under Test = 0.8 V	Full	0.005	- 0.1	0.1	- 0.1	0.1	µA
Input Current, V_{IN} High	I_{IH}	V_{IN} Under Test = 2 V	Full	0.005	- 0.1	0.1	- 0.1	0.1	
Input Capacitance[e]	C_{IN}	f = 1 MHz	Room	2					pF
Dynamic Characteristics									
Turn-On Time[e]	t_{ON}	R_L = 300 Ω, C_L = 35 pF V_S = 3 V, see figure 1	Room Full	33		60 100		60 90	ns
Turn-Off Time[e]	t_{OFF}		Room Full	16		35 50		35 45	
Break-Before-Make[e] Time Delay	t_{BBM}	DG613A only, V_S = 3 V R_L = 300 Ω, C_L = 35 pF	Room Full	19	2		2		
Charge Injection[e]	Q	V_g = 0 V, R_g = 0 Ω, C_L = 1 nF	Full	2.3					pC
Off Isolation[e]	OIRR	R_L = 50 Ω, C_L = 5 pF f = 10 MHz	Room	- 61					dB
Channel-to-Channel Crosstalk[e]	X_{TALK}		Room	- 90					
3 dB Bandwidth[e]	BW	R_L = 50 Ω, C_L = 5 pF	Room	675					MHz
Source Off Capacitance[e]	$C_{S(off)}$	f = 1 MHz; V_S = 0 V	Room	3					pF
Drain Off Capacitance[e]	$C_{D(off)}$		Room	5					
Drain On Capacitance[e]	$C_{D(on)}$	f = 1 MHz; V_S = V_D = 0 V	Room	9					
Power Supplies									
Power Supply Current	I+	V_{IN} = 0 V or 5 V	Room Full	0.001		0.1 1		0.1 1	µA
Negative Supply Current	I-		Room Full	- 0.001	- 0.1 - 1		- 0.1 - 1		
Ground Current	I_{GND}		Room Full	- 0.001	- 0.1 - 1		- 0.1 - 1		

SPECIFICATIONS FOR UNIPOLAR SUPPLIES (V + = + 3 V, V - = 0 V)									
		Test Conditions Unless Otherwise Specified V+ = + 3 V, V- = 0 V V_{IN} = 1.4 V, 0.6 V[a]			- 40 °C to 125 °C		- 40 °C to 85 °C		
Parameter	Symbol		Temp.[b]	Typ.[c]	Min.[d]	Max.[d]	Min.[d]	Max.[d]	Unit
Analog Switch									
Analog Signal Range[e]	V_{ANALOG}		Full		0	3	0	3	V
On-Resistance	R_{ON}	I_S = 1 mA, V_D = + 1.5 V	Room Full	195		235 300		235 280	Ω
Switch Off Leakage Current	$I_{S(off)}$	V + = 3.3 V, V- = 0 V V_D = 3 V/0.3 V V_S = 0.3 V/3 V	Room Full	± 0.02	- 0.1 - 2	0.1 2	- 0.1 - 0.25	0.1 0.25	nA
	$I_{D(off)}$		Room Full	± 0.02	- 0.1 - 2	0.1 2	- 0.1 - 0.25	0.1 0.25	
Switch On Leakage Current	$I_{D(on)}$	V + = 3.3 V, V- = 0 V V_D = V_S = 0.3 V/3 V	Room Full	± 0.02	- 0.1 - 6	0.1 6	- 0.1 - 0.25	0.1 0.25	
Digital Control									
Input Current, V_{IN} Low	I_{IL}	V_{IN} Under Test = 0.6 V	Full	0.005	- 0.1	0.1	- 0.1	0.1	µA
Input Current, V_{IN} High	I_{IH}	V_{IN} Under Test = 1.4 V	Full	0.005	- 0.1	0.1	- 0.1	0.1	
Input Capacitance[e]	C_{IN}	f = 1 MHz	Room	2					pF
Dynamic Characteristics									
Turn-On Time	t_{ON}	R_L = 300 Ω, C_L = 35 pF V_S = 2 V, see figure 1	Room Full	87		125 180		125 170	ns
Turn-Off Time	t_{OFF}		Room Full	33		55 65		55 60	
Break-Before-Make Time Delay	t_{BBM}	DG613 only, V_S = 2 V R_L = 300 Ω, C_L = 35 pF	Room Full	60	10		10		
Charge Injection[e]	Q	V_g = 0 V, R_g = 0 Ω, C_L = 1 nF	Room	2.3					pC
Off Isolation[e]	OIRR	R_L = 50 Ω, C_L = 5 pF f = 10 MHz	Room	- 60					dB
Channel-to-Channel Crosstalk[e]	X_{TALK}		Room	- 90					
3 dB Bandwidth[e]	BW	R_L = 50 Ω, C_L = 5 pF	Room	550					MHz
Source Off Capacitance[e]	$C_{S(off)}$	f = 1 MHz; V_S = 0 V	Room	5					pF
Drain Off Capacitance[e]	$C_{D(off)}$		Room	6					
Drain On Capacitance[e]	$C_{D(on)}$	f = 1 MHz; V_S = V_D = 0 V	Room	9					
Power Supplies									
Power Supply Current	I+	V_{IN} = 0 V or 3 V	Room Full	0.001		0.1 1		0.1 1	µA
Negative Supply Current	I-		Room Full	- 0.001	- 0.1 - 1		- 0.1 - 1		
Ground Current	I_{GND}		Room Full	- 0.001	- 0.1 - 1		- 0.1 - 1		

Notes:
a. V_{IN} = input voltage to perform proper function.
b. Room = 25 °C, Full = as determined by the operating temperature suffix.
c. Typical values are for DESIGN AID ONLY, not guaranteed nor subject to production testing.
d. The algebraic convention whereby the most negative value is a minimum and the most positive a maximum, is used in this data sheet.
e. Guaranteed by design, not subject to production test.

Stresses beyond those listed under "Absolute Maximum Ratings" may cause permanent damage to the device. These are stress ratings only, and functional operation of the device at these or any other conditions beyond those indicated in the operational sections of the specifications is not implied. Exposure to absolute maximum rating conditions for extended periods may affect device reliability.

TYPICAL CHARACTERISTICS (25 °C, unless otherwise noted)

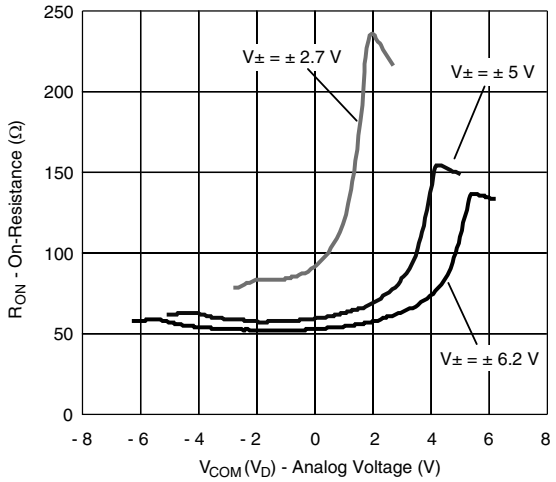

On-Resistance vs. V_D (Dual Supply)

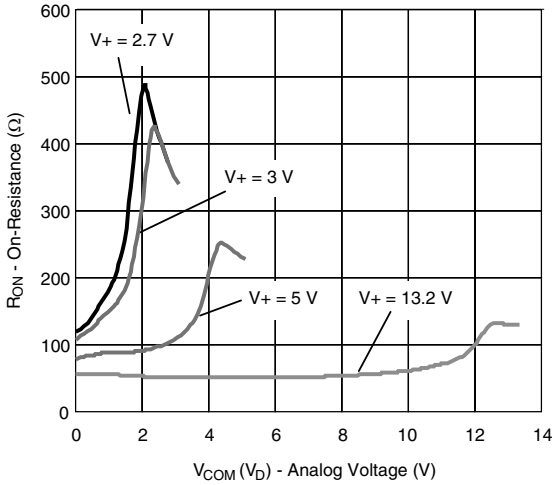

On-Resistance vs. V_D (Single Supply)

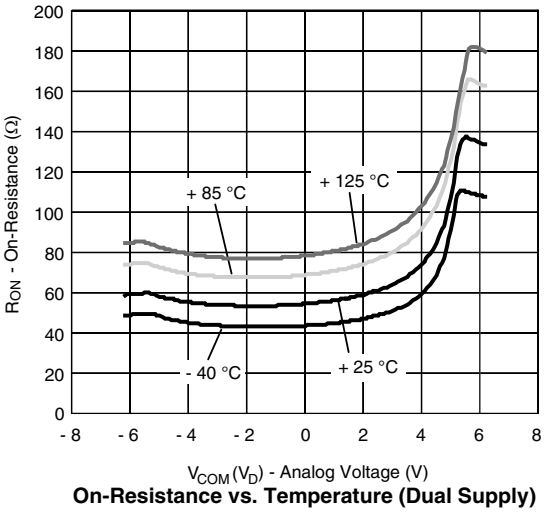

On-Resistance vs. Temperature (Dual Supply)

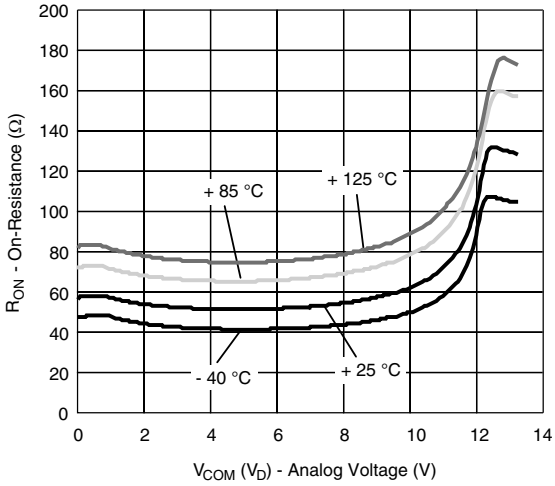

On-Resistance vs. Temperature (Single Supply)

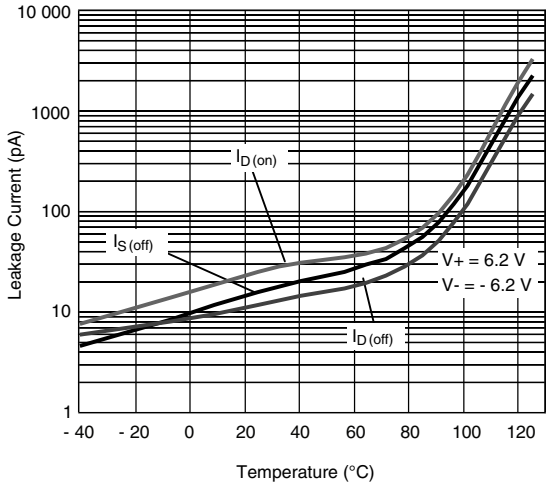

Leakage Current vs. Temperature

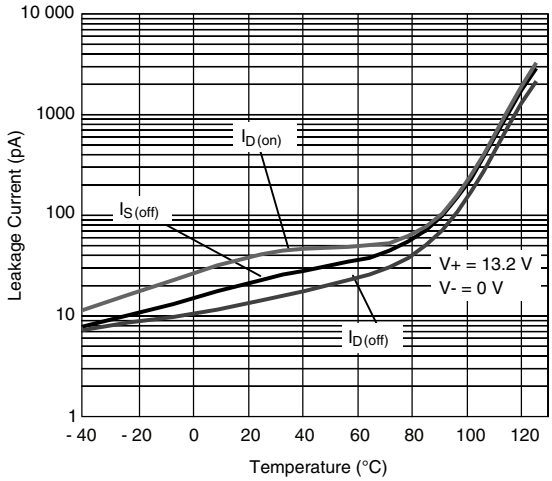

Leakage Current vs. Temperature

TYPICAL CHARACTERISTICS (25 °C, unless otherwise noted)

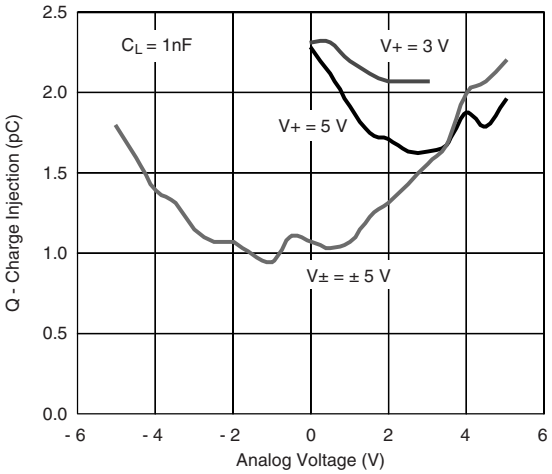

Charge Injection vs. Analog Voltage

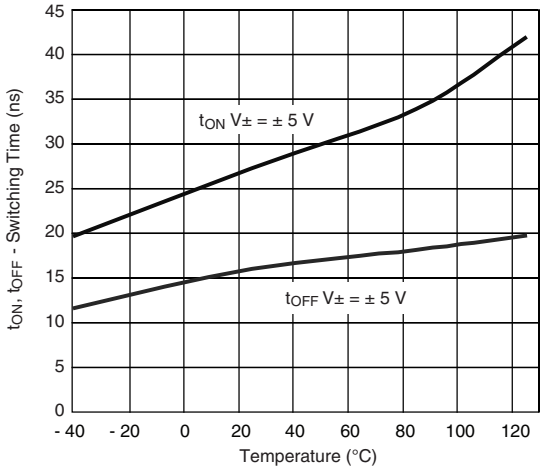

Switching Time vs. Temperature (Dual Supply)

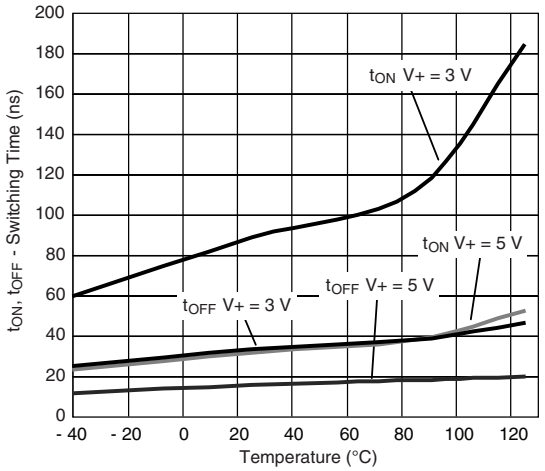

Switching Time vs. Temperature (Single Supply)

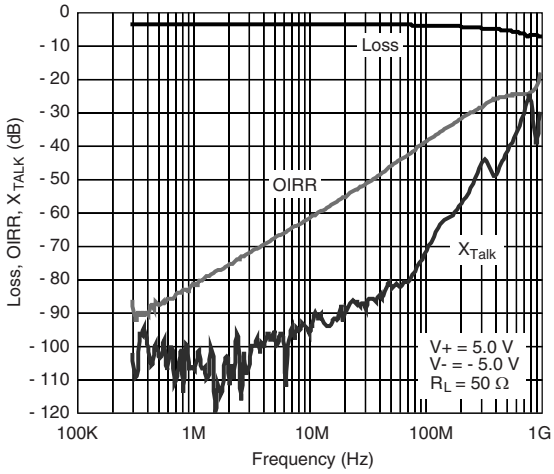

Insertion Loss, Off-Isolation, Crosstalk vs. Frequency

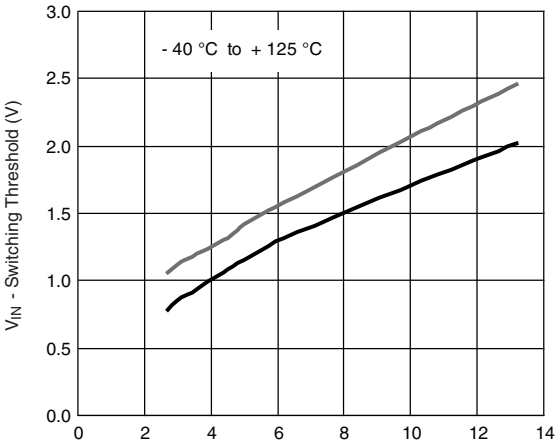

Switching Threshold vs. Supply Voltage

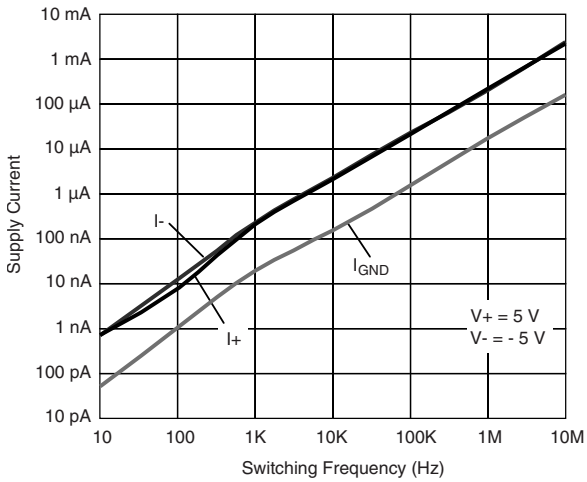

Supply Current vs. Switching Frequency

TEST CIRCUITS

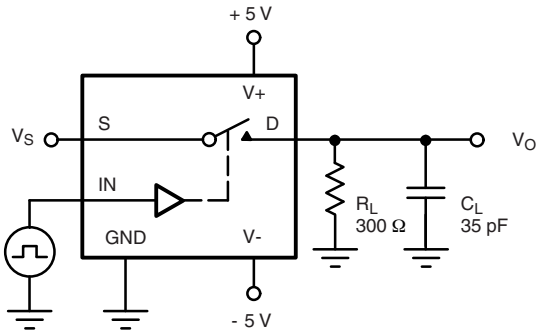

C_L (includes fixture and stray capacitance)

$$V_O = V_S \frac{R_L}{R_L + r_{DS(on)}}$$

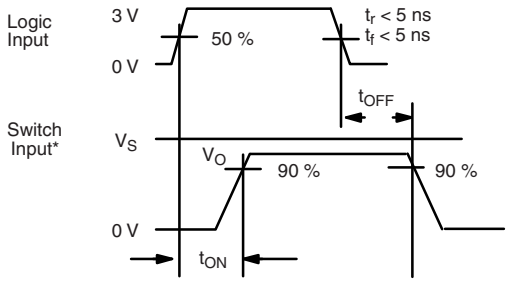

Note: Logic input waveform is inverted for switches that have the opposite logic sense control

Figure 1. Switching Time

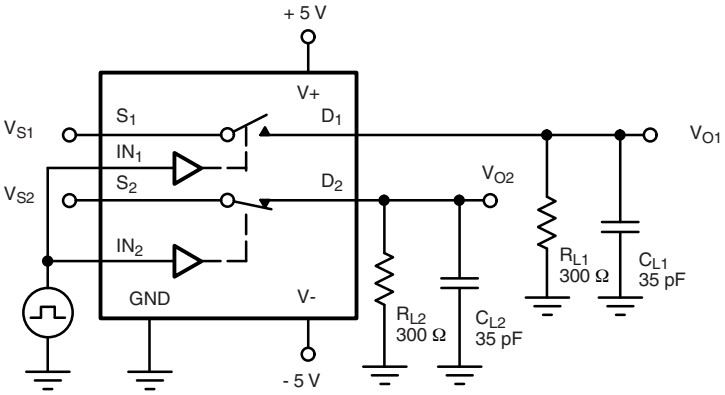

C_L (includes fixture and stray capacitance)

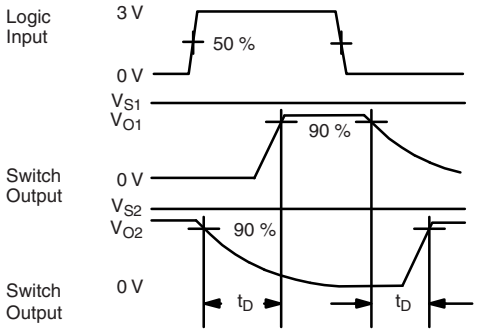

Figure 2. Break-Before-Make (DG613A)

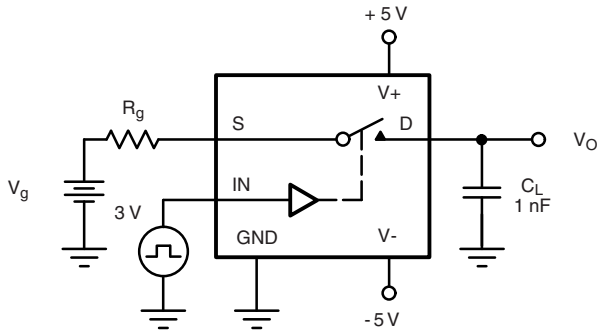

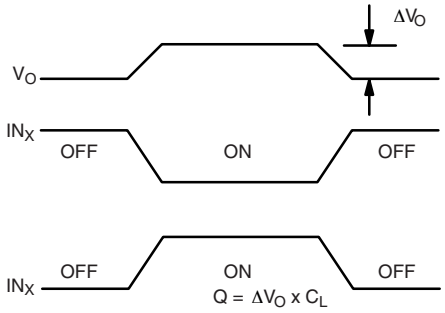

Figure 3. Charge Injection

TEST CIRCUITS

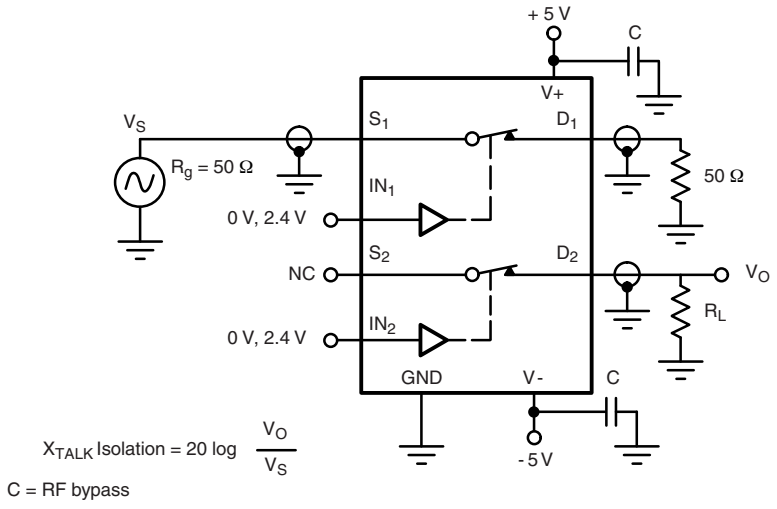

Figure 4. Crosstalk

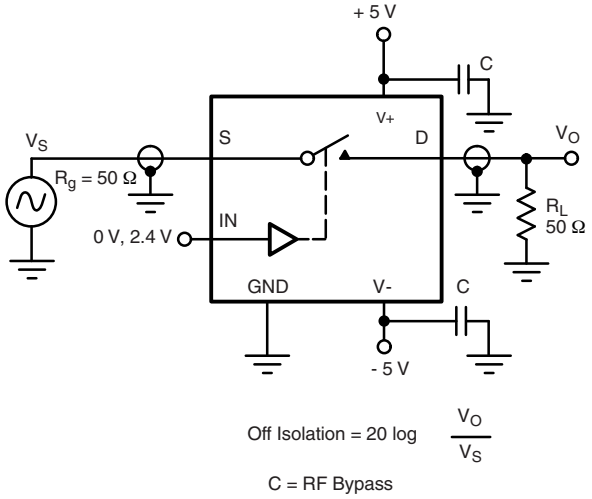

Figure 5. Off-Isolation

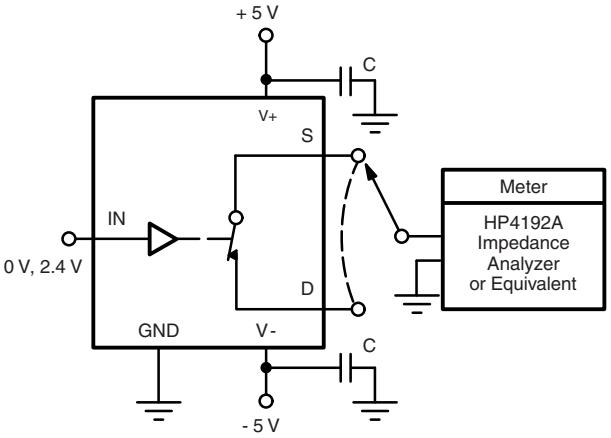

Figure 6. Source/Drain Capacitances

Vishay Siliconix maintains worldwide manufacturing capability. Products may be manufactured at one of several qualified locations. Reliability data for Silicon Technology and Package Reliability represent a composite of all qualified locations. For related documents such as package/tape drawings, part marking, and reliability data, see www.vishay.com/ppg?69904.

SOIC (NARROW): 16-LEAD

JEDEC Part Number: MS-012

Dim	MILLIMETERS		INCHES	
	Min	Max	Min	Max
A	1.35	1.75	0.053	0.069
A_1	0.10	0.20	0.004	0.008
B	0.38	0.51	0.015	0.020
C	0.18	0.23	0.007	0.009
D	9.80	10.00	0.385	0.393
E	3.80	4.00	0.149	0.157
e	1.27 BSC		0.050 BSC	
H	5.80	6.20	0.228	0.244
L	0.50	0.93	0.020	0.037
⊘	0°	8°	0°	8°

ECN: S-03946—Rev. F, 09-Jul-01
DWG: 5300

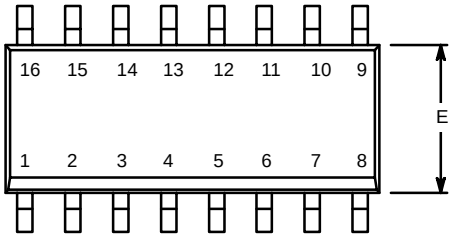

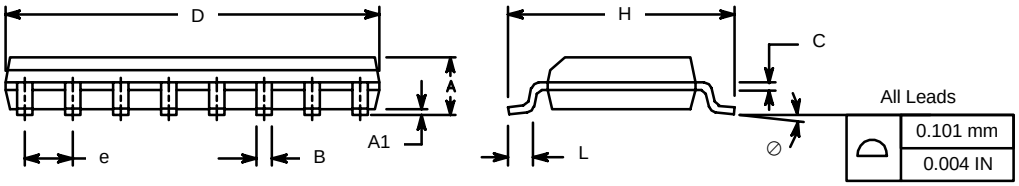

MINI QFN-16L

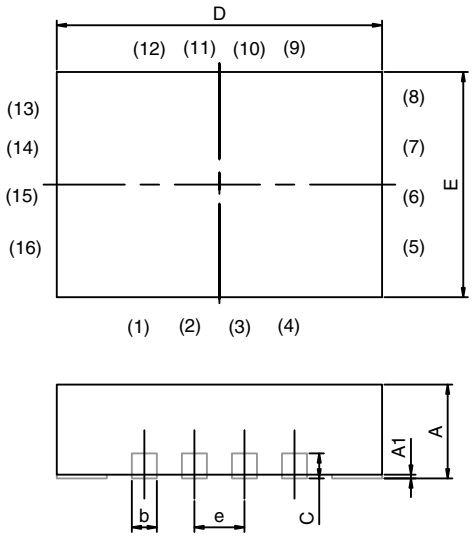

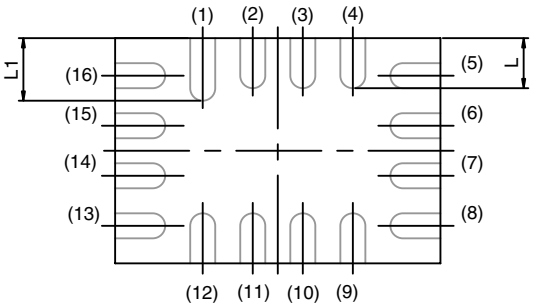

BACK SIDE VIEW

DIM	MILLIMETERS			INCHES		
	MIN.	NAM	MAX.	MIN.	NAM	MAX.
A	0.70	0.75	0.80	0.0275	0.0295	0.0315
A1	0	-	0.05	0	-	0.002
b	0.15	0.20	0.25	0.0059	0.0078	0.0098
C	0.15	0.20	0.25	0.0059	0.0078	0.0098
D	2.60 BSC			0.1023 BSC		
E	1.80 BSC			0.0708 BSC		
e	0.40 BSC			0.0157 BSC		
L	0.35	0.40	0.45	0.0137	0.0157	0.0177
L1	0.45	0.50	0.55	0.0177	0.0196	0.0216

ECN T-06380-Rev. A, 14-Aug-06
DWG: 5954

TSSOP: 16-LEAD

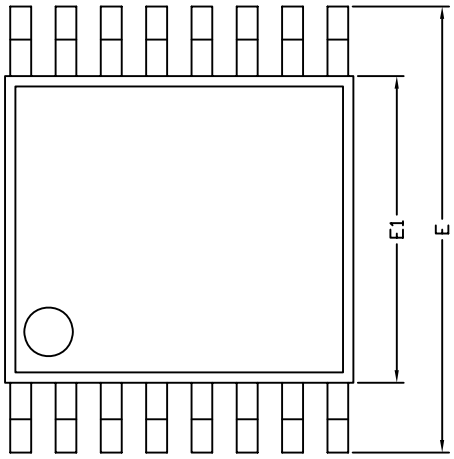

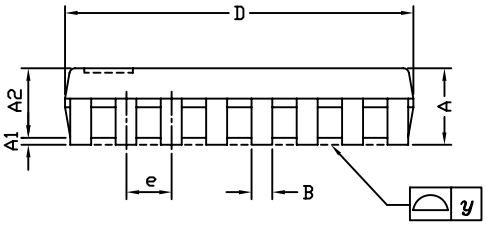

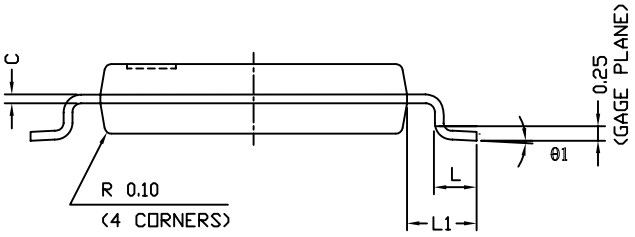

Symbols	DIMENSIONS IN MILLIMETERS		
	Min	Nom	Max
A	-	1.10	1.20
A1	0.05	0.10	0.15
A2	-	1.00	1.05
B	0.22	0.28	0.38
C	-	0.127	-
D	4.90	5.00	5.10
E	6.10	6.40	6.70
E1	4.30	4.40	4.50
e	-	0.65	-
L	0.50	0.60	0.70
L1	0.90	1.00	1.10
y	-	-	0.10
θ1	0°	3°	6°
ECN: S-61920-Rev. D, 23-Oct-06 DWG: 5624			

RECOMMENDED MINIMUM PADS FOR SO-16

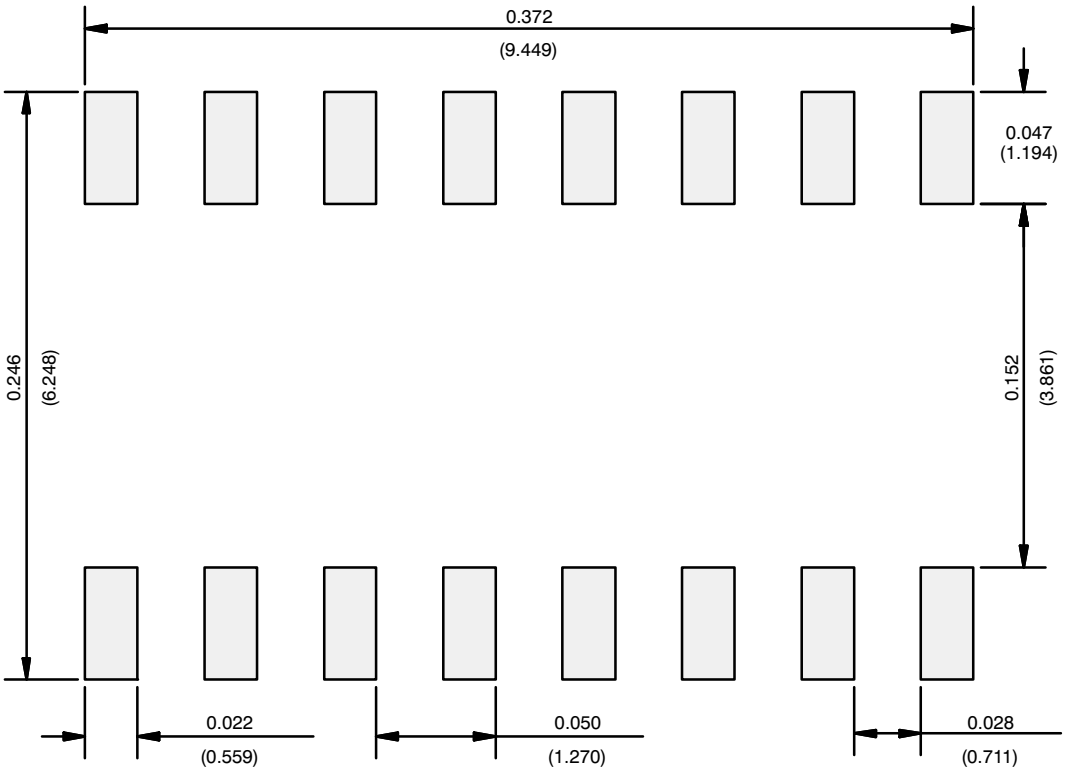

Recommended Minimum Pads
Dimensions in Inches/(mm)

Return to Index

Disclaimer

ALL PRODUCT, PRODUCT SPECIFICATIONS AND DATA ARE SUBJECT TO CHANGE WITHOUT NOTICE TO IMPROVE RELIABILITY, FUNCTION OR DESIGN OR OTHERWISE.

Vishay Intertechnology, Inc., its affiliates, agents, and employees, and all persons acting on its or their behalf (collectively, "Vishay"), disclaim any and all liability for any errors, inaccuracies or incompleteness contained in any datasheet or in any other disclosure relating to any product.

Vishay makes no warranty, representation or guarantee regarding the suitability of the products for any particular purpose or the continuing production of any product. To the maximum extent permitted by applicable law, Vishay disclaims (i) any and all liability arising out of the application or use of any product, (ii) any and all liability, including without limitation special, consequential or incidental damages, and (iii) any and all implied warranties, including warranties of fitness for particular purpose, non-infringement and merchantability.

Statements regarding the suitability of products for certain types of applications are based on Vishay's knowledge of typical requirements that are often placed on Vishay products in generic applications. Such statements are not binding statements about the suitability of products for a particular application. It is the customer's responsibility to validate that a particular product with the properties described in the product specification is suitable for use in a particular application. Parameters provided in datasheets and/or specifications may vary in different applications and performance may vary over time. All operating parameters, including typical parameters, must be validated for each customer application by the customer's technical experts. Product specifications do not expand or otherwise modify Vishay's terms and conditions of purchase, including but not limited to the warranty expressed therein.

Except as expressly indicated in writing, Vishay products are not designed for use in medical, life-saving, or life-sustaining applications or for any other application in which the failure of the Vishay product could result in personal injury or death. Customers using or selling Vishay products not expressly indicated for use in such applications do so at their own risk and agree to fully indemnify and hold Vishay and its distributors harmless from and against any and all claims, liabilities, expenses and damages arising or resulting in connection with such use or sale, including attorneys fees, even if such claim alleges that Vishay or its distributor was negligent regarding the design or manufacture of the part. Please contact authorized Vishay personnel to obtain written terms and conditions regarding products designed for such applications.

No license, express or implied, by estoppel or otherwise, to any intellectual property rights is granted by this document or by any conduct of Vishay. Product names and markings noted herein may be trademarks of their respective owners.