3A, Full Featured DC/DC Converter with Soft-Start and Inrush Current Protection

FEATURES

- **Wide Input Voltage Range: 2.5V to 24V**
- **3A, 42V Internal Switch**
- **High Efficiency Power Conversion: Up to 89%**
- **Soft-Start**
- Frequency Set by External Resistor: 200kHz to 3.5MHz
- Protection Against Input Short Circuits and Hot Plugging
- Low V_{CESAT} Switch: 0.3V at 2.5A (Typical)
- Capable of Positive and Negative Outputs
- Available in Thermally Enhanced 14-Lead (4mm × 3mm) DFN and 16-Lead TSSOP Packages

APPLICATIONS

- High Power LED Driver
- DSL Modems
- Distributed Power

DESCRIPTION

The LT®3479 is a current mode, fixed frequency step-up DC/DC converter with an internal 3A, 42V switch. Efficiencies of up to 89% can be achieved in typical applications. It features a programmable soft-start function to limit inductor current during start-up and inrush current protection to protect the LT3479 during shorts and line transients. Both inputs of the error amplifier are available to the user allowing positive and negative output voltages. Through an external resistor, the user can program the switching frequency from 200kHz to 3.5MHz. The low profile (0.75mm) 14-pin, 4mm × 3mm DFN package provides excellent thermal performance in a small footprint. The LT3479 is also available in a thermally enhanced 16-pin TSSOP package.

, LT, LTC and LTM are registered trademarks of Linear Technology Corporation.
All other trademarks are the property of their respective owners.

TYPICAL APPLICATION

5V to 12V Boost Converter

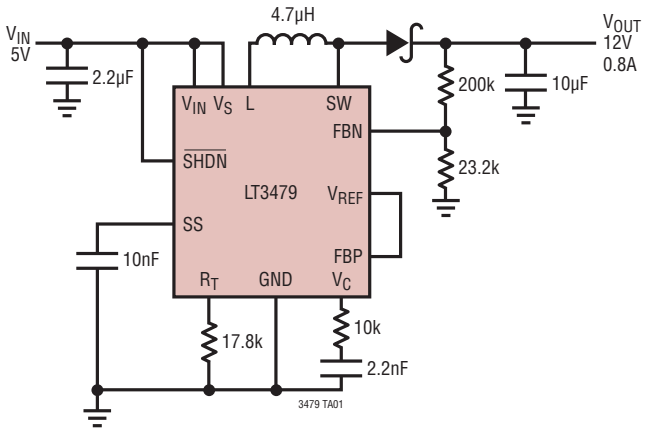

5V to 12V Efficiency

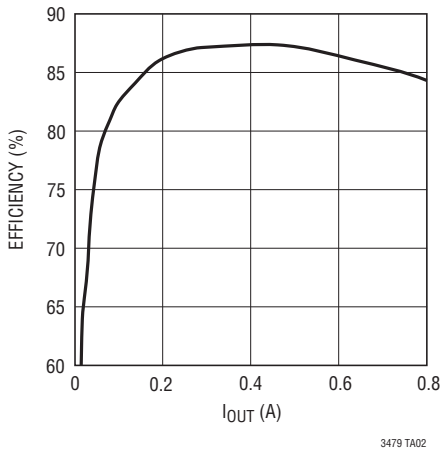

ABSOLUTE MAXIMUM RATINGS (Note 1)

SW, L, V_S Voltages 42V
V_{IN}, $\overline{SHDN}$ Voltages 24V
FBP, FBN, V_{REF}, R_T, V_C Voltages 2V
Junction Temperature ..... 125°C

Operating Temperature Range (Note 2).... –40°C to 85°C
Storage Temperature Range..... –65°C to 125°C
Lead Temperature (Soldering, 10 sec)
TSSOP ..... 300°C

PIN CONFIGURATION

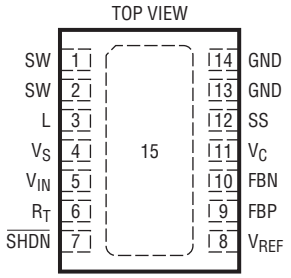

DE14 PACKAGE
14-LEAD (4mm × 3mm) PLASTIC DFN
T_{JMAX} = 125°C, θ_{JA} = 43°C/W
EXPOSED PAD (PIN 15) IS PGND (MUST BE SOLDERED TO PCB)

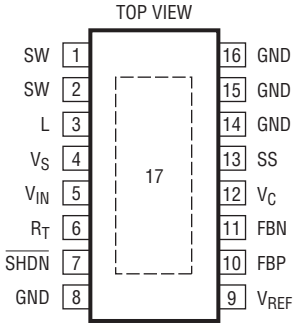

FE PACKAGE
16-LEAD PLASTIC TSSOP
T_{JMAX} = 125°C, θ_{JA} = 38°C/W
EXPOSED PAD (PIN 17) IS PGND (MUST BE SOLDERED TO PCB)

ORDER INFORMATION

LEAD FREE FINISH	TAPE AND REEL	PART MARKING	PACKAGE DESCRIPTION	TEMPERATURE RANGE
LT3479EDE#PBF	LT3479EDE#TRPBF	3479	14-Lead (4mm × 3mm) Plastic DFN	–40°C to 85°C
LT3479EFE#PBF	LTC4263IDE#TRPBF	3479EFE	16-Lead Plastic TSSOP	–40°C to 85°C
LEAD BASED FINISH	**TAPE AND REEL**	**PART MARKING**	**PACKAGE DESCRIPTION**	**TEMPERATURE RANGE**
LT3479EDE	LT3479EDE#TR	3479	14-Lead (4mm × 3mm) Plastic DFN	–40°C to 85°C
LT3479EFE	LT3479EFE#TR	3479EFE	16-Lead Plastic TSSOP	–40°C to 85°C

Consult LTC Marketing for parts specified with wider operating temperature ranges.

For more information on lead free part marking, go to: http://www.linear.com/leadfree/
For more information on tape and reel specifications, go to: http://www.linear.com/tapeandreel/

ELECTRICAL CHARACTERISTICS

The ● denotes the specifications which apply over the full operating temperature range, otherwise specifications are at T_A = 25°C. V_{IN} = 2.5V, $V_{\overline{SHDN}}$ = 2.5V.

PARAMETER	CONDITIONS		MIN	TYP	MAX	UNITS
Minimum Input Voltage		●		2.3	2.5	V
Quiescent Current	V_{IN} = 2.5V, $V_{\overline{SHDN}}$ = 0V V_{IN} = 2.5V, $V_{\overline{SHDN}}$ = 2.5V, V_C = 0.3V (Not Switching)			0.1 5	1 7.5	µA mA
Reference Voltage	Measured at V_{REF} Pin	●	1.216	1.235	1.250	V
Reference Voltage Line Regulation	2.5V < V_{IN} < 24V, V_C = 0.3V			0.01	0.03	%/V
Maximum V_{REF} Pin Current	Out of Pin				100	µA
Soft-Start Pin Current	SS = 0.5V, Out of Pin			9		µA
FBP Pin Bias Current				25	100	nA
FBN Pin Bias Current				25	100	nA
Feedback Amplifier Offset Voltage	FBP – FBN, V_C = 1V		–2	2	6	mV
Feedback Amplifier Voltage Gain				250		V/V
Feedback Amplifier Transconductance				150		µS
Feedback Amplifier Sink Current	V_{FBP} = 1.25V, V_{FBN} = 1.5V, V_C = 0.5V			10		µA
Feedback Amplifier Source Current	V_{FBP} = 1.25V, V_{FBN} = 1V, V_C = 0.5V			10		µA
Switching Frequency	R_T = 17.8k R_T = 113k R_T = 1.78k		0.9 160 2.7	1 200 3.5	1.15 240 4.1	MHz kHz MHz
Maximum Switch Duty Cycle	R_T = 17.8k	●	84	93		%
$\overline{SHDN}$ Pin Current	$V_{\overline{SHDN}}$ = 5V $V_{\overline{SHDN}}$ = 0V			30 0.1	60 1	µA µA
$\overline{SHDN}$ Pin Threshold			0.3	1.5	2	V
Inductor Current Limit	(Note 3)		3.5	5	6.5	A
Switch Current Limit	(Note 3)		3	4.5	6	A
Switch V_{CESAT}	I_{SW} = 1A (Note 3)			120	200	mV
Switch Leakage Current	SW = 40V			0.2	5	µA

Note 1: Stresses beyond those listed under Absolute Maximum Ratings may cause permanent damage to the device. Exposure to any Absolute Maximum Rating condition for extended periods may affect device reliability and lifetime.

Note 2: The LT3479 is guaranteed to meet performance specifications from 0°C to 70°C. Specifications over the –40°C to 85°C operating temperature range are assured by design, characterization and correlation with statistical process controls.

Note 3: Inductor Current Limit, Switch Current Limit and Switch V_{CESAT} for DE package guaranteed by design and/or correlation to static test.

TYPICAL PERFORMANCE CHARACTERISTICS

Switch $V_{CE(SAT)}$

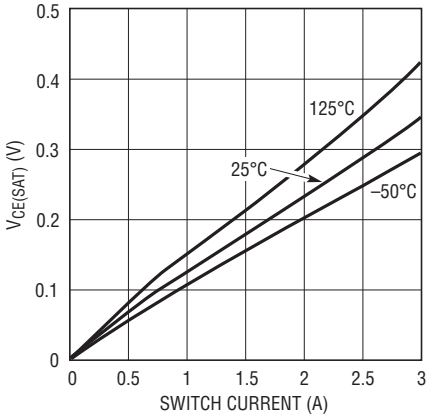

Inductor and Switch Current Limit

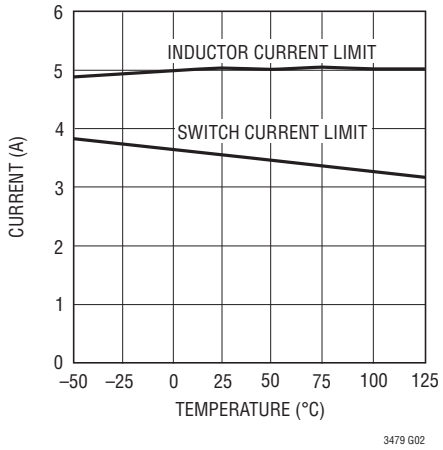

V_{REF}

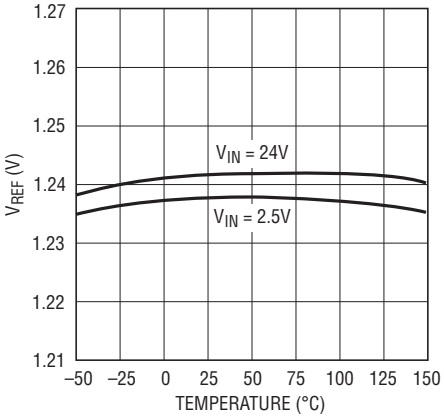

$\overline{SHDN}$ Pin Turn-On Threshold

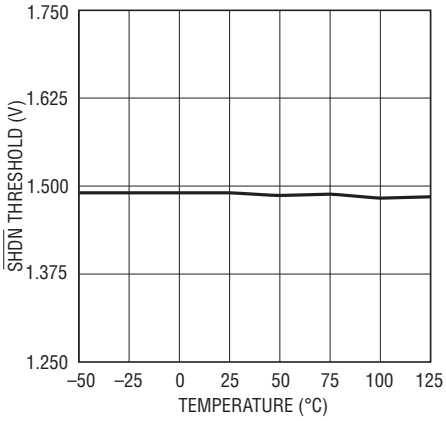

$\overline{SHDN}$ Pin Current

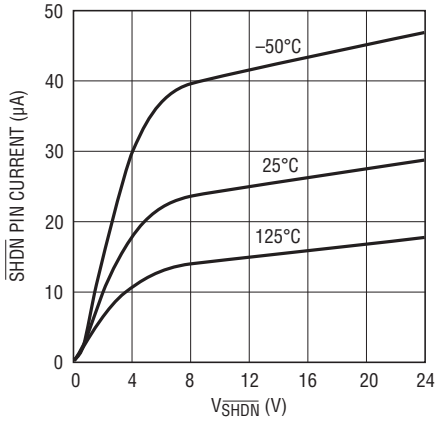

V_{IN} Pin Current

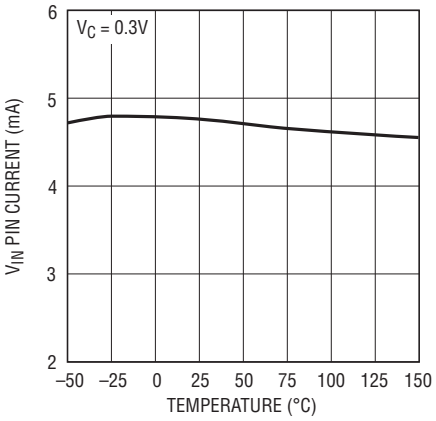

Soft-Start Pin Current

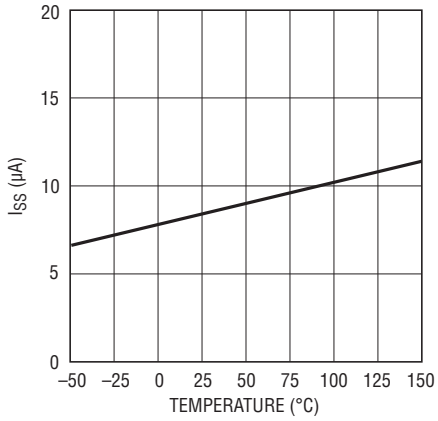

Oscillator Frequency

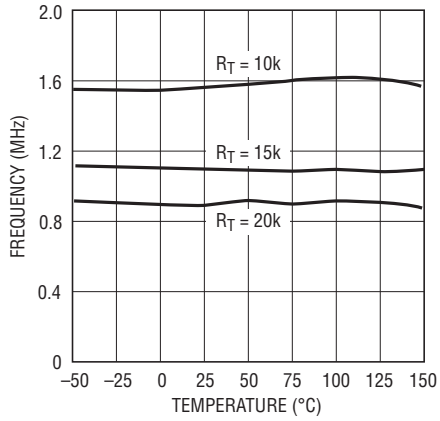

Feedback Amplifier Offset Voltage

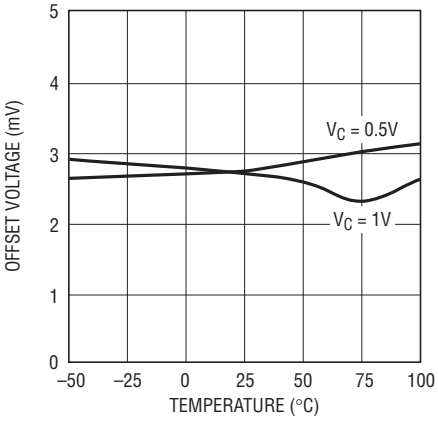

PIN FUNCTIONS (DFN/TSSOP)

SW (Pins 1, 2/Pins 1, 2): Switch Pins. Collector of the internal NPN power switch. Connect the inductor and diode here and minimize the metal trace area connected to this pin to minimize electromagnetic interference.

L (Pin 3/Pin 3): Inductor Pin. Connect the inductor to this pin.

V_S (Pin 4/Pin 4): Inductor Supply. Must be locally bypassed. Powers the switch and the inductor. In case only one supply voltage is available, tie V_{IN} and V_S together.

V_{IN} (Pin 5/Pin 5): Input Supply. Must be locally bypassed. Powers the internal control circuitry.

R_T (Pin 6/Pin 6): Timing Resistor Pin. Adjusts the switching frequency. Do not leave this pin open. See Table 4 for R_T values and switching frequencies.

$\overline{SHDN}$ (Pin 7/Pin 7): Shutdown. Tie to 1.5V or greater to enable the device. Tie below 0.3V to turn off the device.

V_{REF} (Pin 8/Pin 9): Bandgap Voltage Reference. Internally set to 1.235V. Connect this pin to FBP if generating a positive output, or to an external resistor divider if generating a negative voltage. This pin can provide up to 100µA of current and can be locally bypassed with a 100pF capacitor.

FBP (Pin 9/Pin 10): The Noninverting Input to the Error Amplifier. Connect resistive divider tap here for negative output voltage.

FBN (Pin 10/Pin 11): The Inverting Input to the Error Amplifier. Connect resistive divider tap here for positive output voltage.

V_C (Pin 11/Pin 12): Compensation Pin for Error Amplifier. Connect a series RC from this pin to GND. Typical values are 10kΩ and 2.2nF.

SS (Pin 12/Pin 13): Soft-Start. Place a soft-start capacitor here. Leave floating if not in use.

GND (Pins 13, 14/Pins 8, 14, 15, 16): Ground. Tie directly to local ground plane.

Exposed Pad (Pin 15/Pin 17): Power Ground. Must be connected to electrical PCB ground.

BLOCK DIAGRAM

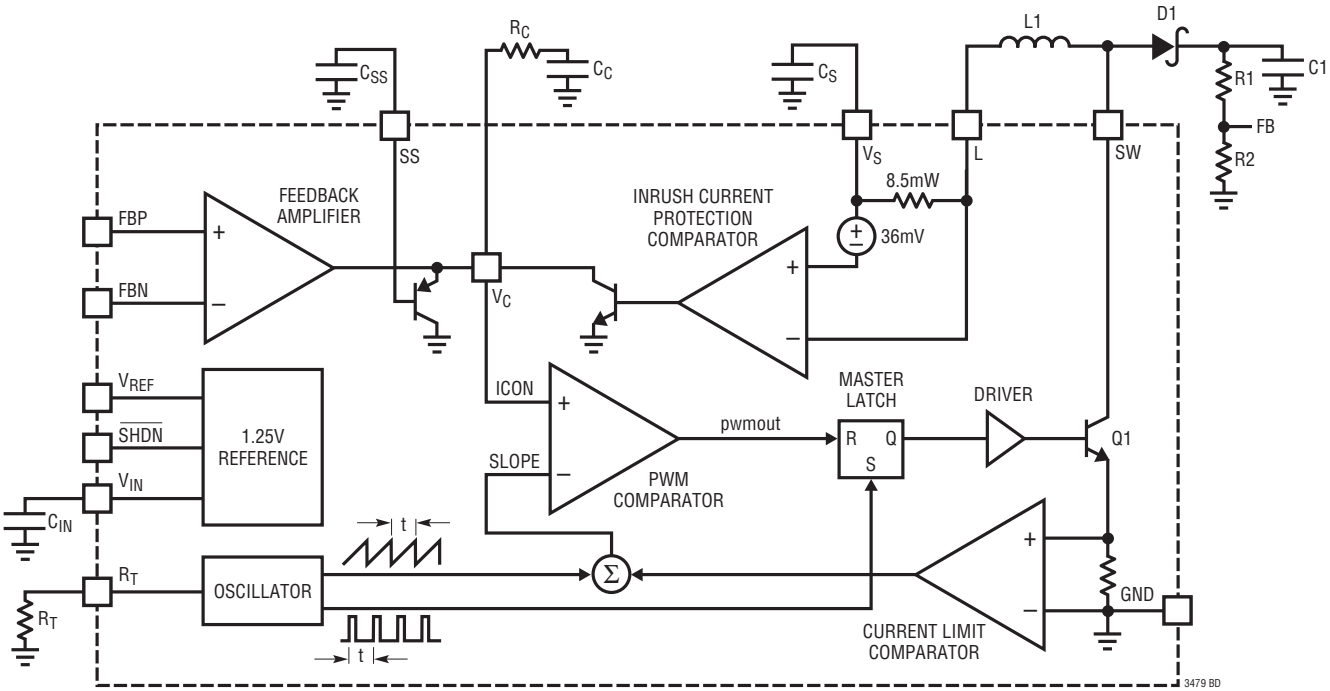

OPERATION

The LT3479 uses a fixed frequency, current mode control scheme to provide excellent line and load regulation. Operation can be best understood by referring to the Block Diagram. The start of each oscillator cycle sets the SR latch and turns on power switch Q1. The signal at the inverting input of the PWM comparator (SLOPE) is proportional to the sum of the switch current and oscillator ramp. When SLOPE exceeds V_C (the output of the feedback amplifier), the PWM comparator resets the latch and turns off the power switch. In this manner, the feedback amplifier and PWM comparators set the correct peak current level to keep the output in regulation.

The LT3479 also features a soft-start function. During start-up, 10µA of current charges the external soft-start capacitor. The SS pin directly limits the rate of voltage rise on the V_C pin, which in turn limits the peak switch current. The switch current is constantly monitored and not allowed to exceed the nominal value of 3A. If the switch current reaches 3A, the SR latch is reset regardless of the output of the PWM comparator. Current limit protects the power switch and external components.

Soft-start plays an important role in applications where the switch will reach levels of 30V or higher. During startup, an overshoot in the switch current together with the presence of high switch voltage can overstress the switch. A properly used soft-start feature will greatly improve the robustness of such designs.

In addition to soft-start, inrush current protection protects the LT3479 against shorts and line transients. During such faults, the inductor current can momentarily exceed 3A and damage the switch. Through an internal 8.5mΩ resistor placed in series with the inductor, the inrush current protection comparator measures the inductor current. If it exceeds 5A, a soft-start cycle is initiated. The LT3479 will remain in the soft-start condition until the fault has passed.

APPLICATIONS INFORMATION

Capacitor Selection

Low ESR (equivalent series resistance) ceramic capacitors should be used at the output to minimize the output ripple voltage. Use only X5R or X7R dielectrics, as these materials retain their capacitance over wider voltage and temperature ranges better than other dielectrics. A 4.7µF to 10µF output capacitor is sufficient for most high output current designs. Converters with lower output currents may need only a 1µF or 2.2µF output capacitor.

Table 1. Ceramic Capacitor Manufacturers

MANUFACTURER	PHONE	WEB
Taiyo Yuden	(408) 573-4150	www.t-yuden.com
AVX	(803) 448-9411	www.avxcorp.com
Murata	(714) 852-2001	www.murata.com

Inductor Selection

Several inductors that work well with the LT3479 are listed in Table 2. However, there are many other manufacturers and devices that can be used. Consult each manufacturer for more detailed information and their entire range of parts. Ferrite core inductors should be used to obtain the best efficiency. Choose an inductor that can handle the necessary peak current without saturating, and ensure that the inductor has a low DCR (copper-wire resistance) to minimize I^2R power losses. A 4.7µH or 10µH inductor will suffice for most LT3479 applications.

Inductor manufacturers specify the maximum current rating as the current where the inductance falls to some percentage of its nominal value—typically 65%. An inductor can pass a current larger than its rated value without damaging it. Aggressive designs where board space is precious will exceed the maximum current rating of the inductor to save board space. Consult each manufacturer to determine how the maximum inductor current is measured and how much more current the inductor can reliably conduct.

Physically larger inductors provide better efficiency than smaller ones. Figure 1 shows a 3% to 4% efficiency gain in using a larger inductor in a 1MHz, 5V to 12V application. The efficiency of the TOKO FDV0630-4R7M, which measures 7mm × 7.7mm and 3 mm thick, peaks at 87%. The smaller Sumida CDRH4D28-4R7 which is 5mm × 5mm and 3mm thick yields a peak efficiency of 85% in an identical application. Thus, if board space is abundant, then larger inductors should be used to maximize efficiency.

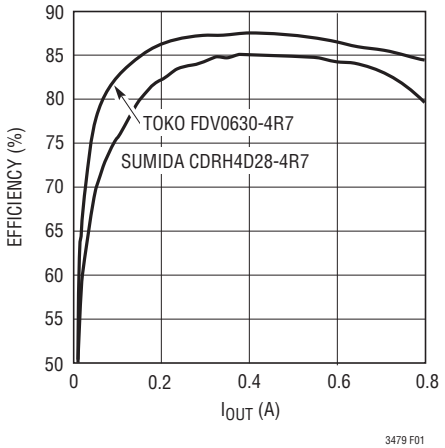

Figure 1. Efficiency vs Inductor Size

Table 2. Suggested Inductors

MANUFACTURER PART NUMBER	I_{DC} (A)	INDUCTANCE (µH)	MAX DCR (mΩ)	L × W × H (mm)	MANUFACTURER
CDRH6D283R0 CDRH6D28100 CDRH4D284R7	3 1.7 1.32	3 10 4.7	24 65 72	6.7 × 6.7 × 3.0 6.7 × 6.7 × 3.0 5.0 × 5.0 × 3.0	Sumida www.sumida.com
LM N 05D B4R7M LM N 05D B100K	2.2 1.6	4.7 10	49 10	5.9 × 6.1 × 2.8 5.9 × 6.1 × 2.8	Taiyo Yuden www.t-yuden.com
LQH55DN4R7M01L LQH55DN100M01K	2.7 1.7	4.7 10	57 130	5.7 × 5.0 × 4.7 5.7 × 5.0 × 4.7	Murata www.murata.com
FDV0630-4R7M	4.2	4.7	49	7.0 × 7.7 × 3.0	Toko www.toko.com

APPLICATIONS INFORMATION

Diode Selection

Schottky diodes, with their low forward voltage drop and fast switching speed, are ideal for LT3479 applications. Table 3 lists several Schottky diodes that work well with the LT3479. The diode's average current rating must exceed the average output current. The diode's maximum reverse voltage must exceed the output voltage. The diode conducts current only when the power switch is turned off (typically less than 50% duty cycle), so a 3A diode is sufficient for most designs. The companies below also offer Schottky diodes with high voltage and current ratings.

Table 3. Suggested Diodes

MANUFACTURER PART NUMBER	MAX CURRENT (A)	MAX REVERSE VOLTAGE (V)	MANUFACTURER
UPS340	3	40	Microsemi
UPS315	3	15	www.microsemi.com
B220	2	20	Diodes, Inc
B230	2	30	www.diodes.com
B240	2	40	
B320	3	20	
B330	3	30	
B340	3	40	
SBM340	3	40	

Setting Positive Output Voltages

To set a positive output voltage, select the values of R1 and R2 (see Figure 2) according to the following equation:

$$V_{OUT} = 1.235V\left(1+\frac{R1}{R2}\right)$$

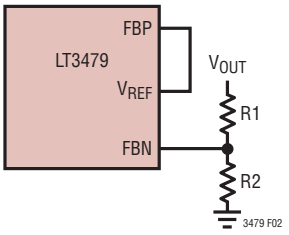

Figure 2. Positive Output Voltage Feedback Connections

Setting Negative Output Voltages

To set a negative output voltage, select the values of R3 and R4 (see Figure 3) according to the following equation:

$$V_{OUT} = -1.235V\left(\frac{R3}{R4}\right)$$

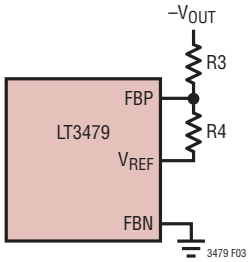

Figure 3. Negative Output Voltage Feedback Connections

Board Layout

As with all switching regulators, careful attention must be paid to the PCB board layout and component placement. To maximize efficiency, switch rise and fall times are made as short as possible. To prevent radiation and high frequency resonance problems, proper layout of the high frequency switching path is essential. Minimize the length and area of all traces connected to the SW pin and always use a ground plane under the switching regulator to minimize interplane coupling. The signal path including the switch, output diode D1 and output capacitor C_{OUT}, contains nanosecond rise and fall times and should be kept as short as possible. Recommended component placement is shown in Figure 4.

Soft-Start

For many applications, it is necessary to minimize the inrush current at start-up. The built-in soft-start circuit significantly reduces the start-up current spike and output voltage overshoot. A typical value is 10nF for 1.65ms. Figure 5 shows the start-up output voltage and inductor current waveforms in a typical application without a soft-start capacitor. Notice the output voltage overshoot and the large initial current. The addition of a 22nF capacitor eliminates the output overshoot and reduces the peak inductor current (Figure 6).

APPLICATIONS INFORMATION

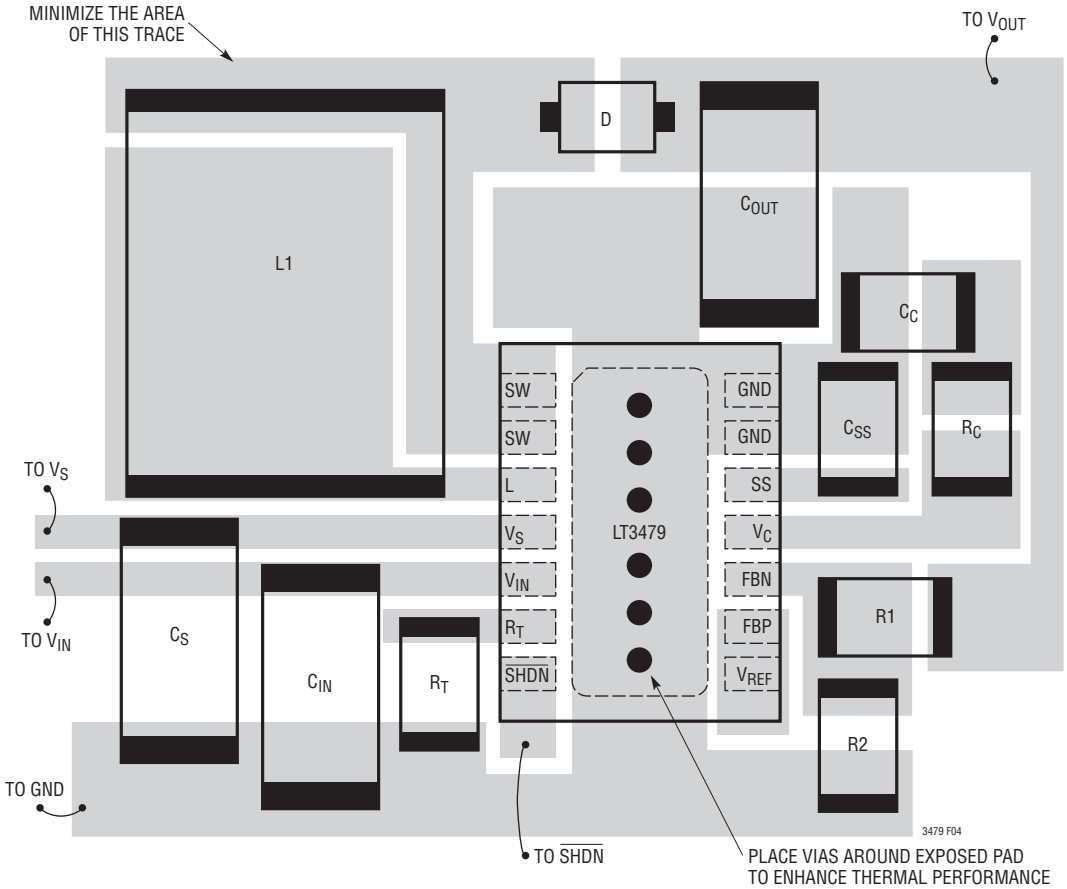

Figure 4. Suggested Board Layout

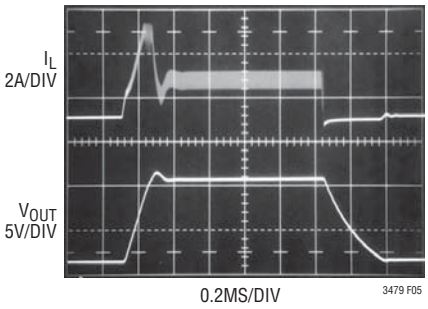

Figure 5. Start-Up with No Soft-Start Capacitor

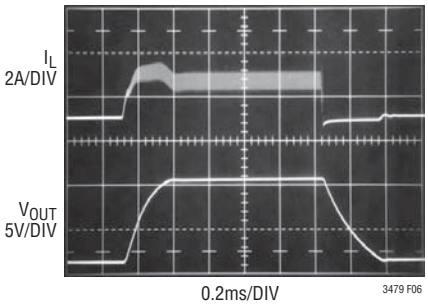

Figure 6. Start-Up with C_{SS} = 22nF

Switching Frequency

The switching frequency of the LT3479 is set by an external resistor attached to the R_T pin. Do not leave this pin open. A resistor must always be connected for proper operation. See Table 4 and Figure 7 for resistor values and corresponding frequencies.

Table 4. Switching Frequency

SWITCHING FREQUENCY (MHz)	R_T (kΩ)
3.5	1.78
3	2.87
2.5	4.32
2	6.49
1.5	10.2
1	17.8
0.5	39.2
0.2	113

APPLICATIONS INFORMATION

Increasing switching frequency reduces output voltage ripple but also reduces efficiency. The user should set the frequency for the maximum tolerable output voltage ripple. Figure 8 shows a reduction in efficiency of about 4% between 1MHz and 2MHz operation in a typical application.

Inrush Current Protection

The LT3479 features a novel inductor current sensing circuit that protects the LT3479 during hot plugging and short circuits. An internal resistor in series with the external inductor senses the inductor current at all times. When it exceeds 5A, a soft-start cycle is initiated. Figure 9 shows an output overload with inrush current protection disabled. Notice that soft-start remains high, and that the inductor current does not return to zero. Figure 10 illustrates the benefits of inrush current protection. The output short initiates a new soft start cycle reducing the inductor current. After the fault has passed, the inductor current slowly returns to its equilibrium value. To ensure bond wire integrity, the inductor current should not exceed 8A for more than 10ms.

Bypassing the 8.5mΩ inductor current sense resistor disables inrush current protection. Connect the inductor supply trace and bypass capacitor to the L pin and leave the V_S pin open to disable this feature.

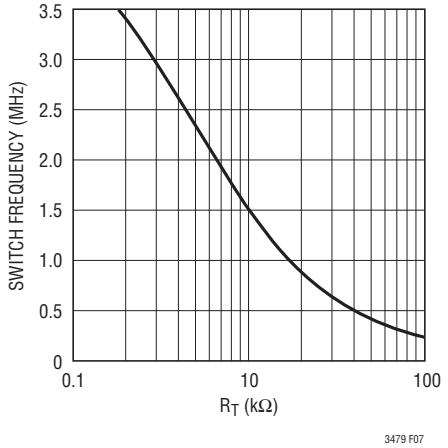

Figure 7. Switching Frequency

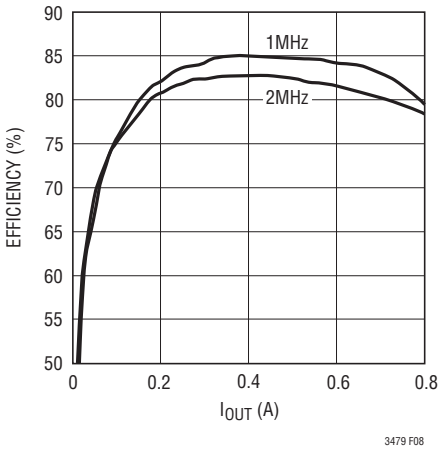

Figure 8. Efficiency vs Switching Frequency

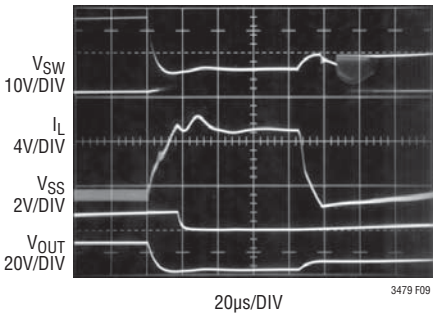

Figure 9. Output Overload with Inrush Current Protection Enabled

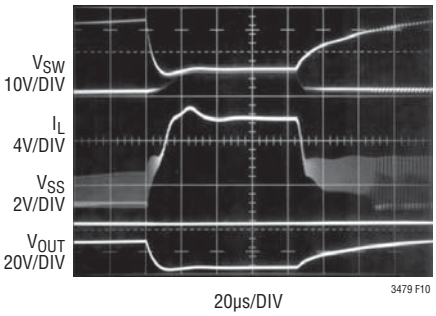

Figure 10. Output Overload with Inrush Current Protection Disabled

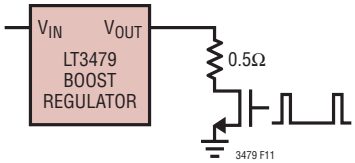

Figure 11. Circuit for Output Overload

TYPICAL APPLICATIONS

5V to 12V/800mA 1MHz Boost Converter

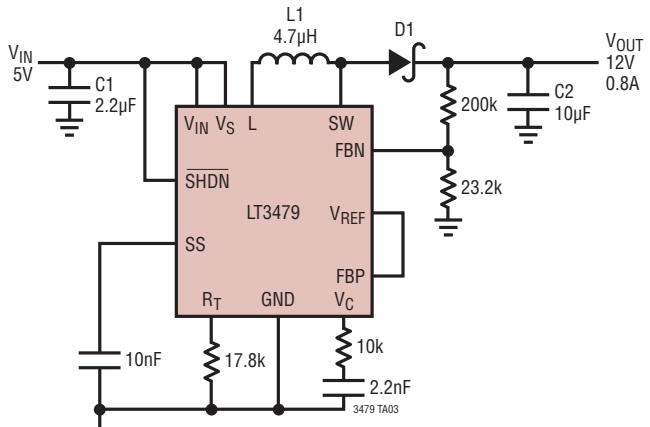

C1: TAIYO YUDEN LMK316BJ225MD
C2: AVX 1206 YD106MAT
D1: DIODES INC B320A
L1: TOKO FDV0630-4R7M

Efficiency

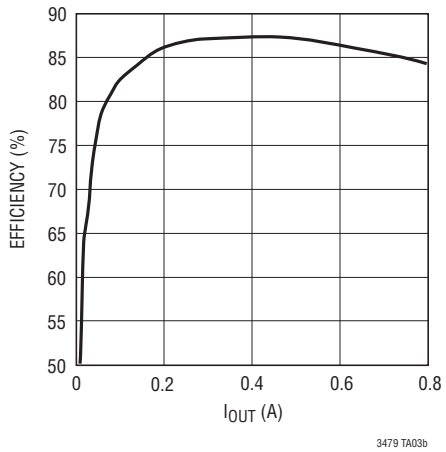

5V to 12V/800mA 500kHz Boost Converter

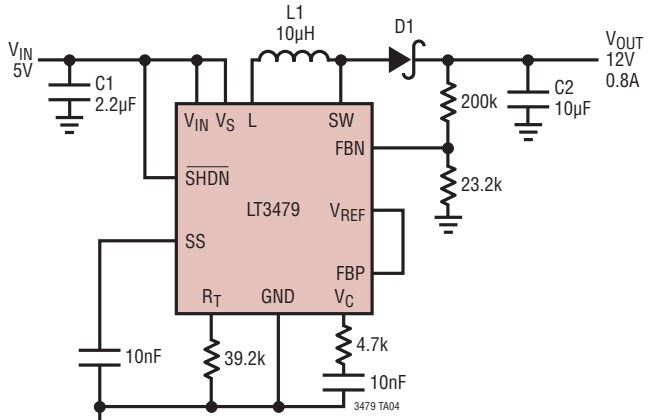

C1: TAIYO YUDEN LMK316BJ225MD
C2: AVX 1206 YD106MAT
D1: DIODES INC. B320A
L1: SUMIDA CDRH8D43-100

Efficiency

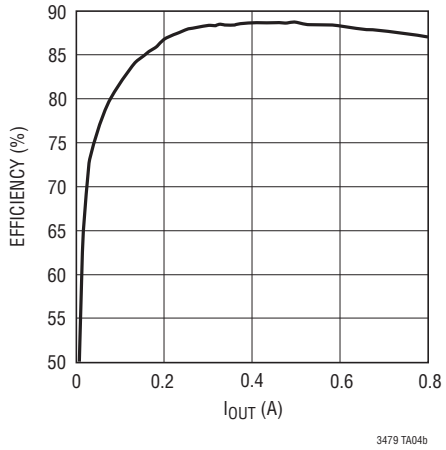

TYPICAL APPLICATIONS

3.3V to 8V/900mA Boost Converter

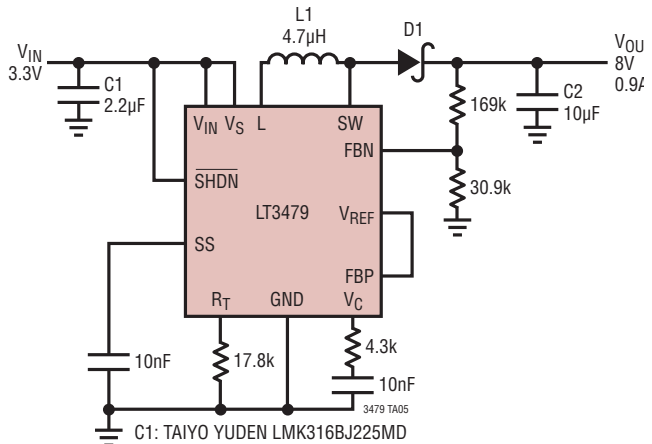

C1: TAIYO YUDEN LMK316BJ225MD
C2: AVX 1206 YD106MAT
D1: DIODES INC B320A
L1: TOKO FDV0630-4R7M

Efficiency

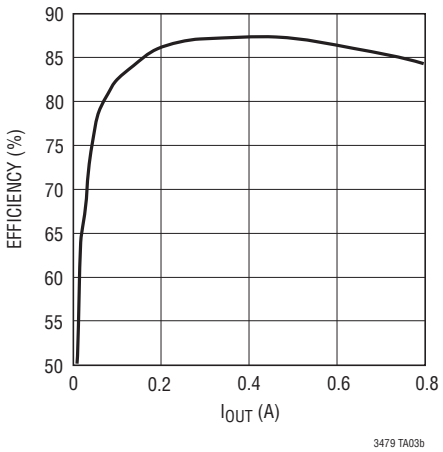

5V to –5V/600mA Inverting DC/DC Converter

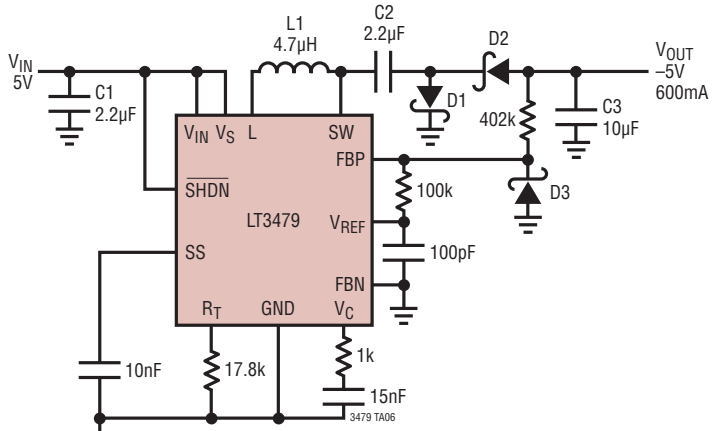

C1, C2: TAIYO YUDEN LMK316BJ225MD
C3: AVX 1206 YD106MAT
D1, D2: DIODES INC B320A
D3: CENTRAL SEMI, CMDSH-3-LTC
L1: TOKO FDV0630-4R7M

Efficiency

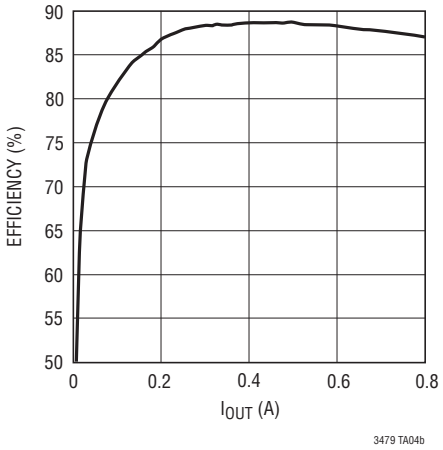

TYPICAL APPLICATIONS

500mA, 12 White LED Driver

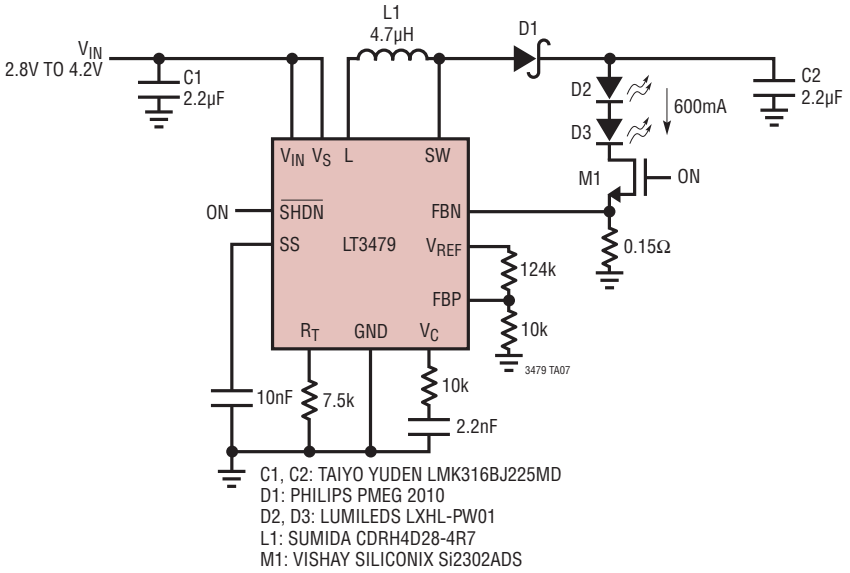

TYPICAL APPLICATIONS

500mA, 12 White LED Driver

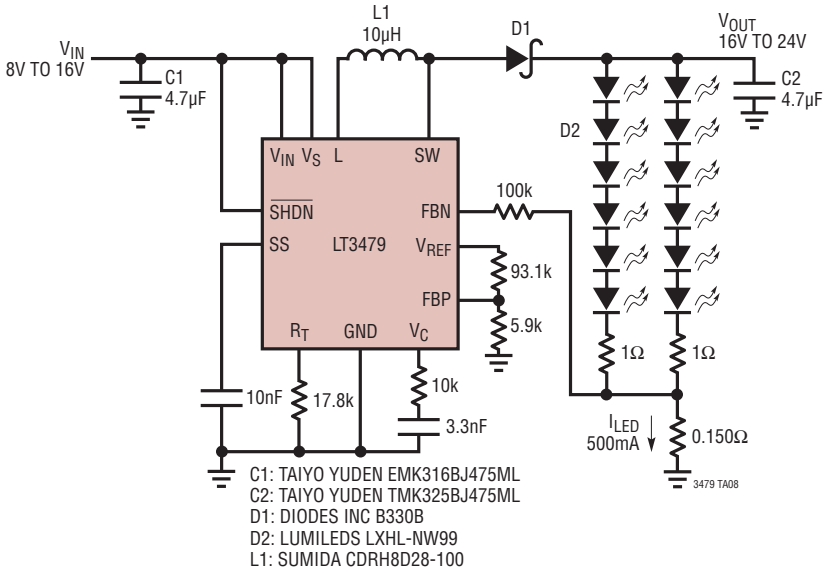

Efficiency

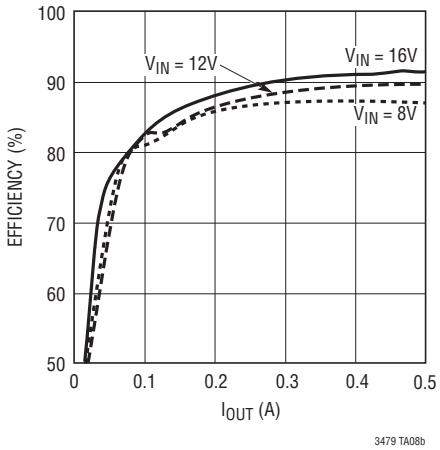

TYPICAL APPLICATIONS

8V, 16V, –8V Triple Output Power Supply for TFTLCD Panels

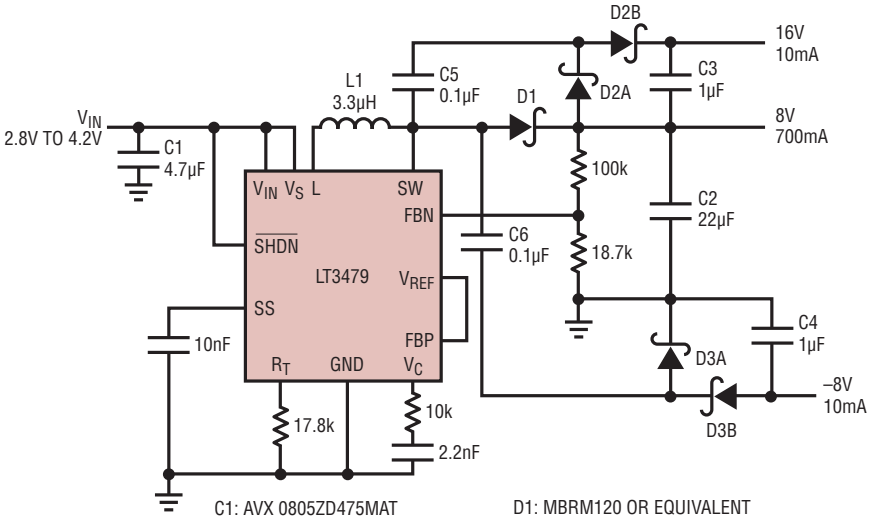

C1: AVX 0805ZD475MAT
C2: AVX 1210YD226MAT
C3 TO C6: X5R/X7R 10V

D1: MBRM120 OR EQUIVALENT
D2, D3: BAT54S OR EQUIVALENT
L1: SUMIDA CDRH4D28-3R3

3479 TA10

Efficiency

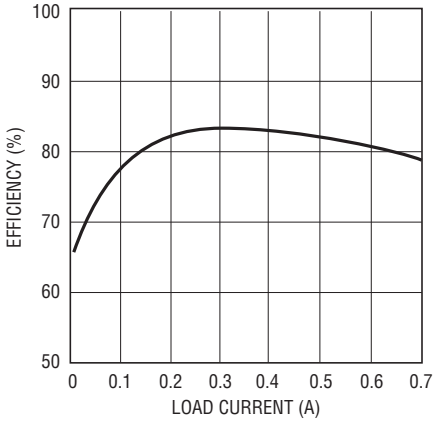

3479 TA10b

TYPICAL APPLICATIONS

1A Dual Tracking Power Supply with Adjustable Outputs

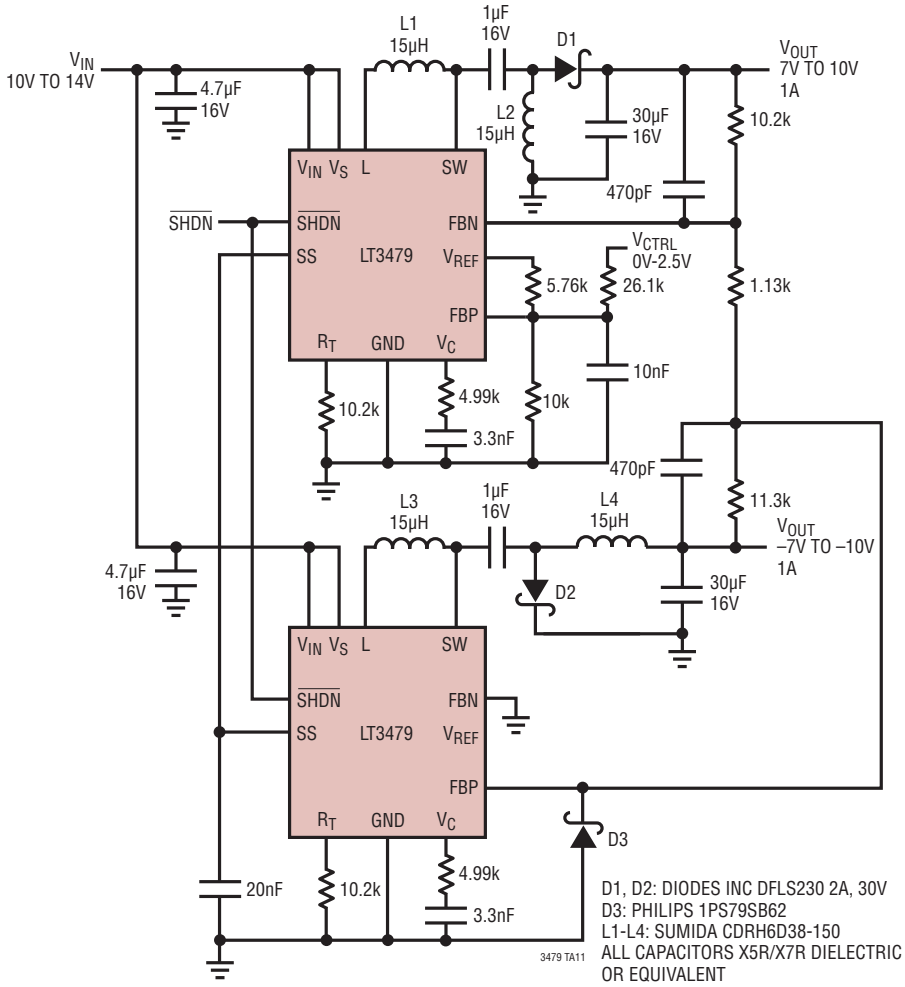

Efficiency

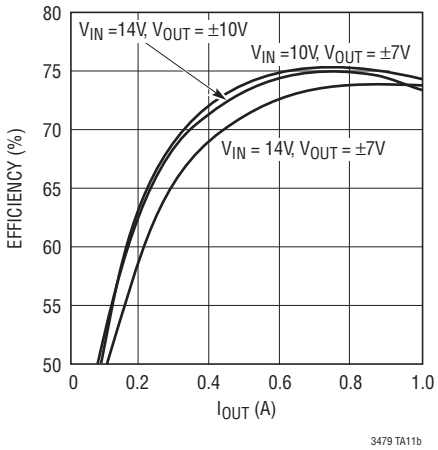

PACKAGE DESCRIPTION

DE Package
14-Lead Plastic DFN (4mm × 3mm)
(Reference LTC DWG # 05-08-1708)

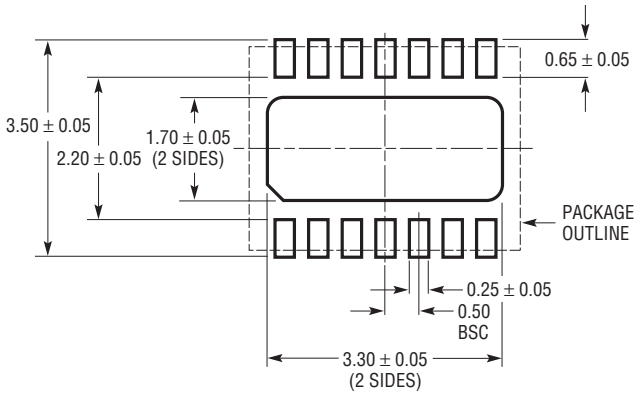

RECOMMENDED SOLDER PAD PITCH AND DIMENSIONS

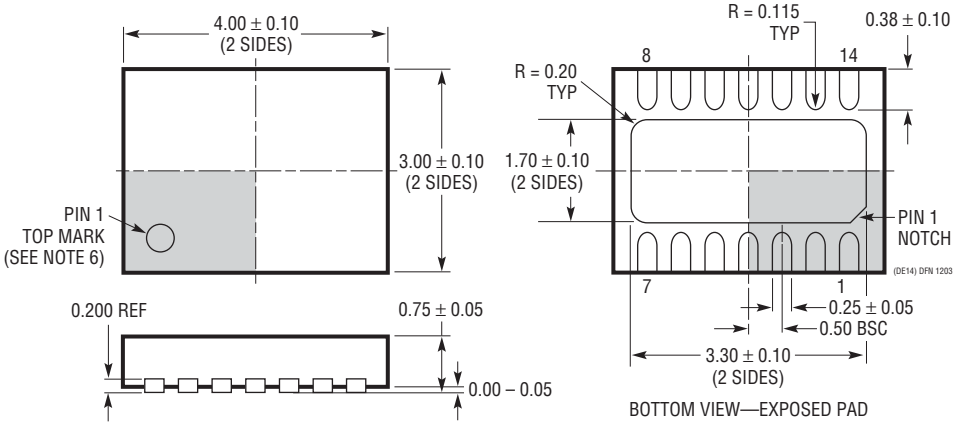

BOTTOM VIEW—EXPOSED PAD

NOTE:
1. DRAWING PROPOSED TO BE MADE VARIATION OF VERSION (WGED-3) IN JEDEC PACKAGE OUTLINE MO-229
2. DRAWING NOT TO SCALE
3. ALL DIMENSIONS ARE IN MILLIMETERS
4. DIMENSIONS OF EXPOSED PAD ON BOTTOM OF PACKAGE DO NOT INCLUDE MOLD FLASH. MOLD FLASH, IF PRESENT, SHALL NOT EXCEED 0.15mm ON ANY SIDE
5. EXPOSED PAD SHALL BE SOLDER PLATED
6. SHADED AREA IS ONLY A REFERENCE FOR PIN 1 LOCATION ON THE TOP AND BOTTOM OF PACKAGE

PACKAGE DESCRIPTION

FE Package
16-Lead Plastic TSSOP (4.4mm)
(Reference LTC DWG # 05-08-1663)
Exposed Pad Variation BC

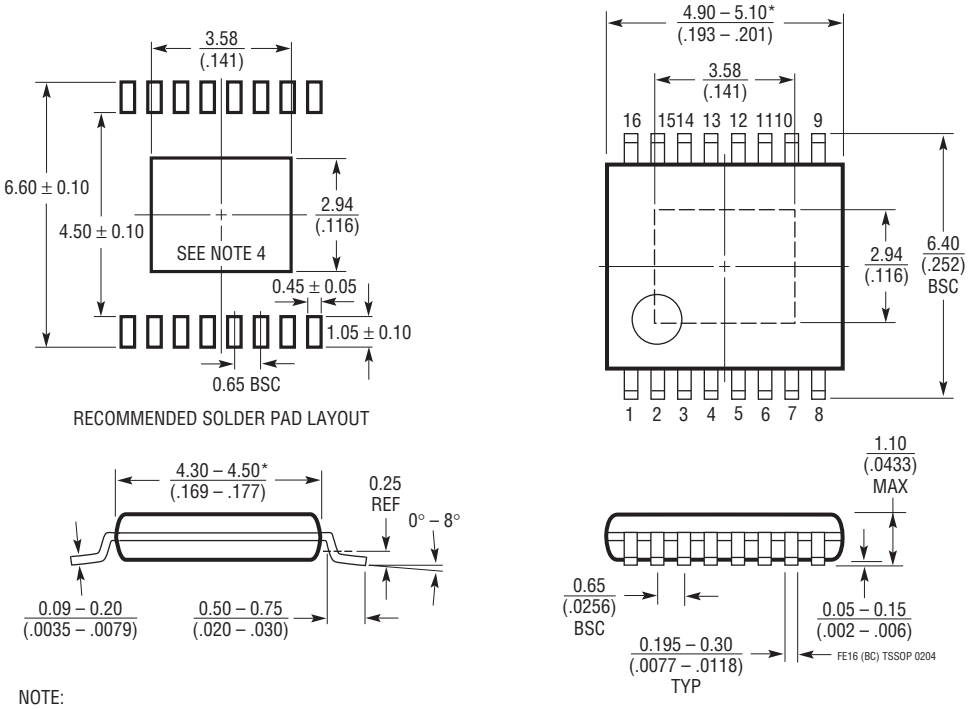

NOTE:
1. CONTROLLING DIMENSION: MILLIMETERS
2. DIMENSIONS ARE IN MILLIMETERS / (INCHES)
3. DRAWING NOT TO SCALE
4. RECOMMENDED MINIMUM PCB METAL SIZE FOR EXPOSED PAD ATTACHMENT

*DIMENSIONS DO NOT INCLUDE MOLD FLASH. MOLD FLASH SHALL NOT EXCEED 0.150mm (.006") PER SIDE

Information furnished by Linear Technology Corporation is believed to be accurate and reliable. However, no responsibility is assumed for its use. Linear Technology Corporation makes no representation that the interconnection of its circuits as described herein will not infringe on existing patent rights.

TYPICAL APPLICATION

Lumiled Driver for Photo Flash with Output Disconnnect

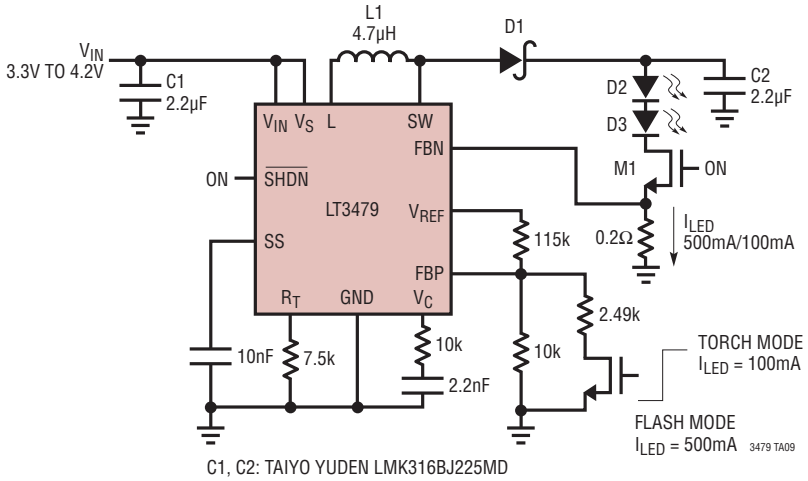

C1, C2: TAIYO YUDEN LMK316BJ225MD
D1: PHILIPS PMEG2010
D2, D3: LUMILEDS LXHL-PW01
L1: SUMIDA CDRH4D28-4R7
M1: VISHAY SILICONIX Si2302ADS

Lumileds Start-Up

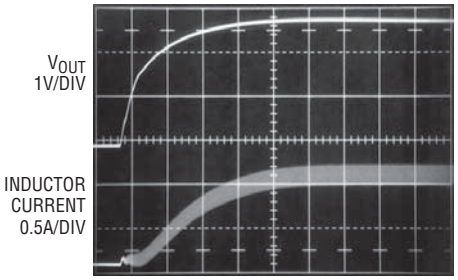

0.2ms/DIV

Lumileds Torch/Flash Transition

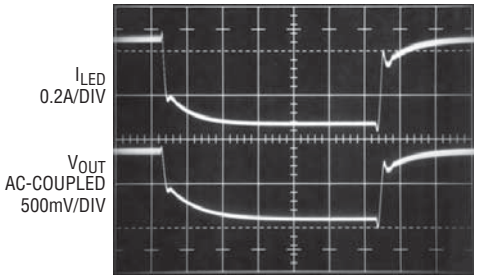

50µs/DIV

I_{LED} 500mA → 100mA → 500mA

RELATED PARTS

PART NUMBER	DESCRIPTION	COMMENTS
LT1618	Constant Current, Constant Voltage 1.4MHz, High Efficiency Boost Regulator	V_{IN}: 1.6V to 18V, $V_{OUT(MAX)}$ = 5.5V, I_Q = 2.5mA, I_{SD} = <1µA, QFN16 Package
LTC®3216	1A Low Noise High Current LED Charge Pump with Independent Torch/Flash Current Control	V_{IN}: 2.9V to 4.4V, $V_{OUT(MAX)}$ = 5.5V, I_Q = 300µA, I_{SD} = <1µA, DFN12 Package
LTC3436	3A (I_{SW}), 1MHz, 34V Step-Up DC/DC Converter	V_{IN}: 3V to 25V, $V_{OUT(MAX)}$ = 34V, I_Q = 0.9mA, I_{SD} = <6µA, TSSOP16E Package
LTC3453	Synchronous Buck-Boost High Power White LED Driver	V_{IN}: 2.7V to 5.5V, $V_{OUT(MAX)}$ = 5.5V, I_Q = 2.5mA, I_{SD} = <1µA, QFN16 Package
LT3466	Dual Constant Current, 2MHz, High Efficiency White LED Boost Regulator with Integrated Schottky Diode	V_{IN}: 2.7V to 24V, $V_{OUT(MAX)}$ = 40V, I_Q = 5mA, I_{SD} = <16µA, DFN Package

Linear Technology Corporation
1630 McCarthy Blvd., Milpitas, CA 95035-7417
(408) 432-1900 • FAX: (408) 434-0507 • www.linear.com

LT 0808 REV B • PRINTED IN USA

© LINEAR TECHNOLOGY CORPORATION 2004