OptoSupply
Light It Up

Super Flux Red LED

OSR5CAZ2C1P

■Features

- High Luminous Super Flux Output
- 5 ø Standard Directivity
- Superior Weather-resistance
- UV Resistant Epoxy
- Water Clear Type

■Applications

- Green House Applications
- Red : Blue LED Iv Ratio is 8:1*

*The ratio is summarized by the photosynthesis test on Phalaenopsis and provided from plant workshop in Taiwan.

■Outline Dimension

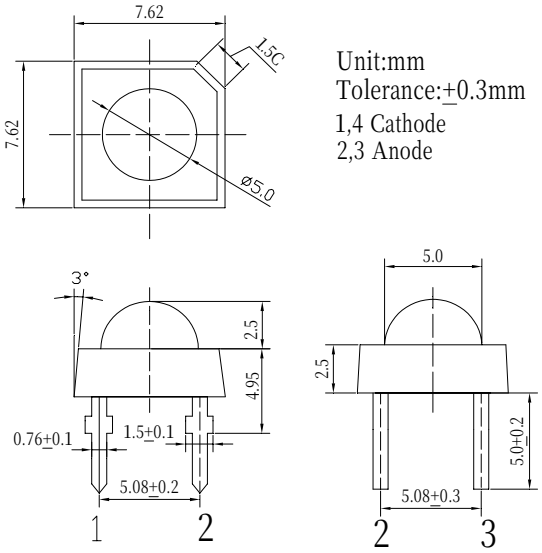

Unit:mm
Tolerance:±0.3mm
1,4 Cathode
2,3 Anode

■Absolute Maximum Rating (Ta=25℃)

Item	Symbol	Value	Unit
DC Forward Current	I_F	70	mA
Pulse Forward Current*	I_{FP}	120	mA
Reverse Voltage	V_R	5	V
Power Dissipation	P_D	182	mW
Operating Temperature	Topr	-30 ~ +85	℃
Storage Temperature	Tstg	-40 ~ +100	℃
Lead Soldering Temperature	Tsol	260℃/5sec	-

*Pulse width Max.10ms Duty ratio max 1/10

■Directivity

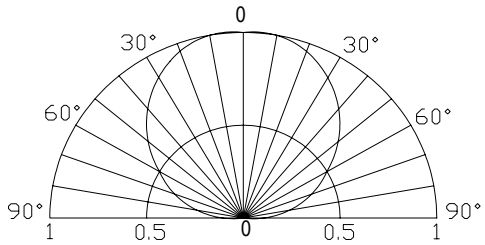

■Electrical -Optical Characteristics (Ta=25℃)

Item	Symbol	Condition	Min.	Typ.	Max.	Unit
DC Forward Voltage	V_F	I_F=70mA	2.0	2.3	2.6	V
DC Reverse Current	I_R	V_R=5V	-	-	10	μA
Peak Wavelength*	λ_p	I_F=70mA	650	660	670	nm
Luminous Intensity*	Iv	I_F=70mA	2180	3000	-	mcd
50% Power Angle	$2\theta_{1/2}$	I_F=70mA	-	120	-	deg

*1 Tolerance of dominant wavelength is ±1nm
*2 Tolerance of luminous intensity is ±15%

■Maximum Forward Current

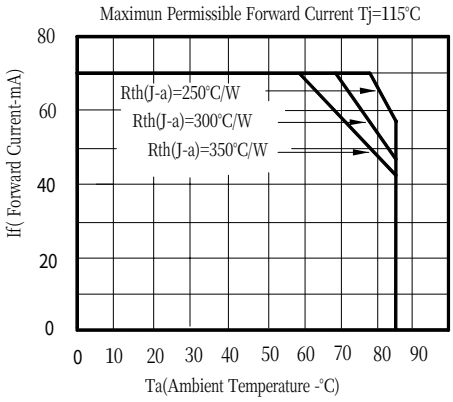

LED & Application Technologies