# MVAP, MVAL, and MVAV Series

- **Industry Standard Package**
- **Wide Frequency Range**
- **RoHS Compliant Available**
- **Less than 1 pSec Jitter**

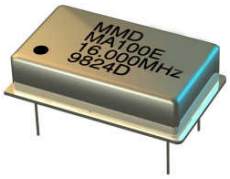


## ELECTRICAL SPECIFICATIONS:

| | | LVDS | LVPECL | PECL |
|---|---|---|---|---|
| Frequency Range | | 70.000MHz to 800.000MHZ | | |
| Frequency Stability* | | (See Part Number Guide for Options) | | |
| Operating Temp.Range | | (See Part Number Guide for Options) | | |
| Storage Temp. Range | | -55°C to +125°C | | |
| Aging | | ±5 ppm / yr max | | |
| Logic "0" | | 1.43V typ | Vdd – 1.620 VDC max | Vdd – 1.620 VDC max |
| Logic "1" | | 1.10V typ | Vdd- 1.025 vdc min | Vdd- 1.025 vdc min |
| Supply Voltage (Vdd) Supply Current | +2.5VDC ± 5% | 50 mA max | 50 mA max | N/A |
| | +3.3VDC ± 5% | 60 mA max | 60 mA max | N/A |
| | +5.0VDC ± 5% | N/A | N/A | 140 mA max |
| Symmetry (50% of waveform) | | (See Part Number Guide for Options) | | |
| Rise / Fall Time (20% to 80%) | | 2nSec max | | |
| Load | | 50 Ohms into Vdd-2.00 VDC | | |
| Start Time | | 10mSec max | | |
| Phase Jitter (12kHz to 20MHz) | | Less than 1 pSec | | |
| Tri-State Operation | | Vih = 70% of Vdd min to Enable Output<br>Vil = 30% max or grounded to Disable Output (High Impedance) | | |
| * Inclusive of Temp., Load, Voltage and Aging | | | | |

| | | | | |
|---|---|---|---|---|
| Control Voltage (Vc) | +2.5VDC | 1.25VDC ±1.00VDC | 1.25VDC ±1.00VDC | N/A |
| | +3.3VDC | 1.65VDC ±1.50VDC | 1.65VDC ±1.50VDC | N/A |
| | +5.0VDC | N/A | N/A | 2.50VDC ±2.00VDC |
| Pullability | | (See Part Number Guide for Options) | | |

## PART NUMBER GUIDE:

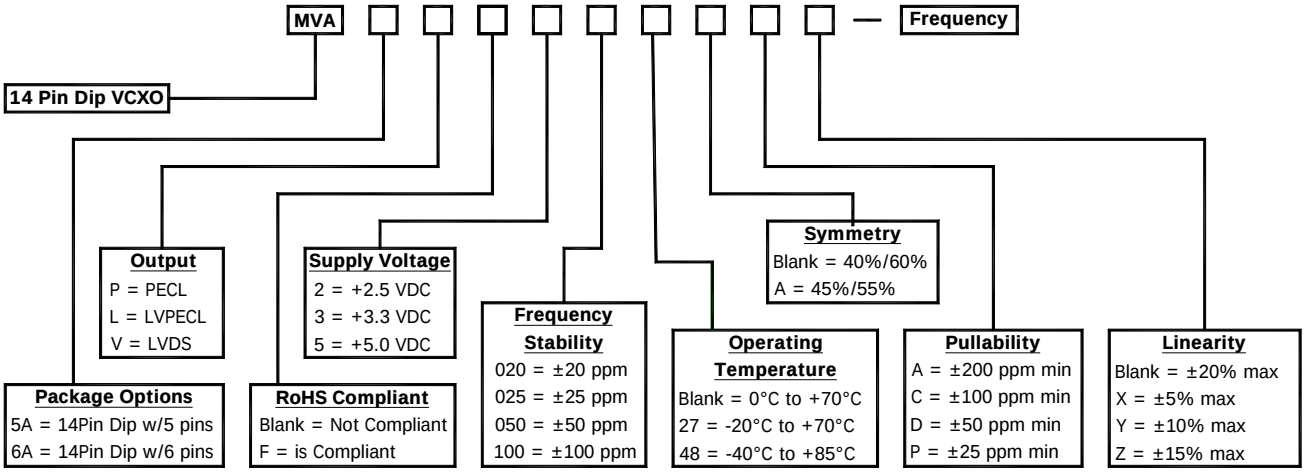


**MMD Components**, 30400 Esperanza, Rancho Santa Margarita, CA, 92688
Phone: (949) 709-5075, Fax: (949) 709-3536, www.mmdcomp.com
Sales@mmdcomp.com

## MECHANICAL DIMENSIONS: 5A OPTION

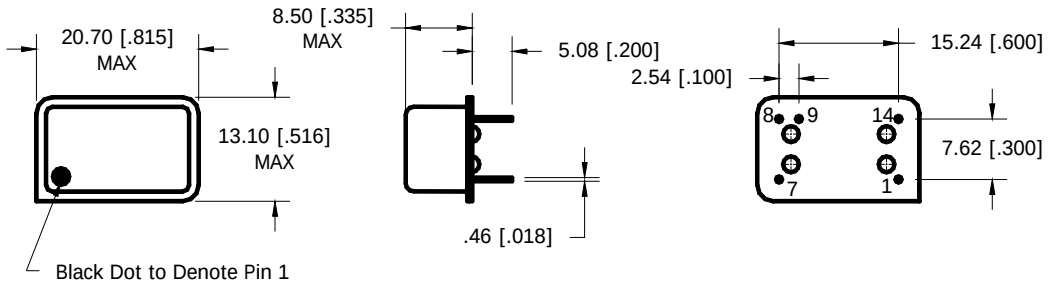


| 5A PACKAGE OPTION | |
|---|---|
| PIN 1 | VOLTAGE CONTROL |
| PIN 7 | CASE GROUND |
| PIN 8 | OUTPUT |
| PIN 9 | COMPL. OUTPUT |
| PIN 14 | SUPPLY VOLTAGE |

DIMENSIONS IN BRACKETS ARE IN INCHES
EXTERNAL BYPASS CAPACITOR IS RECOMMENDED

## MECHANICAL DIMENSIONS: 6A OPTION

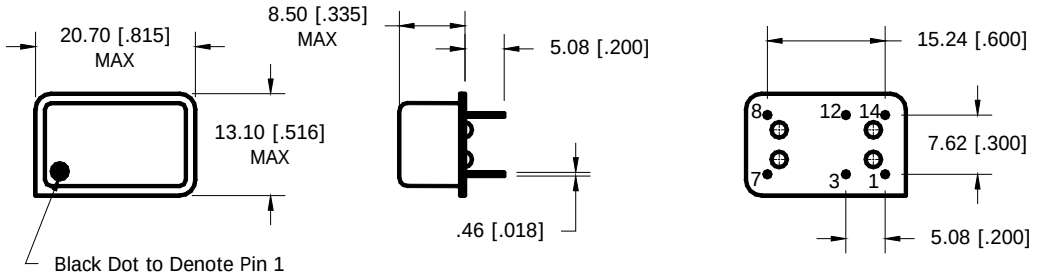


| 6A PACKAGE OPTION | |
|---|---|
| PIN 1 | CONTROL VOLTAGE |
| PIN 3 | ENABLE/DISABLE |
| PIN 7 | OUTPUT |
| PIN 8 | OUTPUT |
| PIN 12 | COMPL. OUTPUT |
| PIN 14 | SUPPLY VOLTAGE |

| ENABLE/DISABLE OPTION |
|---|
| LOGIC 1 = OSCILLATOR |
| LOGIC 0 OR GND = NO OSCILLATOR |

DIMENSIONS IN BRACKETS ARE IN INCHES
EXTERNAL BYPASS CAPACITOR IS RECOMMENDED

## ENVIRONMENT / MECHANICAL:

| | |
|---|---|
| Shock | MIL-STD-883, Method 2002, Condition B |
| Solderability | MIL-STD-883, Method 2003 |
| Solvent Resistance | MIL-STD-883, Method 215 |
| Vibration | MIL-STD-883, Method 2007, Condition A |
| Gross Leak Test | MIL-STD-883, Method 1014, Condition C |
| Fine Leak Test | MIL-STD-883, Method 1014, Condition A-2 |

## TAPE and DIMENSIONS:

Line 1 =MXXXXX
M = MMD COMPONENTS
XXXXX = Frequency in MHZ

Line 2 = SYYMML
S = Internal Code
YYMM = 4 Digit Date Code (Year / Month)
L = Denotes RoHS Compliant

Line 3 = XXXXX
Internal use only
May vary with lots

Black dot to denote Pin 1

## PHASE NOISE:

PHASE NOISE PLOT
COMING SOON

**MMD Components**, 30400 Esperanza, Rancho Santa Margarita, CA, 92688
Phone: (949) 709-5075, Fax: (949) 709-3536, www.mmdcomp.com
Sales@mmdcomp.com