TACT Switch™

6mm Square (Snap-in Type)

SKHH Series

Car Use | RoHS compliant

User friendly 6×6mm type, available in a wide variety.

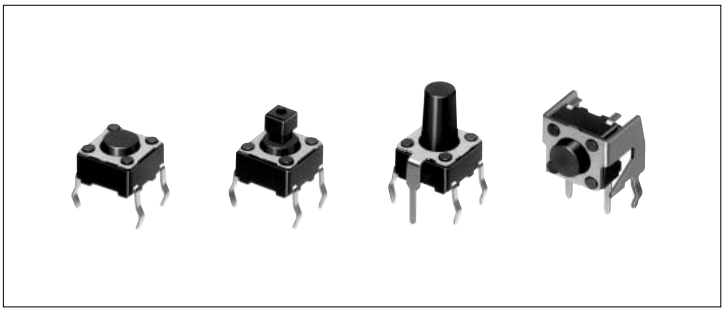

Product Line

Vertical Type

Product No.	Operating force	Operating direction	Travel (mm)	Rating (max.)	Rating (min.)	Operating life (5mA 5V DC)	Initial contact resistance	Stem color	Stem height	Minimum order unit (pcs.)	Drawing No.
SKHHAJA010	0.98N	Vertical	0.25	50mA 12V DC	10μA 1V DC	1,000,000cycles	100mΩ max.	Black	h=4.3mm	1,000	1
SKHHALA010	1.57N					500,000cycles		Dark gray			
SKHHAQA010	2.55N					200,000cycles		Red			
SKHHAKA010	0.98N					1,000,000cycles		Black	h=5mm		
SKHHAMA010	1.57N					500,000cycles		Dark gray			
SKHHARA010	2.55N					200,000cycles		Red			
SKHHCQA010	3.53N							Orange			
SKHHCRA010	5.10N							Yellow			
SKHHBVA010	0.98N					1,000,000cycles		Black	h=7mm		
SKHHBWA010	1.57N					500,000cycles		Dark gray			
SKHHBYA010	2.55N					200,000cycles		Red			
SKHHANA010	0.98N					1,000,000cycles		Black	h=9.5mm		
SKHHAPA010	1.57N					500,000cycles		Dark gray			
SKHHBSA010	2.55N					200,000cycles		Red			
SKHHDTA010	0.98N					1,000,000cycles		Black	h=13mm		
SKHHDUA010	1.57N					500,000cycles		Dark gray			
SKHHDHA010	0.98N							Black	h=17mm		
SKHHDJA010	1.57N					300,000cycles		Dark gray			

Joint Stem Type

Product No.	Operating force	Operating direction	Travel (mm)	Rating (max.)	Rating (min.)	Operating life (5mA 5V DC)	Initial contact resistance	Stem color	Stem height	Minimum order unit (pcs.)	Drawing No.
SKHHCWA010	0.98N	Vertical	0.25	50mA 12V DC	10μA 1V DC	1,000,000 cycles	100mΩ max.	Black	h=7.3mm	1,000	2
SKHHDAA010	1.57N					500,000 cycles		Dark gray			
SKHHDGA010	2.55N					200,000 cycles		Red			

Refer to **P.306** for soldering conditions.
Refer to **P.308** for standard knobs.

Detector
Push
Slide
Rotary
Encoders
Power
Dual-in-line Package Type
TACT Switch™
Custom-Products

Product Line

With Ground Terminal Type

Product No.	Operating force	Operating direction	Travel (mm)	Rating (max.)	Rating (min.)	Operating life (5mA 5V DC)	Initial contact resistance	Stem color	Stem height	Minimum order unit (pcs.)	Drawing No.
SKHHPJA010	0.98N	Vertical	0.25	50mA 12V DC	10μA 1V DC	1,000,000 cycles	100mΩ max.	Black	h=4.3mm	1,000	3
SKHHPLA010	1.57N					500,000 cycles		Dark gray			
SKHHPQA010	2.55N					200,000 cycles		Red			
SKHHPKA010	0.98N					1,000,000 cycles		Black	h=5mm		
SKHHPMA010	1.57N					500,000 cycles		Dark gray			
SKHHPRA010	2.55N					200,000 cycles		Red			
SKHHQVA010	0.98N					1,000,000 cycles		Black	h=7mm		
SKHHQWA010	1.57N					500,000 cycles		Dark gray			
SKHHQYA010	2.55N					200,000 cycles		Red			
SKHHPNA010	0.98N					1,000,000 cycles		Black	h=9.5mm		
SKHHPPA010	1.57N					500,000 cycles		Dark gray			
SKHHQNA010	2.55N					200,000 cycles		Red			

Horizontal Type

Product No.	Operating force	Operating direction	Travel (mm)	Rating (max.)	Rating (min.)	Operating life (5mA 5V DC)	Initial contact resistance	Stem color	Stem length	Minimum order unit (pcs.)	Drawing No.
SKHHLMA010	0.98N	Horizontal	0.25	50mA 12V DC	10μA 1V DC	1,000,000 cycles	100mΩ max.	Black	ℓ=3.85mm	1,000	4
SKHHLNA010	1.57N					500,000 cycles		Dark gray			
SKHHLPA010	2.55N					200,000 cycles		Red			
SKHHLQA010	0.98N					1,000,000 cycles		Black	ℓ=8.35mm		
SKHHLRA010	1.57N					500,000 cycles		Dark gray			
SKHHLSA010	2.55N					200,000 cycles		Red			
SKHHLUA010	0.98N					1,000,000 cycles		Black	ℓ=5.85mm		
SKHHLVA010	1.57N					500,000 cycles		Dark gray			
SKHHLWA010	2.55N					200,000 cycles		Red			
SKHHNHA010	0.98N					500,000 cycles		Black	ℓ=15.85mm		
SKHHNJA010	1.57N					300,000 cycles		Dark gray			
SKHHNKA010	2.55N					200,000 cycles		Red			

Sharp Feeling
Soft Feeling
Snap-in Type
Surface Mount Type
Radial Type

Dimensions

Unit:mm

No.	Photo	Style	PC board mounting hole dimensions (Viewed from switch mounting face)
1	Vertical type	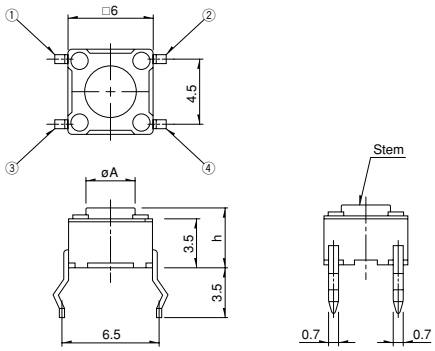	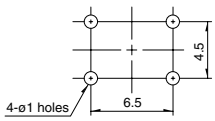
2	Joint stem type	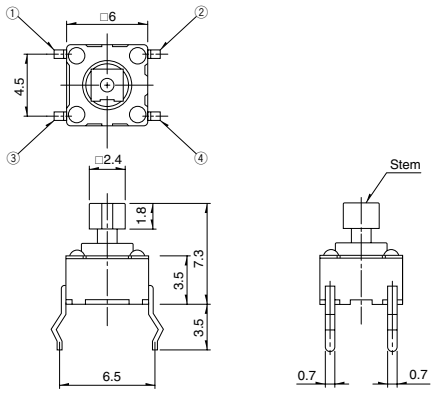	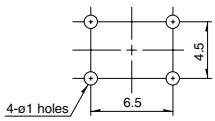
3	With ground terminal type	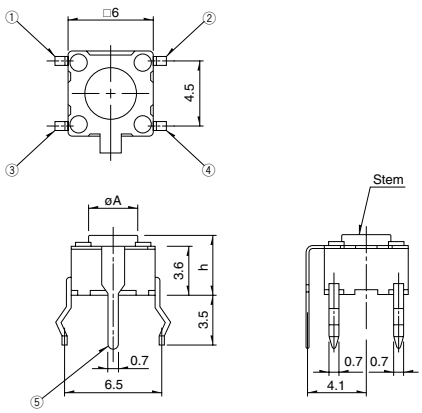	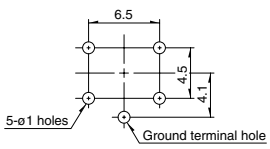

h	A
4.3	3.5
5	3.5
7	3.3
9.5	3
13	3
17	3

h	A
4.3	3.5
5	3.5
7	3.3
9.5	3

Detector
Push
Slide
Rotary
Encoders
Power
Dual-in-line Package Type
TACT Switch™
Custom-Products

Dimensions

Unit:mm

No.	Photo	Style	PC board mounting hole dimensions (Viewed from switch mounting face)
4	Horizontal type	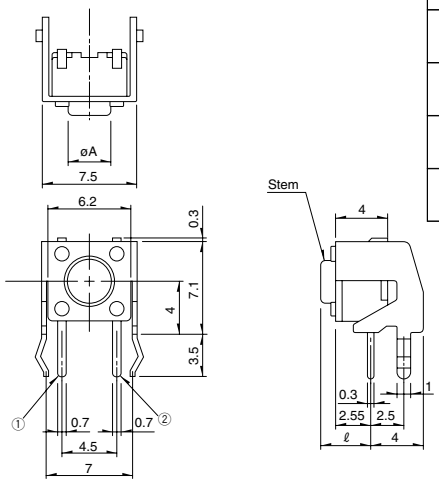	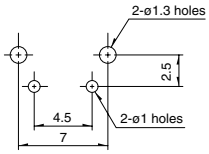

ℓ	A
3.85	3.5
5.85	3.3
8.35	3
15.85	3

Note

Please use 1.6mm thick PC boards.

Circuit Diagram

Vertical type/Joint stem type	With ground terminal type	Horizontal type
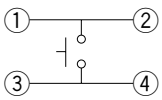	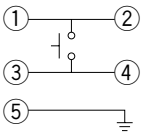	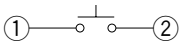

Sharp Feeling
Soft Feeling
Snap-in Type
Surface Mount Type
Radial Type

List of Varieties

Sharp Feeling Type

Series		SKHR	SKHL	SKHH	SKHW	SKRD	SKQJ	SKHL	SKHH	SKQJ	SKHJ	SKQB
Photo												
Type		Snap–in										
Features		—			Dust–proof type	Horizontal type	—	Horizontal type			With LED	Water–proof
Operating direction	Vertical	●	●	●	●	—	●	—			●	●
	Horizontal	—				●	—	●	●	●	—	
Dimensions (mm)	W	□4.5	6	□6		6.2	□6.6	7.3	7.5		□8	□10
	D		3.5			7.15		7.22	7.85			
	H	3.8	4.3			7.4	5	4.3	7.4	7.3	8.5	5
Operation force coverage 1N / 5N		↕	↕	↕	↕	↕	↕	↕	↕	↕	↕	↕
Ground terminal		—		●	—			●	●	—		
Operating temperature range		-20℃ to +70℃ SKHJ/HL(Vertical Type) /QJ										
		-30℃ to +85℃										
Electrical performance	Insulation resistance	100MΩ min. 100V DC										
	Voltage proof	250V AC for 1min.										
Durability	Vibration	10 to 55 to 10Hz/min., the amplitude is 1.5mm for all the frequencies, in the 3 direction of X, Y and Z for 2hours respectively										
	Lifetime	Shall be in accordance with individual specifications.										
Environmental performance	Cold	-30±2℃ for 96h										
	Dry heat	80±2℃ for 96h										
	Damp heat	60±2℃, 90 to 95%RH for 96h										
Page		252	253	255	259	260	261	253	255	261	263	265

W : Width. The most outer dimension excluding terminal portion.
D : Depth. The most outer dimension excluding terminal portion.
H : Height. The minimum dimension if there are variances.

● TACT Switch™ Soldering Conditions ····· 306
● TACT Switch™ Cautions ····· 307
● Product Line of Knob for TACT Switch™ ····· 308

Note

The automotive operating temperature range to be individually discussed upon request.

Soldering Conditions

Condition for Reflow

Available for Surface Mount Type.

1. Heating method: Double heating method with infrared heater.
2. Temperature measurement: Thermocouple 0.1 to 0.2φ CA (K) or CC (T) at solder joints (copper foil surface). A heat resistive tape should be used to fix thermocouple.
3. Temperature profile

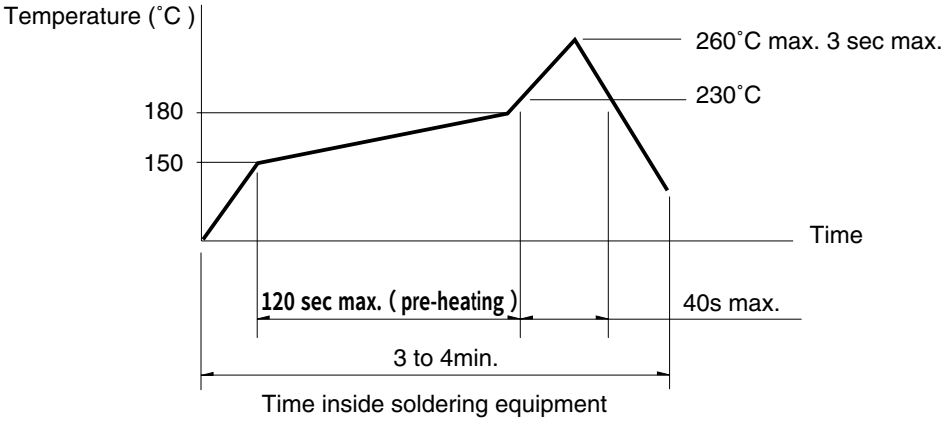

Note

1. The above temperature shall be measured on the mounting surface of a PC board. There are cases where the PC board's temperature greatly differs from that of the switch, depending on the material, size, thickness of PC boards and others. The above-stated conditions shall also apply to switch surface temperatures.
2. Soldering conditions differ depending on reflow soldering machines. Prior verification of soldering condition is highly recommended.

Conditions for Auto-dip

Available for Snap-in Type and Radial Type
(Except SKHJ, SKHL, SKQJ, SKQK, SKEG series)

Items	Condition
Flux built-up	Mounting surface should not be exposed to fluk
Preheating temperature	Ambient temperature of the soldered surface of PC board. 100℃ max.
Preheating time	60s max.
Soldering temperature	260℃ max.
Duration of immersion	5s max.
Number of soldering	2times max.

Manual Soldering (Except SKRT Series)

Items	Condition
Soldering temperature	350℃max.
Duration of soldering	3s max.
Capacity of soldering iron	60W max.

Notes

1. Consult with us for availability of TACT Switch™ washing.
2. Prevent flux penetration from the top side of the TACT Switch™.
3. Switch terminals and a PC board should not be coated with flux prior to soldering.
4. The second soldering should be done after the switch is stable with normal temperature.
5. Use the flux with a specific gravity of min 0.81.
   (EC-19S-8 by TAMURA Corporation, or equivalents.)

Product Line of Knobs

Unit:mm

Applicable model	Dimensions		Variety			Label dimensions (Unit:mm)
			Color	Model		
SKHH Applicable to joint stem type		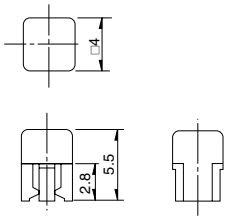	Keytop			
			Red Blue Ivory Black Yellow	SK2AA00410 SK2AA00420 SK2AA00430 SK2AA00440 SK2AA00450		
SKHC SKQE Applicable to joint stem type		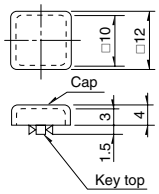	Cap			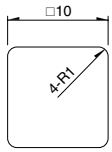
			Clear	SK2AA00510		
			Keytop		Keytop+Cap	
			Red Blue Ivory Black	SK2AA00010 SK2AA00020 SK2AA00030 SK2AA00040	SK2AA00060 SK2AA00070 SK2AA00080 SK2AA00090	Thickness 0.1
SKHJ		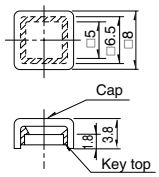	Cap			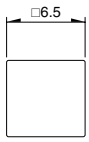
			Clear	SK2AA00520		
			Keytop		Keytop+Cap	
			Red Blue Ivory Black Yellow	SK2AA00210 SK2AA00220 SK2AA00230 SK2AA00240 SK2AA00250	SK2AA00260 SK2AA00270 SK2AA00280 SK2AA00290 SK2AA00300	Thickness 0.1
SKEG Applicable to joint stem type		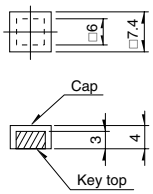	Cap			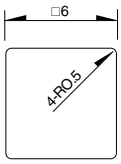
			Clear	SK2AA00540		
			Keytop		Keytop+Cap	
			Red Blue Ivory Black Yellow	SK2AA00310 SK2AA00320 SK2AA00330 SK2AA00340 SK2AA00350	SK2AA00360 SK2AA00370 SK2AA00380 SK2AA00390 SK2AA00400	Thickness 0.1

Notes
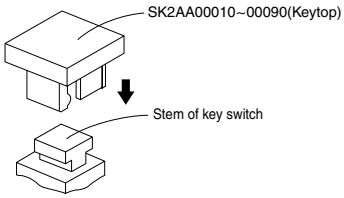
1. The knob will be delivered together with the switch but packed separately.
2. The label is not included.
3. For SK2AA00010 to SK2AA00090 types, please check the mounting direction.