0.55mm Height Low-profile (Surface Mount Type)

SKRB Series

Car Use | RoHS compliant

4.8×4.8mm with height of 0.55mm. Compact low & profile.

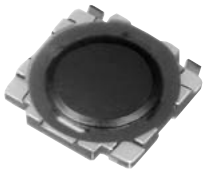

Product Line

Product No.	Operating force	Operating direction	Travel (mm)	Rating (max.)	Rating (min.)	Operating life (5mA 5V DC)	Initial contact resistance	Minimum order unit (pcs.)
SKRBAGE010	1.1N	Vertical	0.15	50mA 12V DC	10μA 1V DC	2,000,000cycles	100mΩ max.	10,000
SKRBAAE010	1.57N		0.2			1,000,000cycles		
SKRBACE010	2.55N					500,000cycles		
SKRBAKE010	3.5N					200,000cycles		

Specification of Embossed Taping Package (Taping Packaging for Auto-insertion)

Reel Size Unit:mm

Plastic Reel

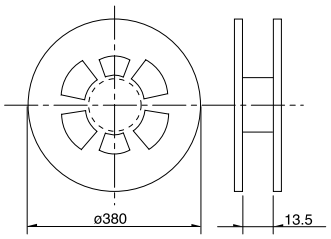

Number of packages (pcs.)			Tape width (mm)
1 reel	1 case /Japan	1 case /export packing	
10,000	100,000	100,000	12

Dimensions

Unit:mm

Style	PC board land dimensions (Viewed from switch mounting face)
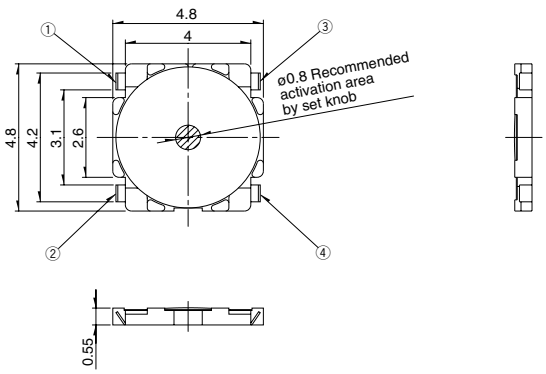	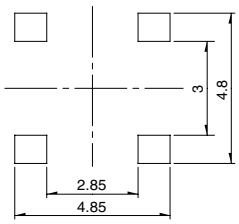

Circuit Diagram

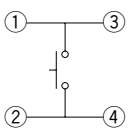

Note

1. Please place purchase orders for taping products per minimum order unit (1 reel or a case).
2. For ϕ330mm diameter reel requirements, please contact us.

Refer to **P.306** for soldering conditions.

ALPS

Detector
Push
Slide
Rotary
Encoders
Power
Dual-in-line Package Type
TACT Switch™
Custom-Products
Sharp Feeling
Soft Feeling
Snap-in Type
Surface Mount Type
Radial Type

List of Varieties

Sharp Feeling Type

Series		SKQU	SKQB	SKQE	SKHC	SKHK	SKRW	SKRM	SKQR	SKRB	SKRR	SKQG
Photo												
Type		Snap–in					Surface mount					
Features		4–direction switch+push switch	Water–proof Horizontal type	Long Life	—	Long Stem	Low–profile				Low–profile and long life	Low–profile
Operating direction	Vertical	●	—	●	●	●	●	●	●	●	●	●
	Horizontal	—	●	—								
Dimensions (mm)	W	□10	11.5	□12			□3.7	□4.5	□4.8		7.5	□5.2
	D		11.9								7	
	H	7.1	11.3	4.3		12	0.35	0.4	0.5	0.55	0.6	0.8
Operation force coverage	1N / 5N	See the relevant pages for respective product descriptions	●	↕	↕	●	↕	↕	↕	↕	↕	↕
Ground terminal		—										
Operating temperature range		-30℃ to +85℃										
Electrical performance	Insulation resistance	100MΩ min. 100V DC										
	Voltage proof	250V AC for 1min. SKRW/RM/RB/RR : 100V AC for 1min.										
Durability	Vibration	10 to 55 to 10Hz/min., the amplitude is 1.5mm for all the frequencies, in the 3 direction of X, Y and Z for 2hours respectively										
	Lifetime	Shall be in accordance with individual specifications.										
Environmental performance	Cold	-30±2℃ for 96h										
	Dry heat	80±2℃ for 96h										
	Damp heat	60±2℃, 90 to 95%RH for 96h										
Page		482	265	267	268	270	271	272	273	274	275	276

W : Width. The most outer dimension excluding terminal portion.
D : Depth. The most outer dimension excluding terminal portion.
H : Height. The minimum dimension if there are variances.

● TACT Switch™ Soldering Conditions ····· 306
● TACT Switch™ Cautions ····· 307
● Product Line of Knob for TACT Switch™ ····· 308

Note

The automotive operating temperature range to be individually discussed upon request.

ALPS

Soldering Conditions

Condition for Reflow

Available for Surface Mount Type.

1. Heating method: Double heating method with infrared heater.
2. Temperature measurement: Thermocouple 0.1 to 0.2φ CA (K) or CC (T) at solder joints (copper foil surface). A heat resistive tape should be used to fix thermocouple.
3. Temperature profile

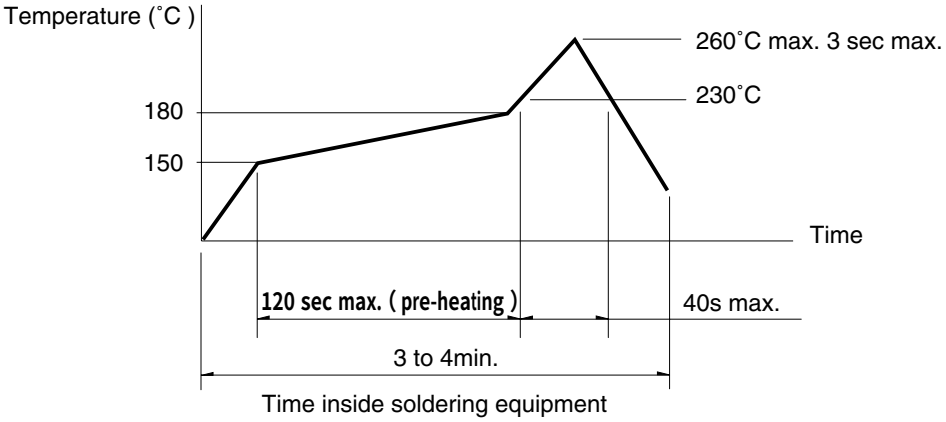

Note

1. The above temperature shall be measured on the mounting surface of a PC board. There are cases where the PC board's temperature greatly differs from that of the switch, depending on the material, size, thickness of PC boards and others. The above-stated conditions shall also apply to switch surface temperatures.
2. Soldering conditions differ depending on reflow soldering machines. Prior verification of soldering condition is highly recommended.

Conditions for Auto-dip

Available for Snap-in Type and Radial Type
(Except SKHJ, SKHL, SKQJ, SKQK, SKEG series)

Items	Condition
Flux built-up	Mounting surface should not be exposed to fluk
Preheating temperature	Ambient temperature of the soldered surface of PC board. 100℃ max.
Preheating time	60s max.
Soldering temperature	260℃ max.
Duration of immersion	5s max.
Number of soldering	2times max.

Manual Soldering (Except SKRT Series)

Items	Condition
Soldering temperature	350℃max.
Duration of soldering	3s max.
Capacity of soldering iron	60W max.

Notes

1. Consult with us for availability of TACT Switch™ washing.
2. Prevent flux penetration from the top side of the TACT Switch™.
3. Switch terminals and a PC board should not be coated with flux prior to soldering.
4. The second soldering should be done after the switch is stable with normal temperature.
5. Use the flux with a specific gravity of min 0.81.
   (EC-19S-8 by TAMURA Corporation, or equivalents.)