molex
one company › a world of innovation

This document was generated on 05/19/2010

PLEASE CHECK WWW.MOLEX.COM FOR LATEST PART INFORMATION

Part Number: 0701070036

Status: Active

Overview: cgrid__sl_products

Description: 2.54mm (.100") Pitch SL™ Wire-to-Wire Panel Mount Crimp Housing, Single Row, Version B, With Mounting Ears, 2 Circuits

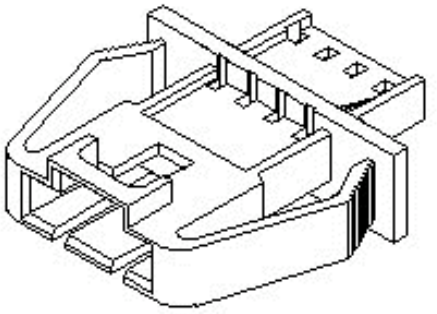

Series

image - Reference only

Documents:

3D Model
Drawing (PDF)
Product Specification PS-70400 (PDF)
RoHS Certificate of Compliance (PDF)

Agency Certification

CSA	LR19980
TUV	R72081037
UL	E29179

General

Product Family	Crimp Housings
Series	70107
Overview	cgrid__sl_products
Product Name	SL™

Physical

Circuits (maximum)	2
Color - Resin	Black
Flammability	94V-0
Gender	Male
Glow-Wire Compliant	No
Material - Resin	Polyester
Number of Rows	1
Packaging Type	Bag
Panel Mount	Yes
Pitch - Mating Interface (in)	0.100 In
Pitch - Mating Interface (mm)	2.54 mm
Temperature Range - Operating	-40°C to +120°C

Material Info

Reference - Drawing Numbers

Packaging Specification	PK-70107-100
Product Specification	PS-70400
Sales Drawing	SD-70107-0036-0059

EU RoHS
ELV and RoHS Compliant
REACH SVHC
Contains SVHC: No
Halogen-Free Status
Not Halogen-Free

China RoHS

Need more information on product environmental compliance?

Email productcompliance@molex.com
For a multiple part number RoHS Certificate of Compliance, click here

Please visit the Contact Us section for any non-product compliance questions.

Search Parts in this Series
70107Series

Mates With
70400G ,, 70066g Housing, 70430g Receptacle

Use With
70021

This document was generated on 05/19/2010

PLEASE CHECK WWW.MOLEX.COM FOR LATEST PART INFORMATION

NOTES:

1) MATERIAL: POLYESTER, 94V-0
   COLOR: BLACK
2) HOUSING TO BE USED WITH TERMINAL PT. NO. 70021-****
3) SEE CHART FOR CIRCUIT SIZES
4) TO BE USED WITH 70400 SERIES CONNECTORS (STYLE "G")
5) PANEL THICKNESS (0.81)/.032 - (2.36)/.093
6) SEE SHEET 3 FOR MOUNTING HOLE DIMENSIONS.
7) SEE SHEET 2 FOR OPTIONAL SKIRT AND SHROUD CONFIGURATIONS
8) PACKAGE PER PK-70107-100.

CKT. SIZE	EDP. NO.	ENG. NO.	A	B
2	701-07-0036	70107-0036	(16.51) .650	(2.54) .100
3	701-07-0037	70107-0037	(19.05) .750	(5.08) .200
4	701-07-0038	70107-0038	(21.59) .850	(7.62) .300
5	701-07-0039	70107-0039	(24.13) .950	(10.16) .400
6	701-07-0040	70107-0040	(26.67) 1.050	(12.70) .500
7	701-07-0041	70107-0041	(29.21) 1.150	(15.24) .600
8	701-07-0042	70107-0042	(31.75) 1.250	(17.78) .700
9	701-07-0043	70107-0043	(34.29) 1.350	(20.32) .800
10	701-07-0044	70107-0044	(36.83) 1.450	(22.86) .900
11	701-07-0045	70107-0045	(39.37) 1.550	(25.40) 1.000
12	701-07-0046	70107-0046	(41.91) 1.650	(27.94) 1.100
13	701-07-0047	70107-0047	(44.45) 1.750	(30.48) 1.200
14	701-07-0048	70107-0048	(46.99) 1.850	(33.02) 1.300
15	701-07-0049	70107-0049	(49.53) 1.950	(35.56) 1.400
16	701-07-0050	70107-0050	(52.07) 2.050	(38.10) 1.500
17	701-07-0051	70107-0051	(54.61) 2.150	(40.64) 1.600
18	701-07-0052	70107-0052	(57.15) 2.250	(43.18) 1.700
19	701-07-0053	70107-0053	(59.69) 2.350	(45.72) 1.800
20	701-07-0054	70107-0054	(62.23) 2.450	(48.26) 1.900
21	701-07-0055	70107-0055	(64.77) 2.550	(50.80) 2.000
22	701-07-0056	70107-0056	(67.31) 2.650	(53.34) 2.100
23	701-07-0057	70107-0057	(69.85) 2.750	(55.88) 2.200
24	701-07-0058	70107-0058	(72.39) 2.850	(58.42) 2.300
25	701-07-0059	70107-0059	(74.93) 2.950	(60.96) 2.400

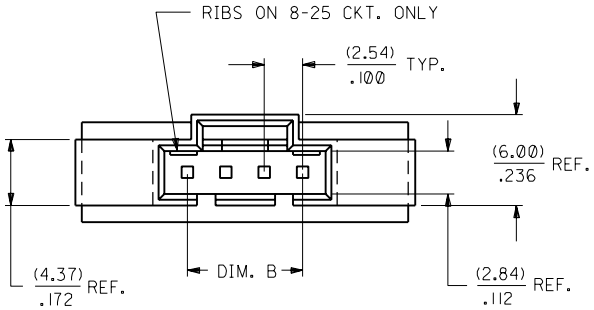

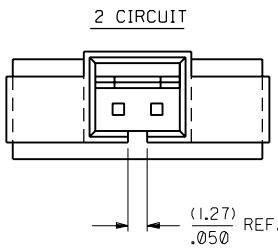

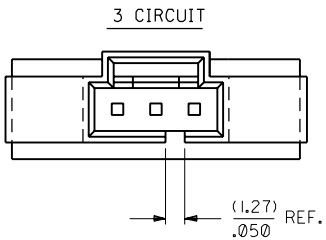

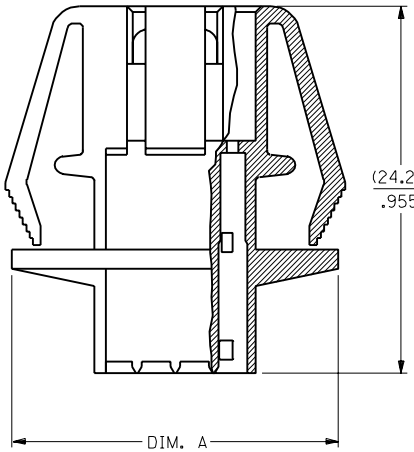

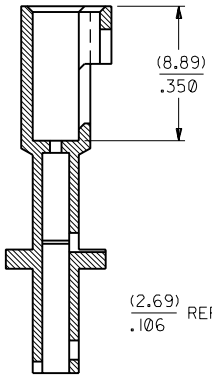

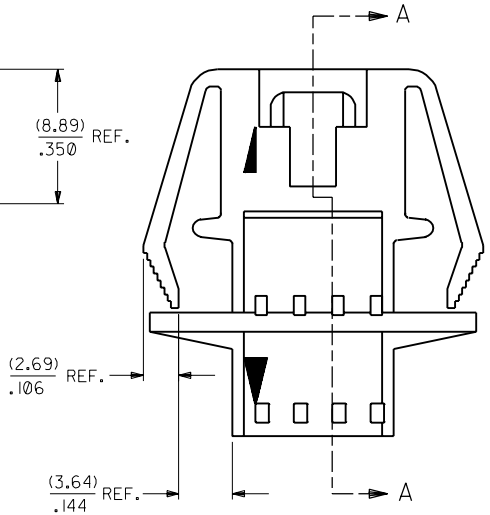

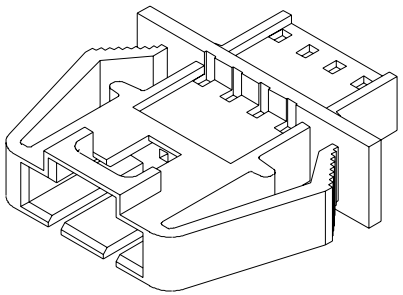

		I	ADD PKG NOTE PER UDT2000-0489 SCHAFER 99/12/1
		H	REVISED EAR DIM'S PER ECR #9533 12/1/86 MJM/JAS
J	REVISED DESIGN PER ECN UDT2000-0780 KMS 08/24/00	G	REDRAWN ON CAD ADD NEW SHEET 2 PER ECR #9280 8/21/86 MJM
LTR.	REVISIONS	LTR.	REVISIONS

DIMENSIONS SHOWN (METRIC) INCH
UNLESS OTHERWISE SPECIFIED TOLERANCES: ANGULAR ± 1/2°

		INCH	METRIC
3 PLACE	±	.010	---
2 PLACE	±	.014	± 0.25
1 PLACE		---	± 0.35

DRAFT WHERE APPLICABLE MUST REMAIN WITHIN DIMENSIONS

DRWG. BY RS | CHK'D. BY MJM
APP'D. BY WAZ | SCALE 4:1

▽ = 0 ▼ = 0 REVISE ONLY ON CAD SYSTEM

TITLE HOUSING, CONNECTOR (2.54)/.100 GRID

molex MOLEX INCORPORATED LISLE, ILL. 60532 U.S.A.

SHEET NO. 1 OF 3 | DATE 7/4/86

PART NO. | DRWG. NO. SD-70107-0036-0059

FILE NAME S70107X02 DGN

THIS DRAWING CONTAINS INFORMATION THAT IS PROPRIETARY TO MOLEX INC. AND SHOULD NOT BE USED WITHOUT WRITTEN PERMISSION.

DIV. DA | SIZE C

MFG.	SH.	REV.
	3	G
	2	J
	1	J

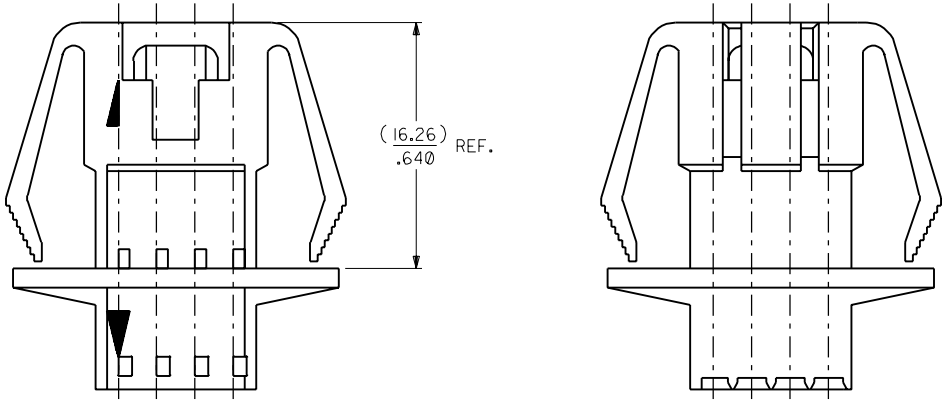

OPTIONAL CONFIGURATIONS FOR INTERNATIONAL MOLD

LTR.	REVISIONS	LTR.	REVISIONS
		G	SEE SHEET 1

DIMENSIONS SHOWN (METRIC) INCH

UNLESS OTHERWISE SPECIFIED TOLERANCES: ANGULAR ± 1/2°

		INCH	METRIC
3 PLACE	±	.010	---
2 PLACE	±	.014	± 0.25
1 PLACE		---	± 0.35

DRAFT WHERE APPLICABLE MUST REMAIN WITHIN DIMENSIONS

DRWG. BY RS | CHK'D. BY MJM
APP'D. BY WAZ | SCALE 4:1

MFG. | SH. | REV.

▽ = ▼ = REVISE ONLY ON CAD SYSTEM

TITLE HOUSING, CONNECTOR (2.54)/.100 GRID

MOLEX INCORPORATED LISLE, ILL. 60532 U.S.A.

SHEET NO. 2 | DATE 7/ 4/86

PART NO. | DRWG. NO. SD-70107-0036-0059

FILE NAME S70107X06 DGN

THIS DRAWING CONTAINS INFORMATION THAT IS PROPRIETARY TO MOLEX INC. AND SHOULD NOT BE USED WITHOUT WRITTEN PERMISSION.

DIV. DA | SIZE C

70107

70107

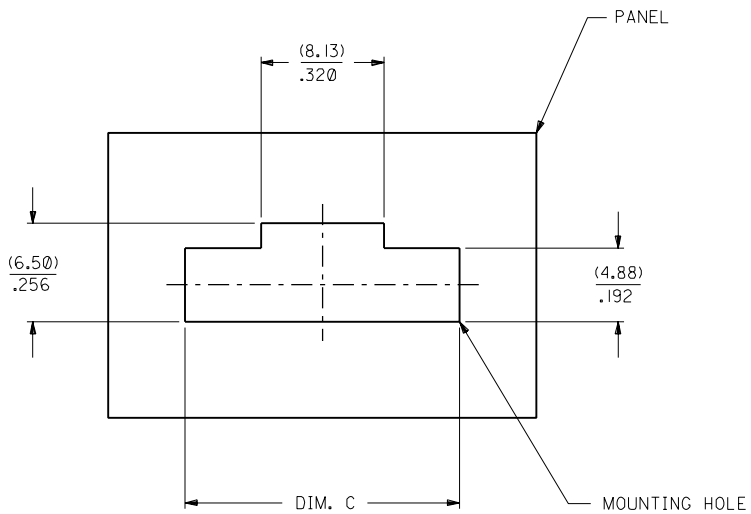

RECOMMENDED MOUNTING
HOLE LAYOUT

CKT. SIZE	EDP. NO.	ENG. NO.	C
2	701-07-0036	70107-0036	(13.08) .515
3	701-07-0037	70107-0037	(15.62) .615
4	701-07-0038	70107-0038	(18.61) .715
5	701-07-0039	70107-0039	(20.70) .815
6	701-07-0040	70107-0040	(23.24) .915
7	701-07-0041	70107-0041	(25.78) 1.015
8	701-07-0042	70107-0042	(28.32) 1.115
9	701-07-0043	70107-0043	(30.86) 1.215
10	701-07-0044	70107-0044	(33.40) 1.315
11	701-07-0045	70107-0045	(35.94) 1.415
12	701-07-0046	70107-0046	(38.48) 1.515
13	701-07-0047	70107-0047	(41.02) 1.615
14	701-07-0048	70107-0048	(43.56) 1.715
15	701-07-0049	70107-0049	(46.10) 1.815
16	701-07-0050	70107-0050	(48.64) 1.915
17	701-07-0051	70107-0051	(51.18) 2.015
18	701-07-0052	70107-0052	(53.72) 2.115
19	701-07-0053	70107-0053	(56.26) 2.215
20	701-07-0054	70107-0054	(58.80) 2.315
21	701-07-0055	70107-0055	(61.34) 2.415
22	701-07-0056	70107-0056	(63.88) 2.515
23	701-07-0057	70107-0057	(66.42) 2.615
24	701-07-0058	70107-0058	(68.96) 2.715
25	701-07-0059	70107-0059	(71.50) 2.815

70107

LTR.	REVISIONS	LTR.	REVISIONS
		G	SEE SHEET 1

DIMENSIONS SHOWN (METRIC) INCH
UNLESS OTHERWISE SPECIFIED TOLERANCES: ANGULAR ± 1/2°

	INCH	METRIC
3 PLACE	± .005	---
2 PLACE	± .01	± 0.13
1 PLACE	---	± 0.25

DRAFT WHERE APPLICABLE MUST REMAIN WITHIN DIMENSIONS

DRWG. BY RS | CHK'D. BY MJM
APP'D. BY WAZ | SCALE 4:1

MFG. | SH. | REV.

REVISE ONLY ON CAD SYSTEM

TITLE HOUSING, CONNECTOR (2.54)/.100 GRID

MOLEX INCORPORATED
LISLE, ILL. 60532 U.S.A.

SHEET NO. 3 | DATE 7/5/86

PART NO.

DRWG. NO. SD-70107-0036-0059

FILE NAME S70107X03 DGN

THIS DRAWING CONTAINS INFORMATION THAT IS PROPRIETARY TO MOLEX INC. AND SHOULD NOT BE USED WITHOUT WRITTEN PERMISSION.

DIV. DA | SIZE C