molex
one company › a world of innovation

This document was generated on 04/14/2010

PLEASE CHECK WWW.MOLEX.COM FOR LATEST PART INFORMATION

Part Number: 0192210420

Status: Active

Description: Compression Style Ring Tongue Terminal for 1 AWG Wire, Stud Size 1/4", Plated

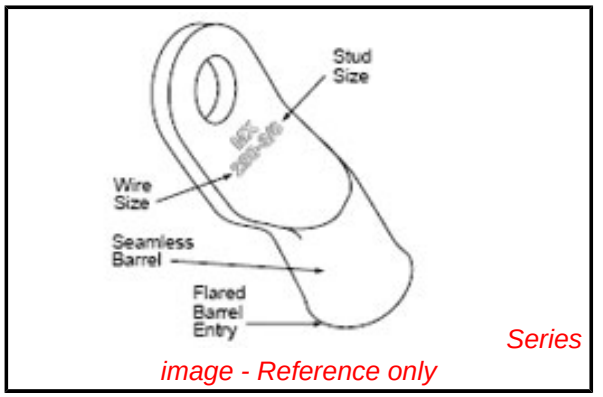

Documents:
Drawing (PDF)
RoHS Certificate of Compliance (PDF)

Agency Certification

CSA	LR18689
UL	E32244

General

Product Family	Ring and Spade Terminals
Series	19221
Comments	Heavy Duty
Crimp Quality Equipment	Yes
Mil-Spec	N/A
Product Name	Battery Cable Lug
Type	Ring

Physical

Barrel Type	Closed
Insulation	None
Material - Plating Mating	Tin
Packaging Type	Bag
Plating min: Mating (µin)	160
Plating min: Mating (µm)	4
Plating min: Termination (µin)	160
Plating min: Termination (µm)	4
Stud Size	1/4" (M6)
Termination Interface: Style	Crimp or Compression
Wire Insulation Diameter	N/A
Wire Size AWG	1
Wire Size mm²	42.4

Material Info

Old Part Number	BCL-114-PL

Reference - Drawing Numbers

Sales Drawing	SD-19221-010

EU RoHS
ELV and RoHS Compliant
REACH SVHC
Not Reviewed
Halogen-Free Status
Not Reviewed

China RoHS

Need more information on product environmental compliance?

Email productcompliance@molex.com
For a multiple part number RoHS Certificate of Compliance, click here

Please visit the Contact Us section for any non-product compliance questions.

Search Parts in this Series
19221Series

Application Tooling | **FAQ**
Tooling specifications and manuals are found by selecting the products below. Crimp Height Specifications are then contained in the Application Tooling Specification document.

Global

Description	Product #
Putt Pump Dieless Head System	0192860065
Manual tool for Crimping non-insulated 8AWG thru 4/0 Terminals	0192940008
Manual Putt Pump Hydraulic System, Die set required	0192860117
Die Set (large) for the HHLS Hydralic Crimper	0192900011

This document was generated on 04/14/2010
PLEASE CHECK WWW.MOLEX.COM FOR LATEST PART INFORMATION

13	12	11	10	9	8	7	6	5	4	3	2	1

UNPLATED MATERIAL NUMBER	UNPLATED ENG. NUMBER	UNPLATED MAT. NO. ON TAPE	UNPLATED ENG. NO. ON TAPE	PLATED MATERIAL NUMBER	PLATED ENGINEERING NUMBER	PLATED MAT. NO. ON TAPE	PLATED ENG. NO ON TAPE	SEE DETAIL	STUD SIZE	AWG WIRE RANGE	"S" ±.010/(0.25)	"L" ±.030/(0.76)	"W" ±.020/(0.50)	"C" ±.040/(1.02)	"B" ±.015/(0.38)	"T" ±.015/(0.38)
192210451	BCL-410	---	---	192210452	BCL-410-PL	---	---	---	10/(4.83)	4	.214/(5.45)	1.500/(38.10)	.531/(13.49)	.429/(10.90)	.286/(7.26)	.080/(2.03)
192210404	BCL-414	---	---	192210230	BCL-414-PL	---	---	---	1/4/(6.4)	4	.278/(7.06)	1.500/(38.10)	.531/(13.49)	.429/(10.90)	.286/(7.26)	.080/(2.03)
192210405	BCL-4516	---	---	192210231	BCL-4516-PL	190820025	BCL-4516-PLT	D	5/16/(7.9)	4	.340/(8.64)	1.500/(38.10)	.531/(13.49)	.429/(10.90)	.286/(7.26)	.080/(2.03)
192210461	BCL-4516-WP	---	---	192210460	BCL-4516-WP-PL	---	---	---	5/16/(7.9)	4	.340/(8.64)	1.531/(38.89)	.625/(15.88)	.397/(10.08)	.286/(7.26)	.080/(2.03)
192210383	BCL-438	---	---	192210232	BCL-438-PL	190820026	BCL-438-PLT	E	3/8/(9.5)	4	.400/(10.16)	1.500/(38.10)	.531/(13.49)	.429/(10.90)	.286/(7.26)	.080/(2.03)
192210458	BCL-438-WP	---	---	192210456	BCL-438-WP-PL	190820027	BCL-438-WP-PLT	E	3/8/(9.5)	4	.400/(10.16)	1.531/(38.89)	.625/(15.88)	.397/(10.08)	.286/(7.26)	.080/(2.03)
192210459	BCL-438-XWP	---	---	192210457	BCL-438-XWP-PL	---	---	---	3/8/(9.5)	4	.400/(10.16)	1.688/(42.88)	.766/(19.46)	.444/(11.28)	.286/(7.26)	.100/(2.54)
192210453	BCL-412	---	---	192210454	BCL-412-PL	---	---	---	1/2/(12.7)	4	.520/(13.21)	1.688/(42.88)	.766/(19.46)	.444/(11.28)	.286/(7.26)	.100/(2.54)
192210419	BCL-214	---	---	192210418	BCL-214-PL	190820001	BCL-214-PLT	C	1/4/(6.4)	2	.278/(7.06)	1.625/(41.28)	.625/(15.88)	.437/(11.10)	.336/(8.53)	.095/(2.41)
192210400	BCL-2516	---	---	192210233	BCL-2516-PL	190820002	BCL-2516-PLT	C	5/16/(7.9)	2	.340/(8.63)	1.625/(41.28)	.625/(15.88)	.437/(11.10)	.336/(8.53)	.095/(2.41)
192210380	BCL-238	---	---	192210235	BCL-238-PL	---	---	---	3/8/(9.5)	2	.400/(10.16)	1.625/(41.28)	.625/(15.88)	.437/(11.10)	.336/(8.53)	.095/(2.41)
192210564	BCL-238-WP	---	---	192210565	BCL-238-WP-PL	---	---	---	3/8/(9.5)	2	.400/(10.16)	1.750/(44.45)	.750/(19.05)	.474/(12.04)	.336/(8.53)	.095/(2.41)
192210399	BCL-212-WP	---	---	192210236	BCL-212-WP-PL	---	---	---	1/2/(12.7)	2	.520/(13.21)	1.750/(44.45)	.750/(19.05)	.474/(12.04)	.336/(8.53)	.095/(2.41)
192210594	BCL-110	---	---	192210595	BCL-110-PL	---	---		#10/(4.83)	1	.214/(5.45)	1.718/(43.64)	.656/(16.66)	.446/(11.33)	.360/(9.14)	.100/(2.54)
192210421	BCL-114	---	---	192210420	BCL-114-PL	---	---	---	1/4/(6.4)	1	.278/(7.06)	1.718/(43.64)	.656/(16.66)	.446/(11.33)	.360/(9.14)	.100/(2.54)
192210396	BCL-1516	---	---	192210237	BCL-1516-PL	---	---	---	5/16/(7.9)	1	.340/(8.63)	1.718/(43.64)	.656/(16.66)	.446/(11.33)	.360/(9.14)	.100/(2.54)
192210378	BCL-138	---	---	192210238	BCL-138-PL	---	---	---	3/8/(9.5)	1	.400/(10.16)	1.718/(43.64)	.656/(16.66)	.446/(11.33)	.360/(9.14)	.100/(2.54)
192210580	BCL-138-WP	---	---	192210581	BCL-138-WP-PL	---	---	---	3/8/(9.5)	1	.400/(10.16)	1.844/(46.84)	.750/(19.05)	.474/(12.04)	.360/(9.14)	.100/(2.54)
192210395	BCL-112	---	---	192210239	BCL-112-PL	---	---	---	1/2/(12.7)	1	.520/(13.21)	1.844/(46.84)	.750/(19.05)	.474/(12.04)	.360/(9.14)	.100/(2.54)

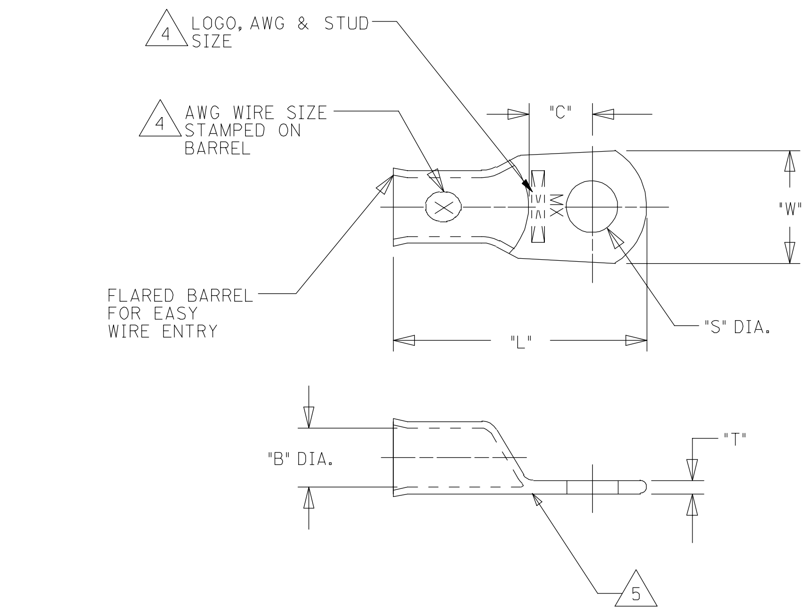

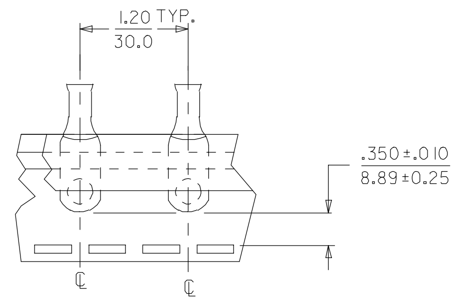

DETAIL C

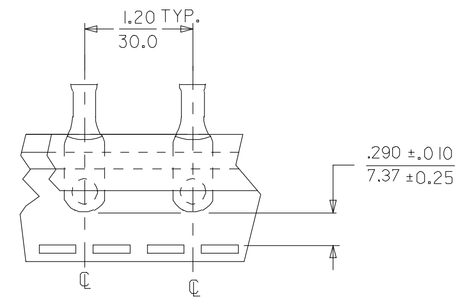

DETAIL D

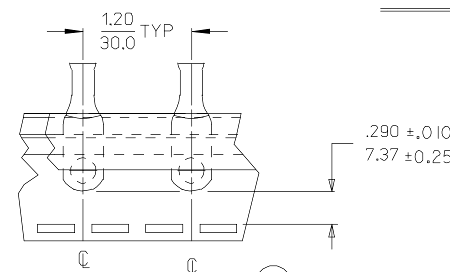

DETAIL E

NOTES:
1. FOR INSPECTION SIGHT HOLE, PLEASE CONSULT FACTORY.
2. OTHER STUD SIZES MAY BE AVAILABLE, PLEASE CONSULT FACTORY.
3. MATERIAL: COPPER
   PLATING: TIN
4. MARKINGS CAN BE AT EITHER LOCATION SHOWN.
5. IF TONGUE IS TO BE BENT AT ANY ANGLE. IT MUST BE BENT AROUND A RADIUS ONE HALF THE TONGUE THICKNESS.

REV	DESCRIPTION
C	ADDED DETAIL E EC NO: ETC2006-0005 DRWN: LSHADECK 2005/11/23 CH'KD: RDEROSS 2005/11/23 APPR: JPAWLICK 2005/11/23

QUALITY SYMBOLS
▼=0
Ⓒ=0

GENERAL TOLERANCES (UNLESS SPECIFIED)

	mm	INCH
4 PLACES	± ---	± ---
3 PLACES	± ---	± ---
2 PLACES	± ---	± ---
1 PLACE	± ---	± ---
ANGULAR ± ---°		

DRAFT WHERE APPLICABLE MUST REMAIN WITHIN DIMENSIONS

DIMENSION STYLE: IN/MM
SCALE: ---
DESIGN UNITS: INCH
THIRD ANGLE PROJECTION

DRAWN BY: BE — DATE: 06/26/02
CHECKED BY: HB — DATE: 06/26/02
APPROVED BY: RD — DATE: 06/26/02

TITLE: EYELET STYLE COPPER TERMINALS 4, 2, & 1 AWG LUGS

molex MOLEX INCORPORATED

MATERIAL NO.: SEE CHART
DOCUMENT NO.: SD-19221-010
SHEET NO.: 1 OF 1
SIZE: C

THIS DRAWING CONTAINS INFORMATION THAT IS PROPRIETARY TO MOLEX INCORPORATED AND SHOULD NOT BE USED WITHOUT WRITTEN PERMISSION

tb_frame_C_P_ME_T
Rev. D 2004/04/02