Silicon NPN Power Transistors 2SC5359

DESCRIPTION

- With TO-3PL package
- Complement to type 2SA1987

APPLICATIONS

- Power amplifier applications
- Recommend for 100W high fidelity audio frequency amplifier output stage

PINNING

PIN	DESCRIPTION
1	Base
2	Collector;connected to mounting base
3	Emitter

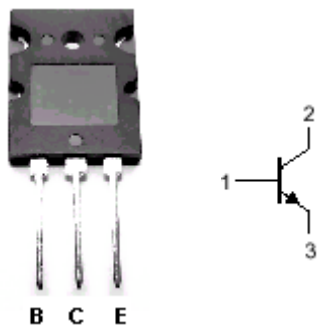

Fig.1 simplified outline (TO-3PL) and symbol

Absolute maximum ratings(Tc=25℃)

SYMBOL	PARAMETER	CONDITIONS	VALUE	UNIT
V_{CBO}	Collector-base voltage	Open emitter	230	V
V_{CEO}	Collector-emitter voltage	Open base	230	V
V_{EBO}	Emitter-base voltage	Open collector	5	V
I_C	Collector current		15	A
I_B	Base current		1.5	A
P_C	Collector power dissipation	T_C=25℃	180	W
T_j	Junction temperature		150	℃
T_{stg}	Storage temperature		-55~150	℃

Silicon NPN Power Transistors 2SC5359

CHARACTERISTICS

Tj=25℃ unless otherwise specified

SYMBOL	PARAMETER	CONDITIONS	MIN	TYP.	MAX	UNIT
$V_{(BR)CEO}$	Collector-emitter breakdown voltage	I_C=50mA; I_B=0	230			V
V_{CEsat}	Collector-emitter saturation voltage	I_C=8 A;I_B=0.8A		0.4	3.0	V
V_{BE}	Base-emitter voltage	I_C=7A ; V_{CE}=5V		1.0	1.5	V
I_{CBO}	Collector cut-off current	V_{CB}=230V ;I_E=0			5	μ A
I_{EBO}	Emitter cut-off current	V_{EB}=5V; I_C=0			5	μ A
h_{FE-1}	DC current gain	I_C=1A ; V_{CE}=5V	55		160	
h_{FE-2}	DC current gain	I_C=7A ; V_{CE}=5V	35			
f_T	Transition frequency	I_C=1A ; V_{CE}=5V		30		MHz
C_{OB}	Output capacitance	I_E=0; V_{CB}=10V;f=1MHz		200		pF

◆ **h_{FE-1} classifications**

R	O
55-110	80-160

PACKAGE OUTLINE

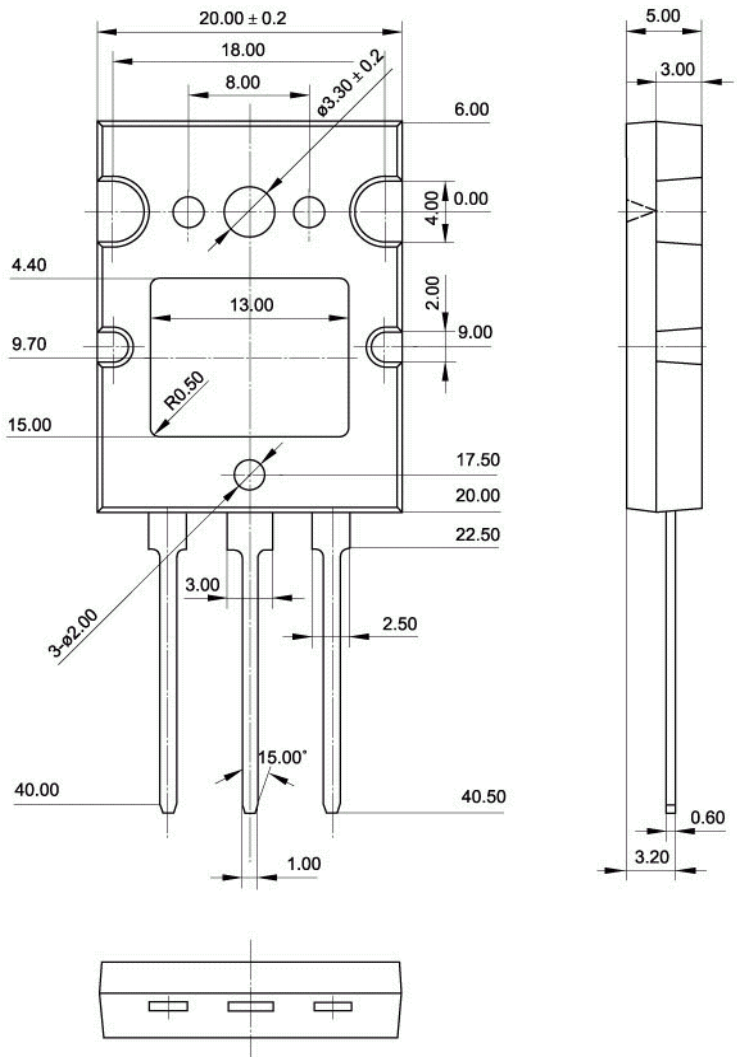

Fig.2 Outline dimensions (unindicated tolerance:±0.50mm)

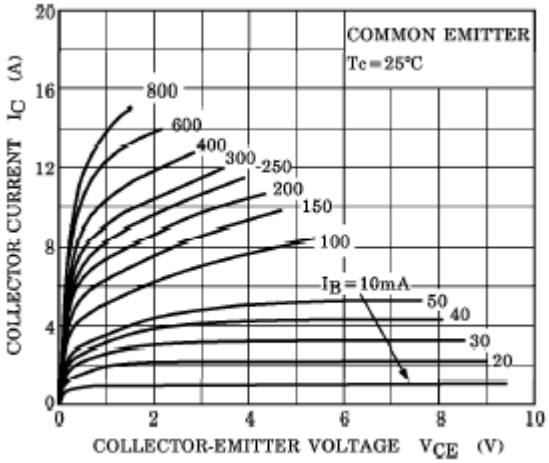

Fig.3 Static Characteristic

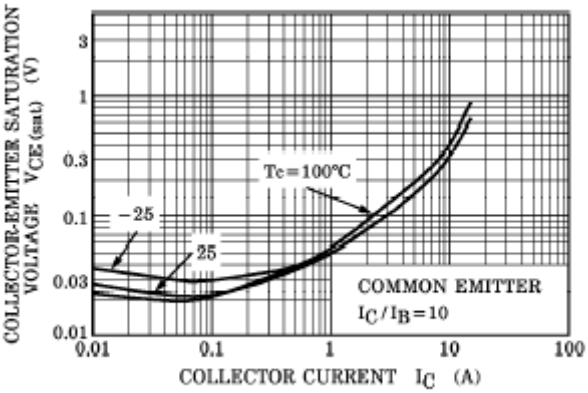

Fig.4 Collector-Emitter Saturation Voltage

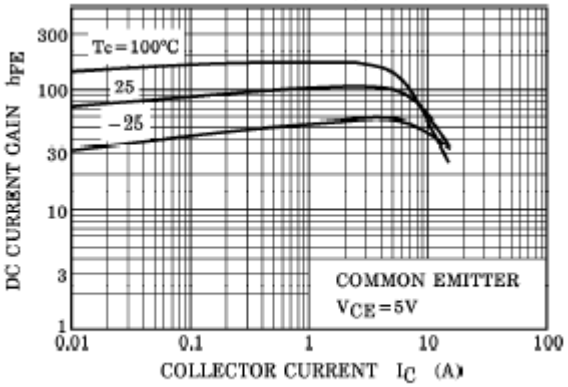

Fig.5 DC current Gain

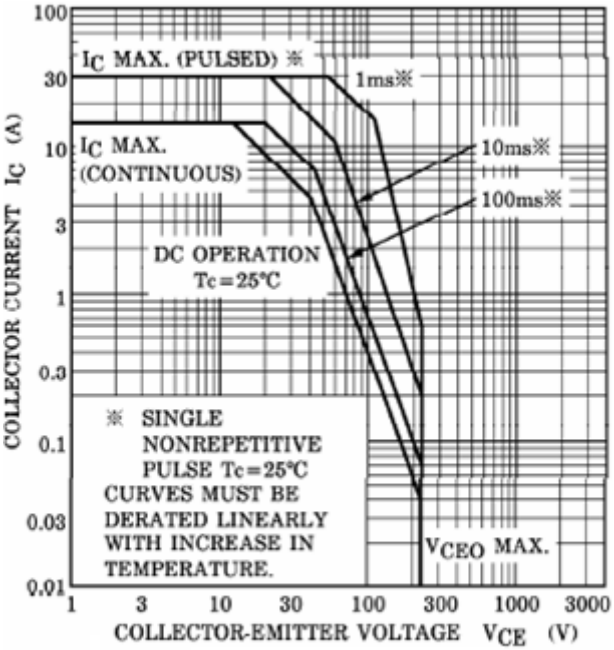

Fig.6 Safe Operating Area